Technical Information
Cerabar S PMC71, PMP71, PMP75

Process pressure measurement

Pressure transmitter with ceramic and metal sensors

Application

The device is used for the following measuring tasks:
- Absolute pressure and gauge pressure in gases, steams or liquids in all areas of process engineering and process measurement technology
- Level, volume or mass measurements in liquids
- High process temperature
  - without diaphragm seals up to 150 °C (302 °F)
  - with typical diaphragm seals up to 400 °C (752 °F)
- High pressure up to 700 bar (10500 psi)
- MID part certificate as per OIML R117-1 Edition 2007 (E) and EN 12405-1/A1 Edition 2006

Your benefits

- Very good reproducibility and long-term stability
- High reference accuracy down to 0.025%
- Turn down up to 100:1, higher on request
- Used for process pressure monitoring up to SIL 3, certified to IEC 61508 by TÜV SÜD
- High level of safety during operation thanks to function monitoring from the measuring cell to the electronics
- The patented TempC membrane for diaphragm seal reduces the measured error caused by environmental and process temperature influences to a minimum
- Simple electronics exchange guaranteed with HistoROM®/M-DAT
- Standardized platform for differential pressure, hydrostatics, and pressure (Deltabar S – Deltapilot S – Cerabar S)
- Simple, fast commissioning through a user interface designed for real-world applications
- Extensive diagnostic functions

Endress+Hauser
People for Process Automation

Table of contents

About this document 4
Symbols 4
Terms and abbreviations 6

Function and system design 7
Device selection 7
Measuring principle 8
Level measurement (level, volume and mass) 9
Applications suitable for custody transfer measurement 9
Communication protocol 10

Input 11
Measured variable 11
Measuring range 11

Output 14
Output signal 14
Signal range – 4 to 20 mA HART 14
Signal on alarm 14
Load – 4 to 20 mA HART 15
Dead time, time constant 16
Dynamic behavior: current output 16
Dynamic behavior: digital output (HART electronics) 16
Dynamic behavior: PROFIBUS PA 17
Dynamic behavior: FOUNDATION Fieldbus 17
Damping 18
Alarm current 18
Firmware Version 18
Protocol-specific data 18

Power supply 22
Terminal assignment 22
Supply voltage 23
Current consumption 23
Electrical connection 24
Terminals 24
Cable entry 24
Device plug connectors 24
Cable specification 26
Residual ripple 26
Overvoltage protection (optional) 26
Influence of power supply 26

Performance characteristics of the ceramic process isolating diaphragm 27
Reference operating conditions 27
Uncertainty of measurement for small absolute pressure ranges 27
Influence of the installation position 27
Resolution 27
Reference accuracy 27
Thermal change of the zero output and the output span . . . 28
Total performance 28
Long-term stability 28
Total error 29
Warm-up period 29

Performance characteristics of the metallic process isolating diaphragm 30
Reference operating conditions 30
Uncertainty of measurement for small absolute pressure ranges 30
Influence of the installation position 30
Resolution 30
Reference accuracy – PMP71 30
Reference accuracy – PMP75 31
Thermal change of the zero output and the output span – PMP71 and PMP75 32
Total performance – PMP71 33
Long-term stability 33
Total error - PMP71 33
Warm-up period – PMP71, PMP75 33

Installation 34
General installation instructions 34
Measuring arrangement for devices without diaphragm seals – PMC71, PMP71 34
Measuring arrangement for devices with diaphragm seals – PMP75 34
Wall and pipe-mounting 34
Heat insulation – PMC71 high-temperature version 35
"Separate housing" version 36
Turning the housing 37
Oxygen applications 38
Silicone-free applications 38
Ultrapure gas applications 38
Applications with hydrogen 38

Environment 39
Ambient temperature range 39
Storage temperature range 39
Degree of protection 39
Climate class 39
Vibration resistance 40
Electromagnetic compatibility 40

Process 41
Process temperature limits 41
Pressure specifications 42

Mechanical construction 43
Device height 43
T14 housing, optional display on the side 44
T17 housing (hygienic), optional display on the side 45
Process connections for PMC71 with internal process isolating diaphragm 46
Process connections for PMC71 with internal process isolating diaphragm 47
Process connections for PMC71 with internal process isolating diaphragm 48
Process connections for PMC71 with internal process isolating diaphragm - height H 48
Process connections for PMC71 with flush-mounted process isolating diaphragm 49
Process connections for PMC71 with flush-mounted process

isolating diaphragm 50
Process connections for PMC71 with flush-mounted process isolating diaphragm - height H 50
Process connections for PMC71 with flush-mounted process isolating diaphragm 51
Process connections for PMC71 with flush-mounted process isolating diaphragm 52
Process connections for PMC71 with flush-mounted process isolating diaphragm 53
Process connections for PMC71 with flush-mounted process isolating diaphragm - height H 53
Hygienic process connections for PMC71 with flush-mounted process isolating diaphragm 54
Process connections for PMP71 with internal process isolating diaphragm 56
Process connections for PMP71 with internal process isolating diaphragm 57
Process connections for PMP71 with internal process isolating diaphragm 58
Process connections for PMP71 with flush-mounted process isolating diaphragm 59
Process connections for PMP71 with flush-mounted process isolating diaphragm 61
Process connections for PMP71 with flush-mounted process isolating diaphragm 62
Process connections for PMP71 with flush-mounted process isolating diaphragm 63
Process connections for PMP71 with flush-mounted process isolating diaphragm 64
Process connections for PMP71 65
Process connections for PMP71 66
PMP75 basic device 67
Process connections for PMP75 with flush-mounted process isolating diaphragm 68
Process connections for PMP75 with flush-mounted process isolating diaphragm 69
Process connections for PMP75 with flush-mounted process isolating diaphragm 70
Process connections for PMP75 with flush-mounted process isolating diaphragm 71
Hygienic process connections for PMP75 with flush-mounted process isolating diaphragm 72
Hygienic process connections for PMP75 with flush-mounted process isolating diaphragm 73
Hygienic process connections for PMP75 with flush-mounted process isolating diaphragm 75
Process connections for PMP75 with flush-mounted process isolating diaphragm 77
Process connections for PMP75 with flush-mounted process isolating diaphragm 79
Process connections for PMP75 with flush-mounted process isolating diaphragm 82
Separate housing:
wall and pipe mounting with mounting bracket 84
Materials not in contact with process 85
Materials in contact with process 88

Operability 90
Operating concept 90
Local operation 90
Remote operation 92
System integration 94

Planning instructions, diaphragm seal systems 95
Applications 95
Design and operation mode 96
Diaphragm seal filling oils 97
Cleaning instructions 98
Installation instructions 98
Vacuum applications 100

Certificates and approvals 101
CE mark 101
C-tick mark 101
Ex approvals 101
Suitability for hygienic processes 101
Functional safety SIL/ IEC 61508 Declaration of Conformity (optional) 101
Overfill prevention 101
CRN approvals 102
Standards and guidelines 102
Pressure Equipment Directive (PED) 102
Marine approval 102
Drinking water approval 102
Approvals for custody transfer 102
MID Parts Certificate 102
Classification of process sealing between electrical systems and (flammable or combustible) process fluids in accordance with ANSI/ISA 12.27.01 103
Inspection certificate 103
Calibration 104
Certificate of Compliance ASME BPE 104

Ordering information 105
Configuration data sheet 105

Additional documentation 107
Field of Activities 107
Technical Information 107
Operating Instructions 107
Brief Operating Instructions 107
Functional safety manual (SIL) 107
Overfill prevention 107
Safety Instructions 107
Installation/Control Drawings 109

Registered trademarks 110
HART® 110
PROFIBUS® 110
FOUNDATION™ Fieldbus 110

About this document

Symbols

Warning symbols

Symbol	Meaning
DANGER A0011189-EN	**DANGER!** This symbol alerts you to a dangerous situation. Failure to avoid this situation will result in serious or fatal injury.
WARNING A0011190-EN	**WARNING!** This symbol alerts you to a dangerous situation. Failure to avoid this situation can result in serious or fatal injury.
CAUTION A0011191-EN	**CAUTION!** This symbol alerts you to a dangerous situation. Failure to avoid this situation can result in minor or moderate injury.
NOTICE A0011192-EN	**NOTE!** This symbol contains information on procedures and other facts which do not result in personal injury.

Electrical symbols

Symbol	Meaning
A0018335	**Direct current** A terminal to which DC voltage is applied or through which direct current flows.
A0018336	**Alternating current** A terminal to which alternating voltage is applied or through which alternating current flows.
A0018337	**Direct current and alternating current** ▪ A terminal to which alternating voltage or DC voltage is applied. ▪ A terminal through which alternating current or direct current flows.
A0018338	**Ground connection** A grounded terminal which, as far as the operator is concerned, is grounded via a grounding system.
A0018339	**Protective ground connection** A terminal that must be connected to ground prior to establishing any other conections.
A0011201	**Equipotential connection** A connection that must be connected to the plant grounding system: This may be a potential equalization line or a star grounding system depending on national or company codes of practice.

Tool symbols

Symbol	Meaning
A0011219	Phillips head screwdriver
A0011220	Flat blade screwdriver
A0013442	Torx screwdriver
A0011222	Hexagon wrench
A0011221	Allen key

Symbols for certain types of information

Symbol	Meaning
A0011182	**Allowed** Indicates procedures, processes or actions that are allowed.
A0011183	**Preferred** Indicates procedures, processes or actions that are preferred.
A0011184	**Forbidden** Indicates procedures, processes or actions that are forbidden.
A0011193	**Tip** Indicates additional information.
A0015483	**Reference to documentation** Refers to the corresponding device documentation.
A0015484	**Reference to page** Refers to the corresponding page number.
A0015486	**Reference to diagrams** Refers to the corresponding graphic number and page number.
1. , 2. , ...	Series of steps
A0015488	**Help in the event of a problem**

Symbols in graphics

Symbol	Meaning
1, 2, 3, 4, ...	Numbering for main positions
1. , 2. , ...	Series of steps
A, **B**, **C**, **D**, ...	Views
A-A, **B-B**, ...	Sections
A0011187	**Hazardous area** Indicates a hazardous area.
A0011188	Safe area (non-hazardous area) Indicates a non-hazardous area.

Terms and abbreviations

Term/abbreviation	Explanation
MWP	The MWP (maximum working pressure) for the individual sensors depends on the lowest-rated element, with regard to pressure, of the selected components, i.e. the process connection has to be taken into consideration in addition to the measuring cell. Also observe pressure-temperature dependency. For the relevant standards and additional notes, see the "→ 📄 42" section.
OPL	The OPL (over pressure limit = sensor overload limit) for the sensor depends on the lowest-rated element, with regard to pressure, of the selected components, i.e. the process connection must be taken into consideration in addition to the measuring cell. Also observe pressure-temperature dependency. For the relevant standards and additional notes, see the "→ 📄 42" section.
LRL	Lower range limit
URL	Upper range limit
LRV	Lower range value
URV	Upper range value
TD	**Turn down**
Case 1 (1 bar (15 psi) measuring cell): ▪ |Lower range value (LRV)| ≤ |Upper range value (URV)| *Example:* ▪ Lower range value (LRV) = 0 bar ▪ Upper range value (URV) = 0.5 bar (7.5 psi) ▪ Nominal value (URL) = 1 bar (15 psi) *Turn down:* ▪ TD = URL / |URV| = 2:1 *Set span:* ▪ URV − LRV = 0.5 bar (7.5 psi) This span is based on the zero point.	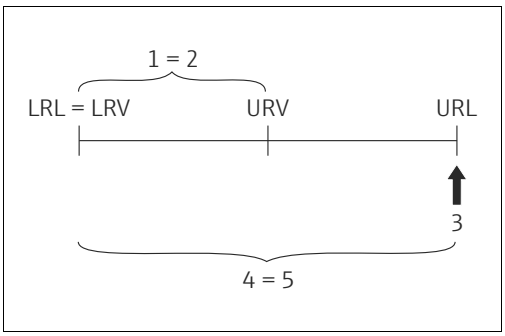 A0019780
Case 2 (1 bar (15 psi) measuring cell): ▪ |Lower range value (LRV)| ≤ |Upper range value (URV)| *Example:* ▪ Lower range value (LRV) = 0 bar ▪ Upper range value (URV) = 0.5 bar (7.5 psi) ▪ Nominal value (URL) = 1 bar (15 psi) *Turn down:* ▪ TD = URL / |URV| = 2:1 *Set span:* ▪ URV − LRV = 0.5 bar (7.5 psi) This span is based on the zero point.	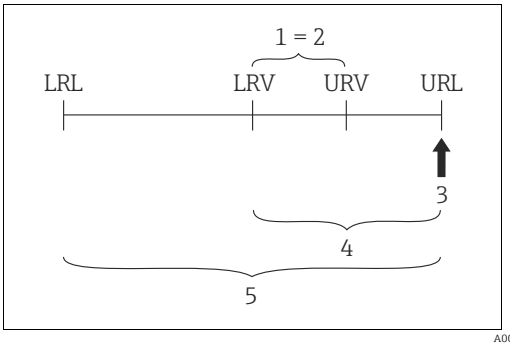 A0019783
Case 3 (1 bar (15 psi) measuring cell): ▪ Lower range value (LRV)| ≥ |Upper range value (URV)| *Example:* ▪ Lower range value (LRV) = −0.6 bar (−9 psi) ▪ Upper range value (URV) = 0 bar ▪ Nominal value (URL) = 1 bar (15 psi) *Turn down:* ▪ TD = URL / |LRV| = 1.67:1 *Set span:* ▪ URV − LRV = 0.6 bar (9 psi) This span is based on the zero point.	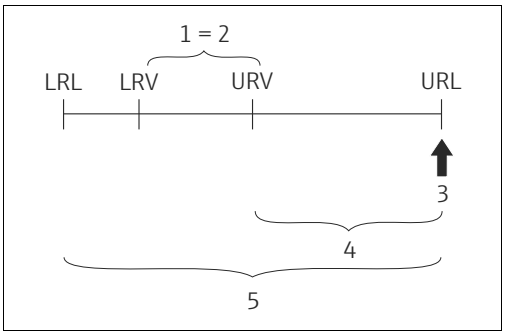 A0016451 *1 Set span* *2 Zero-based span* *3 Nominal value≙ Upper range limit (URL)* *4 Nominal measuring range* *5 Sensor measuring range*

Function and system design

Cerabar S	PMC71	PMP71	PMP75
	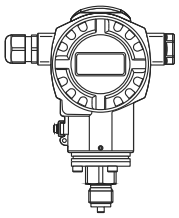 A0020461 With capacitance measuring cell and ceramic process isolating diaphragm (Ceraphire®)	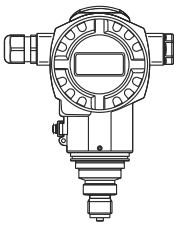 A0020463 With piezoresistive measuring cell and metallic welded process isolating diaphragm	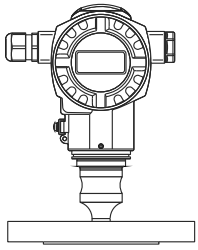 A0020464 With diaphragm seal
Field of application	– Gauge pressure and absolute pressure – Level		
Process connections	– Diverse thread – DN 25 – DN 80 – ASME 1 ½" – 4" – JIS 50 A – 100 A	– Diverse thread – DN 25 – DN 80 – ASME 1 ½" – 4" – JIS 25 A – 100 A – Oval flange adapter – Prepared for diaphragm seal mount	– Wide range of diaphragm seals
Measuring ranges	From –100/0 to 100 mbar (–1.5/0 to 1.5 psi) to –1/0 to 40 bar (–15/0 to 600 psi)	From –400/0 to 400 mbar (–6/0 to 6 psi) to –1/0 to 700 bar (–15/0 to 10500 psi)	From –400/0 to 400 mbar (–6/0 to 6 psi) to –1/0 to 400 bar (–15/0 to 6000 psi)
OPL	Max. 60 bar (900 psi)	Max. 1050 bar (15750 psi)	Max. 600 bar (9000 psi)
Process temperature range	–25 to +125°C (-13 to +257 °F)/ –20 to +150 °C (-4 to 302 °F)[1]	–40 to +125 °C (-40 to +257 °F)	-70 to 400 °C (-94 to 752 °F) Dependent on the filling oil
Ambient temperature range	▪ Without LCD display: –40 to +85 °C (–40 to +185 °F)[2] ▪ With LCD display: –20 to +70 °C (–4 to +158 °F) ▪ Separate housing: -20 to +50 °C (-4 to +122 °F) ▪ Diaphragm seal systems depending on the version		
Reference accuracy	– Up to ±0.05 % of the set span – PLATINUM version: up to ±0.025 % of the set span		Up to ±0.075 % of the set span

Supply voltage	– Version for non-hazardous areas:
	  – 4...20 mA HART: 10.5 to 45 V DC
	  – PROFIBUS PA and FOUNDATION Fieldbus: 9 to 32 V DC
	– Ex ia: 10.5 to 30 V DC		

Output	4 to 20 mA with superimposed HART protocol, PROFIBUS PA or FOUNDATION Fieldbus		
Options	– PMP71, PMP75: gold-rhodium coated process isolating diaphragm – PMP71, PMP75: NACE-compliant materials – PMC71, PMP71, PMP75: inspection certificate 3.1 – HistoROM®/M-DAT memory module – Separate housing		
Specialties	– Metal-free measurement with PVDF connection – Special cleaning of the transmitter to remove paint-wetting substances, for use in paint shops	– Process connections with minimum oil volume – Gas-tight, elastomer-free	– Wide range of diaphragm seals – For high media temperatures – Process connections with minimum oil volume – Completely welded versions

1) High-temperature version see product configurator "Additional option 1" or "Additional option 2" ordering feature, option "T".

2) PMP71 and PMP75: lower temperatures on request

Measuring principle

Ceramic process isolating diaphragm used for PMC71 (Ceraphire®)

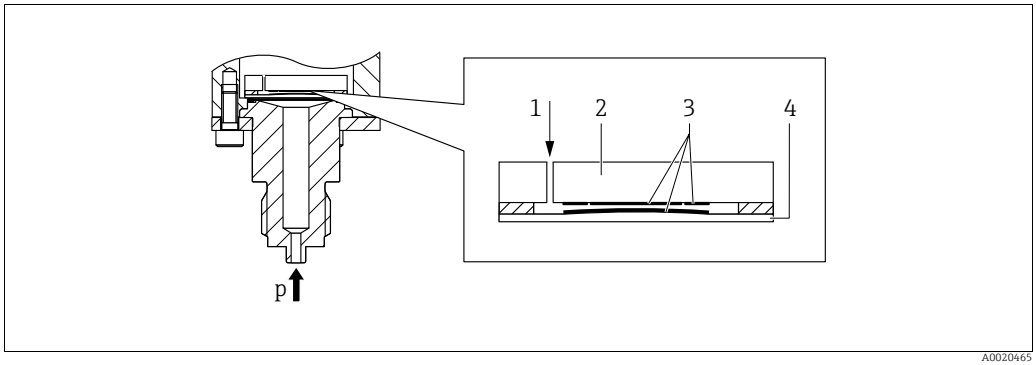

A0020465

Ceramic sensor

1 *Air pressure (gauge pressure sensors)*
2 *Ceramic substrate*
3 *Electrodes*
4 *Ceramic process isolating diaphragm*

The ceramic sensor is a dry sensor, i.e. the process pressure acts directly on the robust ceramic process isolating diaphragm and deflects it. A pressure-dependent change in capacitance is measured at the electrodes of the ceramic substrate and the process isolating diaphragm. The measuring range is determined by the thickness of the ceramic process isolating diaphragm.

Advantages:
- Guaranteed overload resistance up to 40 times the nominal pressure (see column "OPL" in table on Page 11)
- Thanks to ultrapure 99.9% ceramic (Ceraphire®, see also "www.endress.com/ceraphire")
  - extremely high chemical stability, comparable with Alloy
  - less relaxation
  - high mechanical stability
- Suitable for vacuums
- Secondary containment for enhanced integrity
- Process temperatures up to 150 °C (302 °F)

Metallic process isolating diaphragm used for PMP71 and PMP75

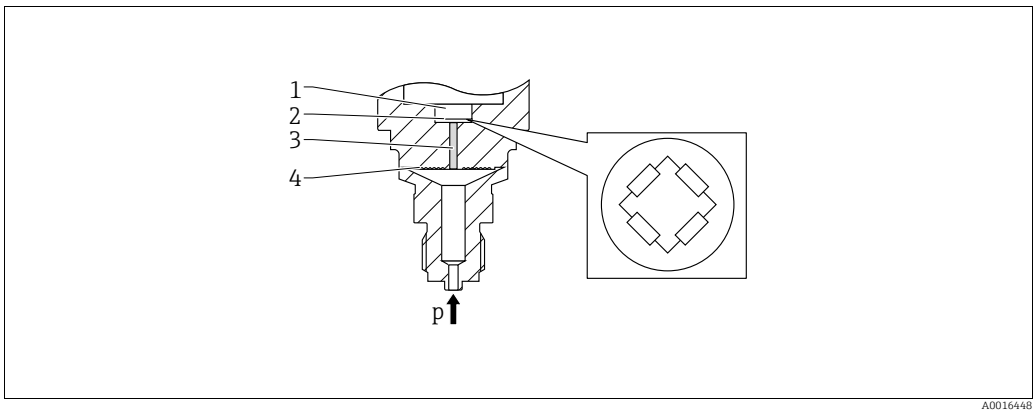

A0016448

Metal sensor

1 *Silicon measuring element, substrate*
2 *Wheatstone bridge*
3 *Channel with fill fluid*
4 *Metallic process isolating diaphragm*

PMP71

The operating pressure deflects the process isolating diaphragm and a fill fluid transfers the pressure to a resistance bridge (semiconductor technology). The pressure-dependent change in the bridge output voltage is measured and evaluated.

Advantages:
- Can be used for process pressures up to 700 bar (10500 psi) absolute pressure
- High long-term stability
- Guaranteed overload resistance up to 4 times the nominal pressure
- Secondary containment for enhanced integrity
- Significantly less thermal effect compared to diaphragm seal systems

PMP75

The operating pressure acts on the process isolating diaphragm of the diaphragm seal and is transferred to the process isolating diaphragm of the sensor by a diaphragm seal fill fluid. The process isolating diaphragm is deflected and a fill fluid transfers the pressure to a resistance measuring bridge. The pressure-dependent change in the bridge output voltage is measured and evaluated.

Advantages:
- Depending on the version, can be used for process pressures up to 400 bar (6000 psi) and extreme process temperatures
- High long-term stability
- Guaranteed overload resistance up to 4 times the nominal pressure
- Secondary containment for enhanced integrity

Level measurement (level, volume and mass)

Design and operation mode

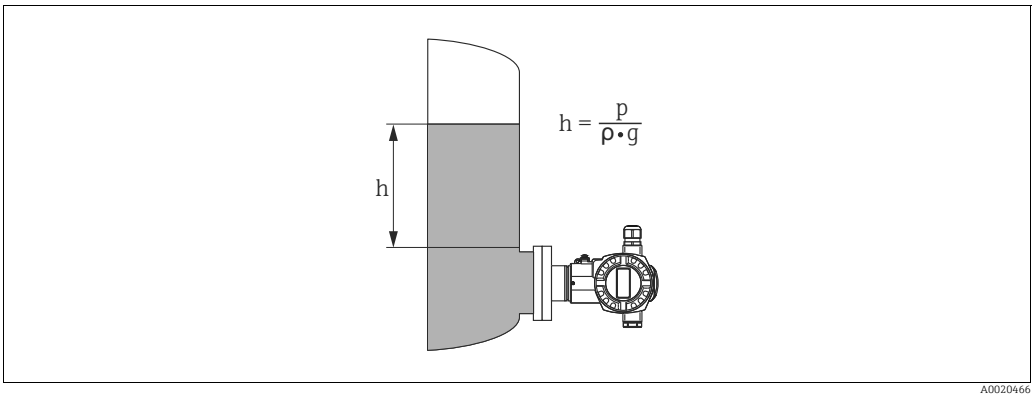

Level measurement

h	*Height (level)*
p	*Pressure*
ρ	*Density of the medium*
g	*Gravitation constant*

Your benefits

- Selection of the level operating mode which is optimum for your application in the device software.
- Volume and mass measurements in any tank shapes by means of a freely programmable characteristic curve.
- Choice of diverse level units with automatic unit conversion.
- A specific unit can be defined.
- Has a wide range of uses, even in the following cases:
  - in the event of foam formation
  - in tanks with agitators of screen fittings
  - in the event of liquid gases

Applications suitable for custody transfer measurement

The Parts Certificate is issued on the basis of the following standards:
- WELMEC guide 8.8 "General and Administrative Aspects of the Voluntary System of Modular Evaluation of Measuring instruments under the MID".
- OIML R117-1 Edition 2007 (E) "Dynamic measuring systems for liquids other than water".
- EN 12405-1/A1 Edition 2006 "Gas meters – Conversion devices – Part 1: Volume conversion".

Communication protocol

- 4 to 20 mA with HART communication protocol
- PROFIBUS PA
  - The Endress+Hauser devices meet the requirements of the FISCO model.
  - Due to the low current consumption of 13 mA ± 1 mA, the following number of devices can be operated on one bus segment if installing as per FISCO:
    - up to 7 Cerabar S for Ex ia, CSA IS and FM IS applications
    - up to 27 Cerabar S for all other applications, e.g. in non-hazardous areas, Ex nA etc.

  Further information on PROFIBUS PA can be found in Operating Instructions BA00034S "PROFIBUS DP/PA: Guidelines for planning and commissioning" and in the PNO Guideline.
- FOUNDATION Fieldbus
  - The Endress+Hauser devices meet the requirements of the FISCO model.
  - Due to the low current consumption of 15.5 mA ± 1 mA, the following number of devices can be operated on one bus segment if installing as per FISCO:
    - up to 6 Cerabar S for Ex ia, CSA IS and FM IS applications
    - up to 24 Cerabar S for all other applications, e.g. in non-hazardous areas, Ex nA etc.

  Further information on FOUNDATION Fieldbus, such as requirements for bus system components can be found in Operating Instructions BA00013S "FOUNDATION Fieldbus Overview".

Input

Measured variable

Absolute pressure and gauge pressure, from which level (level, volume or mass) is derived

Measuring range

PMC71 – with ceramic process isolating diaphragm (Ceraphire®) for gauge pressure

Nominal value	Range limit		Smallest calibratable span[1]	MWP	OPL	Vacuum resistance	Option [2]
	lower (LRL) [bar (psi)]	upper (URL) [bar (psi)]	[bar (psi)]	[bar (psi)]	[bar (psi)]	[bar_{abs} (psi_{abs})]	
100 mbar (1.5 psi)	−0.1 (−1.5)	+0.1 (+1.5)	0.005 (0.075)	2.7 (40.5)	4 (60)	0.7 (10.5)	1C
250 mbar (3.75 psi)	−0.25 (−4)	+0.25 (+4)	0.005 (0.075)	3.3 (49.5)	5 (75)	0.5 (7.5)	1E
400 mbar (6 psi)	−0.4 (−6)	+0.4 (+6)	0.005 (0.075)	5.3 (79.5)	8 (120)	0	1F
1 bar (15 psi)	−1 (−15)	+1 (+15)	0.01 (0.15)	6.7 (100.5)	10 (150)	0	1H
2 bar (30 psi)	−1 (−15)	+2 (+30)	0.02 (0.3)	12 (180)	18 (270)	0	1K
4 bar (60 psi)	−1 (−15)	+4 (+60)	0.04 (0.6)	16.7 (250.5)	25 (375)	0	1M
10 bar (150 psi)	−1 (−15)	+10 (+150)	0.1 (1.5)	26.7 (400.5)	40 (600)	0	1P
40 bar (600 psi)	−1 (−15)	+40 (+600)	0.4 (6)	40 (600)	60 (900)	0	1S

1) Turn down > 100:1 on request or can be set at the device

2) Product Configurator, "Sensor range; Sensor over pressure limit" ordering feature

PMC71 – with ceramic process isolating diaphragm (Ceraphire®) for absolute pressure

Nominal value	Range limit		Smallest calibratable span[1]	MWP	OPL	Vacuum resistance	Option [2]
	lower (LRL) [bar (psi)]	upper (URL) [bar (psi)]	[bar (psi)]	[bar (psi)]	[bar (psi)]	[bar_{abs} (psi_{abs})]	
100 mbar (1.5 psi)	0	+0.1 (+1.5)	0.005 (0.075)	2.7 (40.5)	4 (60)	0	2C
250 mbar (3.75 psi)	0	+0.25 (+4)	0.005 (0.075)	3.3 (49.5)	5 (75)	0	2E
400 mbar (6 psi)	0	+0.4 (+6)	0.005 (0.075)	5.3 (79.5)	8 (120)	0	2F
1 bar (15 psi)	0	+1 (+15)	0.01 (0.15)	6.7 (100.5)	10 (150)	0	2H
2 bar (30 psi)	0	+2 (+30)	0.02 (0.3)	12 (180)	18 (270)	0	2K
4 bar (60 psi)	0	+4 (+60)	0.04 (0.6)	16.7 (250.5)	25 (375)	0	2M
10 bar (150 psi)	0	+10 (+150)	0.1 (1.5)	26.7 (400.5)	40 (600)	0	2P
40 bar (600 psi)	0	+40 (+600)	0.4 (6)	40 (600)	60 (900)	0	2S

1) Turn down > 100:1 on request or can be set at the device

2) Product Configurator, "Sensor range; Sensor over pressure limit" ordering feature

PMP71 and PMP75 – metallic process isolating diaphragm for gauge pressure

Nominal value	Range limit		Smallest calibratable span[1]	MWP	OPL	Vacuum resistance [2]	Option [3]
	lower (LRL)	upper (URL)				Synthetic oil/ Inert oil	
	[bar (psi)]	[bar (psi)]	[bar (psi)]	[bar (psi)]	[bar (psi)]	[bar_{abs} (psi_{abs})]	
400 mbar (6 psi)	−0.4 (−6)	+0.4 (+6)	0.005 (0.075)	4 (60)	6 (90)	0.01/0.04 (0.15/0.6)	1F
1 bar (15 psi)	−1 (−15)	+1 (+15)	0.01 (0.15)	6.7 (100)	10 (150)		1H
2 bar (30 psi)	−1 (−15)	+2 (+30)	0.02 (0.3)	13.3 (200)	20 (300)		1K
4 bar (60 psi)	−1 (−15)	+4 (+60)	0.04 (0.6)	18.7 (280.5)	28 (420)		1M
10 bar (150 psi)	−1 (−15)	+10 (+150)	0.1 (1.5)	26.7 (400.5)	40 (600)		1P
40 bar (600 psi)	−1 (−15)	+40 (+600)	0.4 (6)	100 (1500)	160 (2400)		1S
100 bar (1500 psi)	−1 (−15)	+100 (+1500)	1.0 (15)	100 (1500)	400 (6000)		1U
400 bar (6000 psi)	−1 (−15)	+400 (+6000)	4.0 (60)	400 (6000)	600 (9000)		1W
700 bar (10500)[4]	−1 (−15)	+700 (+10500)	7.0 (105)	700 (10500)	1050 (15750)		1X

1) Turn down > 100:1 on request or can be set at the device

2) The vacuum resistance applies for the measuring cell under reference operating conditions. The pressure and temperature application limits of the selected filling oil must also be observed for the PMP75. → 97, "Filling oil" section.

3) Product Configurator, "Sensor range; Sensor over pressure limit" ordering feature

4) PMP71 only, PMP75 on request

PMP71 and PMP75 – metallic process isolating diaphragm for absolute pressure

Nominal value	Range limit		Smallest calibratable span[1]	MWP	OPL	Vacuum resistance [2]	Option [3]
	lower (LRL)	upper (URL)				Synthetic oil/ Inert oil	
	[bar (psi)]	[bar (psi)]	[bar (psi)]	[bar (psi)]	[bar (psi)]	[bar_{abs} (psi_{abs})]	
400 mbar (6 psi)	0	+0.4 (+6)	0.005 (0.075)	4 (60)	6 (90)	0.01/0.04 (0.15/0.6)	2F
1 bar (15 psi)	0	+1 (+15)	0.01 (0.15)	6.7 (100)	10 (150)		2H
2 bar (30 psi)	0	+2 (+30)	0.02 (0.3)	13.3 (200)	20 (300)		2K
4 bar (60 psi)	0	+4 (+60)	0.04 (0.6)	18.7 (280.5)	28 (420)		2M
10 bar (150 psi)	0	+10 (+150)	0.1 (1.5)	26.7 (400.5)	40 (600)		2P
40 bar (600 psi)	0	+40 (+600)	0.4 (6)	100 (1500)	160 (2400)		2S
100 bar (1500 psi)	0	+100 (+1500)	1.0 (15)	100 (1500)	400 (6000)		2U
400 bar (6000 psi)	0	+400 (+6000)	4.0 (60)	400 (6000)	600 (9000)		2W
700 bar (10500)[4]	0	+700 (+10500)	7.0 (105)	700 (10500)	1050 (15750)		2X

1) Turn down > 100:1 on request or can be set at the device

2) The vacuum resistance applies for the measuring cell under reference operating conditions. The pressure and temperature application limits of the selected filling oil must also be observed for the PMP75. → 97, "Filling oil" section.

3) Product Configurator, "Sensor range; Sensor over pressure limit" ordering feature

4) PMP71 only, PMP75 on request

PMP71 - metallic process diaphragms for absolute pressure with MID parts certificate

Nominal value	Range limit		Min. WP for gas applications suitable for custody transfer measurement	Min. WP for liquid applications suitable for custody transfer measurement	MWP	OPL	Vacuum resistance [1] Silicone oil/inert oil	Option [2]
[bar (psi)]	lower (LRL)[3] [bar (psi)]	upper (URL)[4] [bar (psi)]	[bar (psi)]	[bar (psi)]	[bar (psi)]	[bar (psi)]	[bar (psi)]	
10 (150)	0	+10 (150)	0.5 (7.5)	0.5 (7.5)	26.7 (400.5)	40 (600)	0.01/0.04 (0.15/1)	MP
50 (750)	0	+50 (750)	10 (150)	2.5 (37.5)	100 (1500)	400 (6000)	0.01/0.04 (0.15/1)	MT
100 (1500)	0	+100 (1500)	5 (75)	5 (75)	100 (1500)	400 (6000)	0.01/0.04 (0.15/1)	MU

1) The vacuum resistance applies for the measuring cell under reference operating conditions.

2) Product Configurator, "Sensor range; Sensor over pressure limit" ordering feature

3) By default, the device is set to a lower sensor limit of 0 bar. Please specify in the order if the lower sensor limit is to be set to a different default value.

4) Max. WP for gas and liquid applications suitable for custody transfer measurement

Output

Output signal

- 4 to 20 mA with superimposed digital communication protocol HART, 2-wire
- Digital communication signal PROFIBUS PA (Profile 3.0), 2-wire
  - Signal coding: Manchester Bus Powered (MBP): Manchester II
  - Transmission rate: 31.25 KBit/s voltage mode
- Digital communication signal FOUNDATION Fieldbus, 2-wire
  - Signal coding: Manchester Bus Powered (MBP): Manchester II
  - Transmission rate: 31.25 KBit/s voltage mode

Output	Operation (→ 🗎 90 ff)		
	External + LCD	Internal + LCD	Internal
	Option [1]		
4 to 20mA HART	A	B	C
4 to 20mA HART, Li=0	D	E	F
PROFIBUS PA	M	N	O
FOUNDATION Fieldbus	P	Q	R

1) Product Configurator, "Output; Operation" ordering feature

Signal range – 4 to 20 mA HART

3.8 mA to 20.5 mA

Signal on alarm

As per NAMUR NE43

- 4 to 20 mA HART
  Options:
  - Max. alarm: can be set from 21 to 23 mA (factory setting: 22 mA)
  - Hold measured value: last measured value is held
  - Min. alarm: 3.6 mA
- PROFIBUS PA: can be set in the Analog Input block,
  Options: Last Valid Out Value (factory setting), Fail Safe Value, Status Bad
- FOUNDATION Fieldbus: can be set in the Analog Input block,
  Options: Last Good Value, Fail Safe Value (factory setting), Wrong Value

Load – 4 to 20 mA HART

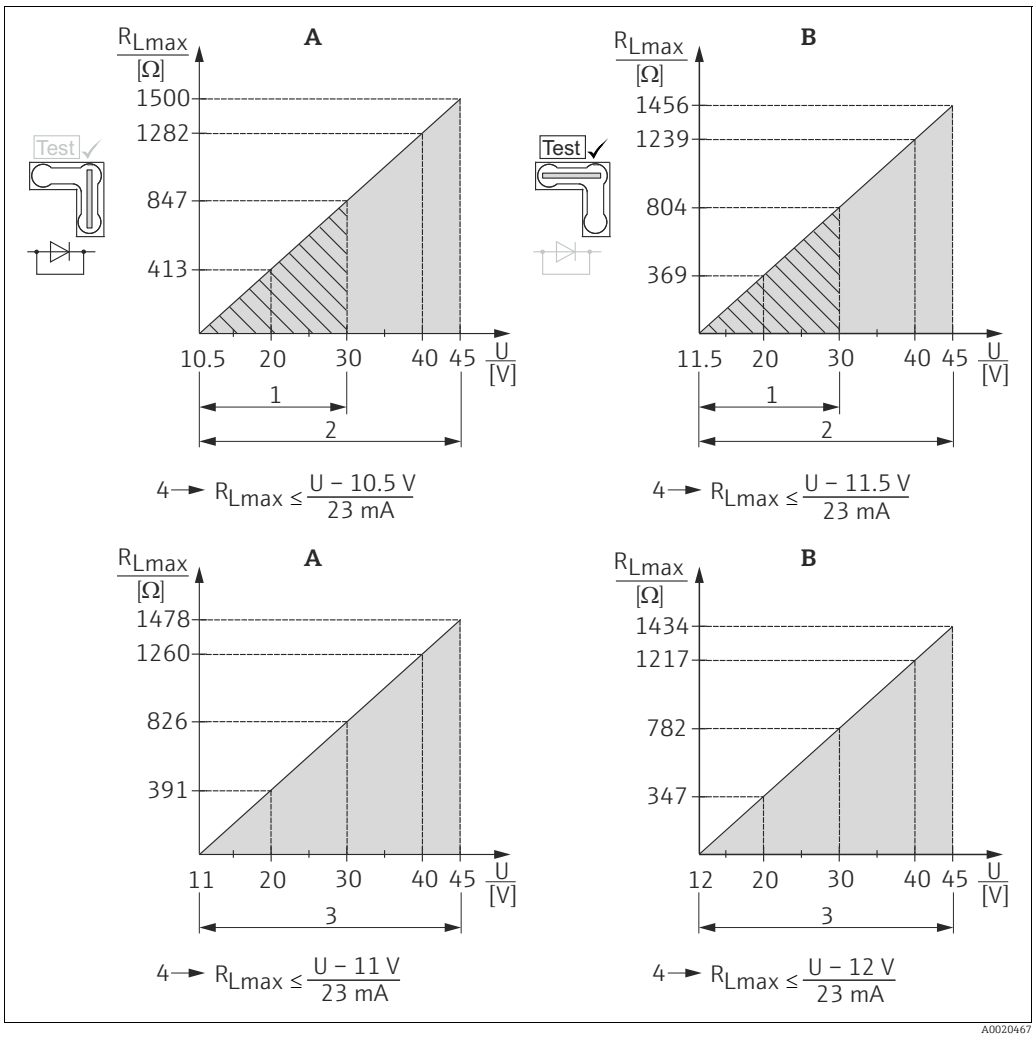

Load diagram, observe the position of the jumper and the explosion protection. (See also Page 23, "Measuring a 4 to 20 mA test signal" section.)

A	*Jumper for 4 to 20 mA test signal set to "Non-test" position*
B	*Jumper for 4 to 20 mA test signal set to "Test" position*
1	*Power supply 10.5 (11.5) to 30 V DC for 1/2 G, 1 GD, 1/2 GD, FM IS, CSA IS, IECEx ia, NEPSI Ex ia*
2	*Power supply 10.5 (11.5) to 45 V DC for devices for non-hazardous areas, 1/2 D, 1/3 D, 2 G Ex d, 3 G Ex nA, FM XP, FM DIP, FM NI, CSA XP, CSA dust ignition proof, NEPSI Ex d*
3	*Power supply 11 (12) to 45 V DC for PMC71, Ex d[ia], NEPSI Ex d[ia]*
4	*R_{Lmax} maximum load resistance*
U	*Supply voltage*

When operating via a handheld terminal or via a PC with an operating program, a minimum communication resistance of 250 Ω must exist within the loop.

Dead time, time constant

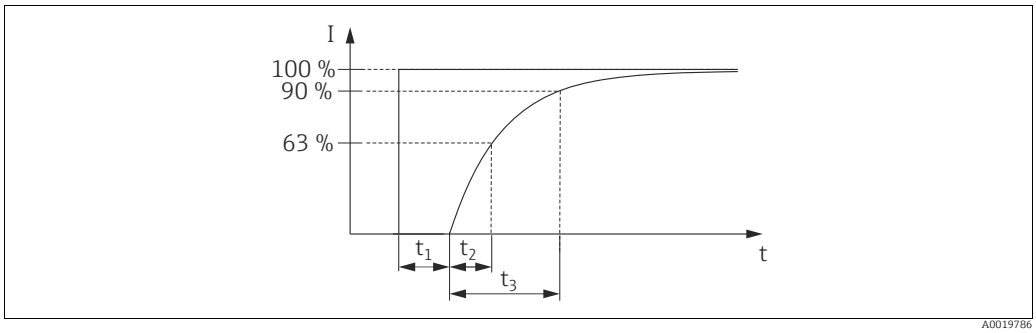

Presentation of the dead time and the time constant

Dynamic behavior: current output

Type		Measuring cell	Dead time (t_1) [ms]	Time constant T63 (=t_2) [ms]	Time constant T90 (=t_3) [ms]
PMC71	Max.	all	90	120	276
PMP71	Max.	▪ 400 mbar (6 psi) ▪ ≥ 1 bar (15 psi)	45	▪ 70 ▪ 35	▪ 161 ▪ 81
PMP75	max.	PMP71 + influence of the diaphragm seal			

Dynamic behavior: digital output (HART electronics)

A typical burst rate of 300 ms results in the following behavior:

Type		Measuring cell	Dead time (t_1) [ms]	Dead time (t1) [ms] + time constant T63 (=t_2) [ms]	Dead time (t1) [ms] + time constant T90 (=t_3) [ms]
PMC71	Min.	all	250	370	436
	Max.		1050	1170	1236
PMP71	Min.	▪ 400 mbar (6 psi) ▪ ≥ 1 bar (15 psi)	205	▪ 275 ▪ 240	▪ 321 ▪ 241
	Max.	▪ 400 mbar (6 psi) ▪ ≥ 1 bar (15 psi)	1005	▪ 1075 ▪ 1040	▪ 1121 ▪ 1041
PMP75	Max.	PMP71 + influence of the diaphragm seal			

Reading cycle

- Acyclic: max. 3/s, typically 1/s (depending on command # and number of preambles)
- Cyclic (burst): max. 3/s, typically 2/s

The device commands the BURST MODE function for cyclic value transmission via the HART communication protocol.

Cycle time (update time)

Cyclic (burst): min. 300 ms

Response time

- Acyclic: min. 330 ms, typical 590 ms (depends on command # and number of preambles)
- Cyclic (burst): min. 160 ms, typically 350 ms (depending on command # and number of preambles)

Dynamic behavior: PROFIBUS PA

A typical PLC cycle time of 1 s results in the following behavior:

Type		Measuring cell	Dead time (t_1) [ms]	Dead time (t1) [ms] + time constant T63 (=t_2) [ms]	Dead time (t1) [ms] + time constant T90 (=t_3) [ms]
PMC71	Min.	all	125	245	311
	Max.		1325	1445	1511
PMP71	Min.	▪ 400 mbar (6 psi) ▪ ≥ 1 bar (15 psi)	80	▪ 150 ▪ 115	▪ 196 ▪ 116
	Max.	▪ 400 mbar (6 psi) ▪ ≥ 1 bar (15 psi)	1280	▪ 1350 ▪ 1315	▪ 1396 ▪ 1316
PMP75	Max.	PMP71 + influence of the diaphragm seal			

Reading cycle (PLC)

- Cyclic: typically 30/s (depending on the number and type of the function blocks used in the closed-control loop)
- Acyclic: typically 25/s

Cycle time (update time)

min. 200 ms
The cycle time in a bus segment in cyclic data communication depends on the number of devices, on the segment coupler used and on the internal PLC cycle time. A new value can be determined up to 5 times per second.

Response time

- Cyclic: approx. 10 to 13 ms (depends on Min. Slave Interval)
- Acyclic: approx. 60 to 70 ms (depends on Min. Slave Interval)

Dynamic behavior: FOUNDATION Fieldbus

A typical configuration for the macro cycle time (host system) of 1 s results in the following behavior:

Type		Measuring cell	Dead time (t_1) [ms]	Dead time (t1) [ms] + time constant T63 (=t_2) [ms]	Dead time (t1) [ms] + time constant T90 (=t_3) [ms]
PMC71	Min.	all	135	255	321
	Max.		1135	1255	1321
PMP71	Min.	▪ 400 mbar (6 psi) ▪ ≥ 1 bar (15 psi)	90	▪ 160 ▪ 125	▪ 206 ▪ 126
	Max.	▪ 400 mbar (6 psi) ▪ ≥ 1 bar (15 psi)	1090	▪ 1160 ▪ 1125	▪ 1206 ▪ 1126
PMP75	Max.	PMP71 + influence of the diaphragm seal			

Reading cycle

- Cyclic: max. 10/s (depending on the number and type of function blocks used in the closed-control loop)
- Acyclic: typical 10/s

Cycle time (update time)

Cyclic: min. 100 ms

Response time

- Cyclic: max. 20 ms (for standard bus parameter settings)
- Acyclic: typical 100 ms (for standard bus parameter settings)

Damping

A damping affects all outputs (output signal, display).

- Via onsite display, handheld terminal or PC with operating program, continuous from 0 to 999 s
- Additionally for HART and PROFIBUS PA: via DIP switch on the electronic insert, switch position "on" = set value and "off"
- Factory setting: 2 s

Alarm current

Designation	Option [1]
Min alarm current	J
HART burst mode PV	
Min alarm current + HART burst mode PV	

1) Product Configurator, "Additional options 1" and "Additional options 2" ordering feature

Firmware Version

Designation	Option [1]
02.20.zz, HART, DevRev22	72
02.11.zz, HART, DevRev21	73
04.00.zz, FF, DevRev07	74
04.01.zz, PROFIBUS PA, DevRev03	75
02.10.zz, HART, DevRev21	76
03.00.zz, FF, DevRev06	77
04.00.zz, PROFIBUS PA	78

1) Product Configurator, "Firmware Version" ordering feature

Protocol-specific data

HART

Manufacturer ID	17 (11 hex)
Device Type Code	24 (18 hex)
Device Revision	▪ 21 (15 hex) - SW version 02.1y.zz - HART spezification 5 ▪ 22 (16 hex) - SW version 02.2y.zz - HART spezification 7
HART specification	▪ 5 ▪ 7
DD Revision	▪ 4 (russian in language selection) for device revision 21 ▪ 3 (netherlands in language selection) for device revision 21 ▪ 1 for device revision 22
Device description files (DTM, DD)	Information and files can be found: ▪ www.endress.com ▪ www.hartcomm.org
HART load	Min. 250 Ω
HART device variables	The measured values can be freely assigned to the device variables: **Measured values for PV (primary variable)** ▪ Pressure ▪ Level ▪ Tank content **Measured values for SV, TV (second and third variable)** ▪ Pressure **Measured values for QV (fourth variable)** ▪ Temperature
Supported functions	▪ Burst mode ▪ Additional Transmitter Status ▪ Device Locking ▪ Alternative operating modes

PROFIBUS PA

Manufacturer ID	17 (11 hex)
Ident number	1541 hex
Profile Version	3.0 ▪ SW Version 03.00.zz ▪ SW Version 04.00.zz 3.02 ▪ SW Version 04.01.zz (Device Revision 3) Compatibility SW version 03.00.zz and higher.
GSD Revision	▪ 4 (SW Version 3.00.zz and 4.00.zz) ▪ 5 (Device Revision 3)
DD Revision	▪ 1 (SW Version 3.00.zz and 4.00.zz) ▪ 1 (Device Revision 3)
GSD File	Information and files can be found: ▪ www.endress.com ▪ www.profibus.org
DD Files	
Output values	**Measured values for PV (via Analog Input Function Block)** ▪ Pressure ▪ Level ▪ Tank content **Measured values for SV** ▪ Pressure ▪ Temperature
Input values	Input value sent from PLC, can be shown on display
Supported functions	▪ Identification & Maintenance Simple device identification via control system and nameplate ▪ Condensed status[1)] ▪ Automatic ident number adaptation and switchable to following ident numbers[1)]: – 9700: Profile-specific transmitter identification number with the "Classic" or "Condensed" status". – 1501: Compatibility mode for the old Cerabar S generation (PMC731, PMP731, PMC631, PMP635). – 1541: Identification number for the new Cerabar S generation (PMC71, PMP71, PMP75). ▪ Device locking: The device can be locked by hardware or software.

1) Only with Profile Version 3.02

FOUNDATION Fieldbus

Manufacturer ID	452B48 hex
Device type	1007 hex
Device Revision	▪ 6 - SW Version 03.00.zz ▪ 7 - SW Version 04.00.zz (FF-912)
DD Revision	▪ 3 (Device Revision 6) ▪ 2 (Device Revision 7)
CFF Revision	▪ 4 (Device Revision 6) ▪ 1 (Device Revision 7)
DD Files	Information and files can be found: ▪ www.endress.com ▪ www.fieldbus.org
CFF Files	
Device Tester Version (ITK Version)	▪ 5.0 (Device Revision 6) ▪ 6.01 (Device Revision 7)
ITK Test Campaign Number	▪ IT054600 (Device Revision 6) ▪ IT085500 (Device Revision 7)
Link Master (LAS) capable	Yes

Choose from "Link Master" and "Basic Device"	Yes, default is Basic Device
Node Address	Default: 247 (F7 hex)
Supported functions	Field Diagnostics Profile [1)] Following methods are supported: ▪ Restart ▪ Configure error as warning or alarm ▪ HistoROM ▪ Peakhold ▪ AlarmInfo ▪ SensorTrimm
Number of VCRs	▪ 44 (Device Revision 6) ▪ 24 (Device Revision 7)
Number of Link Objects in VFD	50

1) Only with FF912

Virtual communication references (VCRs)

	Device Revision 6	Device Revision 7
Permanent Entries	44	1
Client VCRs	0	0
Server VCRs	5	10
Source VCRs	8	43
Sink VCRs	0	0
Subscriber VCRs	12	43
Publisher VCRs	19	43

Link settings

	Device Revision 6	Device Revision 7
Slot time	4	4
Min. inter PDU delay	12	10
Max. response delay	10	10

Transducer Blocks

Block	Content	Output values
TRD1 Block	Contains all parameters related to the measurement	▪ Pressure or level (channel 1) ▪ Process temperature (channel 2)
Service Block	Contains service information	▪ Pressure after damping (channel 3) ▪ Pressure peakhold indicator (channel 4) ▪ Counter for max. pressure transgressions (channel 5)
Diagnostic Block	Contains diagnostic information	Error code via DI channels (channel 0 to 16)
Display Block	Contains parameters to configure the onsite display	No output values

Function blocks

Block	Content	Number of blocks	Execution time		Functionality	
			Device Revision 6	Device Revision 7	Device Revision 6	Device Revision 7
Resource Block	The Resource Block contains all the data that uniquely identify the device. It is an electronic version of a nameplate of the device.	1			enhanced	enhanced
Analog Input Block 1 Analog Input Block 2	The AI Block receives the measuring data from the Sensor Block, (selectable via a channel number) and makes the data available to other function blocks at its output. Enhancement: digital outputs for process alarms, fail safe mode	2	45 ms	45 ms [1)]	enhanced	enhanced
Digital Input Block	This block contains the discrete data of the Diagnose Block (selectable via a channel number 0 to 16) and provides them for other blocks at the output.	1	40 ms	30 ms	standard	enhanced
Digital Output Block	This block converts the discrete input and thus initiates an action (selectable via a channel number) in the DP Flow Block or in the Service Block. Channel 1 resets the counter for max. pressure transgressions.	1	60 ms	40 ms	standard	enhanced
PID Block	The PID Block serves as a proportional-integral-derivative controller and is used almost universally for closed-loop-control in the field including cascade and feedforward. Input IN can be indicated on the display. The selection is performed in the Display Block (DISPLAY_MAIN_LINE_CONTENT).	1	120 ms	70 ms	standard	enhanced
Arithmetic Block	This block is designed to permit simple use of popular measurement math functions. The user does not have to know how to write equations. The math algorithm is selected by name, chosen by the user for the function to be performed.	1	50 ms	40 ms	standard	enhanced
Input Selector Block	The Input Selector Block facilitates the selection of up to four inputs and generates an output based on the configured action. This block normally receives its inputs from AI Blocks. The block performs maximum, minimum, average and 'first good' signal selection. Inputs IN1 to IN4 can be indicated on the display. The selection is performed in the Display Block (DISPLAY_MAIN_LINE_CONTENT).	1	35 ms	35 ms	standard	enhanced
Signal Characterizer Block	The Signal Characterizer Block has two sections, each with an output that is a non-linear function of the respective input. The non-linear function is generated by a single look-up table with 21 arbitrary x-y pairs.	1	30 ms	40 ms	standard	enhanced
Integrator Block	The Integrator Block integrates a variable as a function of the time or accumulates the counts from a Pulse Input Block. The block may be used as a totalizer that counts up until reset or as a batch totalizer that has a setpoint, where the integrated or accumulated value is compared to pre-trip and trip settings, generating a binary signal when the setpoint is reached.	1	35 ms	40 ms	standard	enhanced
Analog Alarm Block	This block contains all process alarm conditions (working like a comparator) and represents them at the output.	1	35 ms	35 ms	standard	enhanced

Additional function block information:

Instantiate Function Block	YES	YES
Number of additional instantiate blocks	11	5

1) Without trend and alarm reports

Power supply

⚠ WARNING

Electrical safety is compromised by an incorrect connection!

- When using the measuring device in hazardous areas, installation must comply with the corresponding national standards and regulations and the Safety Instructions or Installation or Control Drawings → 107 ff. All explosion protection data are given in separate documentation which is available upon request. The Ex documentation is supplied as standard with all devices approved for use in explosion hazardous area → 107 ff.
- Devices with integrated overvoltage protection must be grounded. → 26
- Protective circuits against reverse polarity, HF influences and overvoltage peaks are installed.

Terminal assignment

4 to 20 mA HART

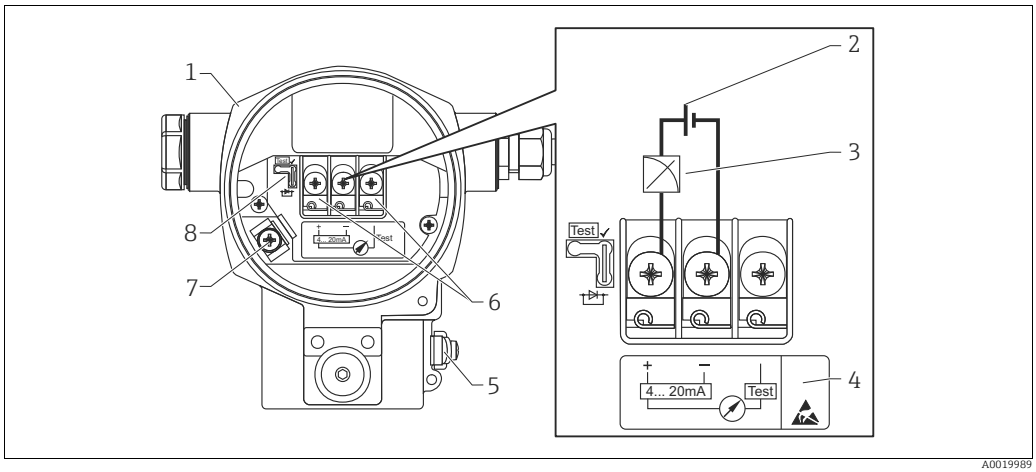

Terminal assignment, shown here with aluminum housing (T14)

1 *Housing*
2 *Supply voltage*
3 *4 to 20 mA*
4 *Devices with integrated overvoltage protection are labeled "OVP" (overvoltage protection) here.*
5 *External ground terminal*
6 *4 to 20 mA test signal between positive and test terminal*
7 *Internal ground terminal*
8 *Jumper for 4 to 20 mA test signal → 23, "Measuring a 4 to 20 mA test signal" section.*

PROFIBUS PA and FOUNDATION Fieldbus

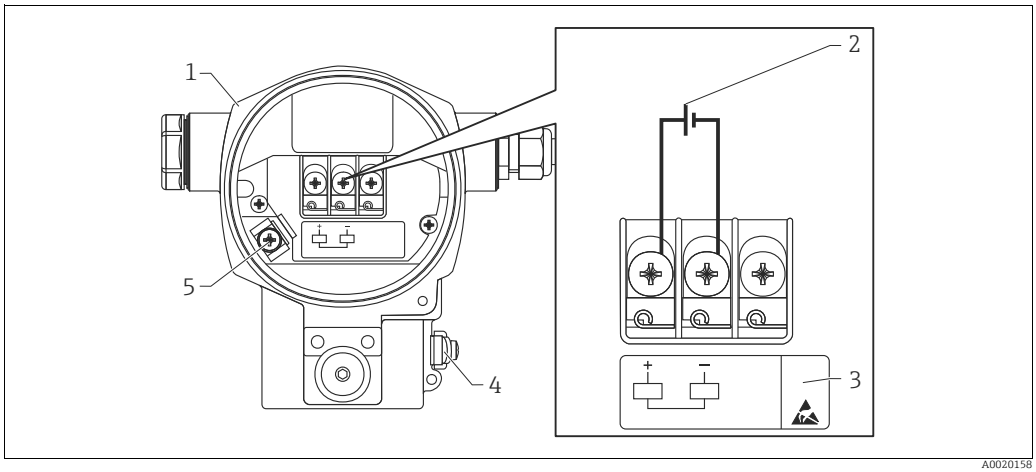

Terminal assignment, shown here with aluminum housing (T14)

1 *Housing*
2 *Supply voltage*
3 *Devices with integrated overvoltage protection are labeled OVP (overvoltage protection) here.*
4 *External ground terminal*
5 *Internal ground terminal*

Supply voltage

4 to 20 mA HART

Version	Jumper for 4 to 20 mA test signal	Supply voltage
Non-hazardous area	in "Test" position	11.5 to 45 V DC
	in "Non-test" position	10.5 to 45 V DC
Intrinsically safe	in "Test" position	11.5 to 30 V DC
	in "Non-test" position	10.5 to 30 V DC
▪ Other types of protection ▪ Devices without certificate	in "Test" position	11.5 to 45 V DC (versions with 35 V DC plug-in connection)
	in "Non-test" position	10.5 to 45 V DC (versions with 35 V DC plug-in connection)

Measuring a 4 to 20 mA test signal

A 4 to 20 mA test signal may be measured via the positive and test terminal without interrupting the measurement. The minimum supply voltage of the device can be reduced by simply changing the position of the jumper. As a result, operation is also possible with lower voltage sources. Observe the position of the jumper in accordance with the following table.

Jumper position for test signal	Designation
	– Measuring 4 to 20 mA test signal via the plus and test terminal: possible. (Thus, the output current can be measured without interruption via the diode.) – Delivery status – Minimum supply voltage: 11.5 V DC
	– Measuring 4 to 20 mA test signal via the plus and test terminal: not possible. – Minimum supply voltage: 10.5 V DC

PROFIBUS PA

- Version for non-hazardous areas: 9 to 32 V DC

FOUNDATION Fieldbus

- Version for non-hazardous areas: 9 to 32 V DC

Current consumption

- PROFIBUS PA: 13 mA ± 1 mA, switch-on current corresponds to IEC 61158-2, Clause 21
- FOUNDATION Fieldbus: 15.5 mA ± 1 mA, switch-on current corresponds to IEC 61158-2, Clause 21

Electrical connection

PROFIBUS PA

The digital communication signal is transmitted to the bus via a 2-wire connection. The bus also provides the power supply. For further information on the network structure and grounding, and for further bus system components such as bus cables, see the relevant documentation, e.g. Operating Instructions BA00034S "PROFIBUS DP/PA: Guidelines for planning and commissioning" and the PNO Guideline.

FOUNDATION Fieldbus

The digital communication signal is transmitted to the bus via a 2-wire connection. The bus also provides the power supply. For further information on the network structure and grounding and for further bus system components such as bus cables, see the relevant documentation, e.g. Operating Instructions BA00013S "FOUNDATION Fieldbus Overview" and the FOUNDATION Fieldbus Guideline.

Terminals

For wire cross-sections of 0.5 to 2.5 mm² (20 to 14 AWG)

Cable entry

Approval	Type	Clamping area
Standard, II 1/2 G Ex ia, IS	Plastic M20x1.5	5 to 10 mm (0.2 to 0.39 in)
ATEX II 1/2 D, II 1/3 D, II 1/2 GD Ex ia, II 1 GD Ex ia, II 3 G Ex nA	Metal M20x1.5 (Ex e)	7 to 10.5 mm (0.28 to 0.41 in)

For additional technical data, see section on housing → 📄 44 ff.

Device plug connectors

Devices with Harting plug Han7D

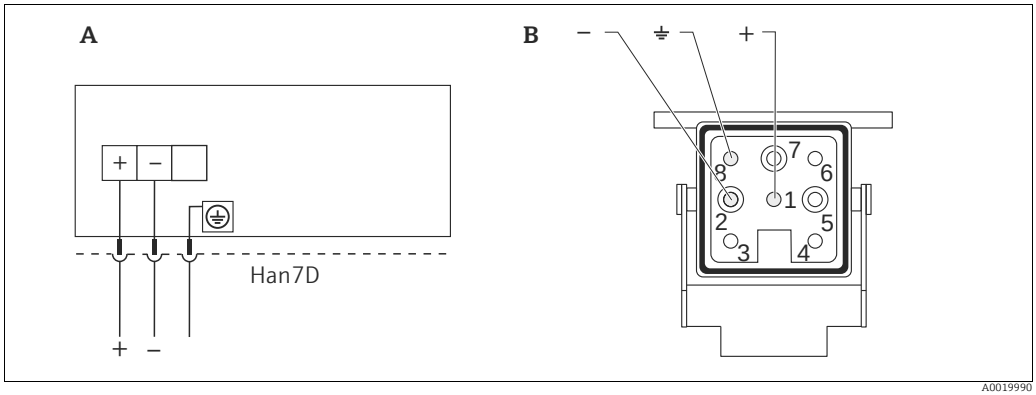

A0019990

A Electrical connection for devices with Harting plug Han7D
B View of the plug-in connection at the device

Material: CuZn

Connecting the cable version

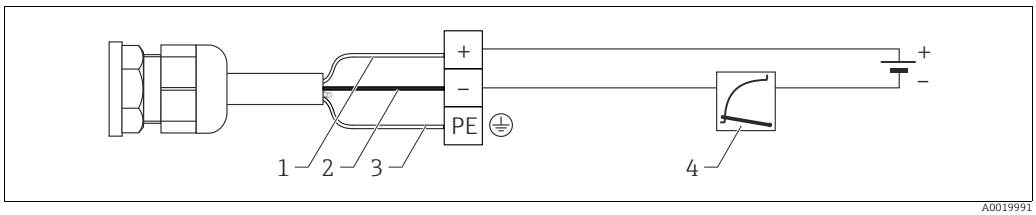

A0019991

1 rd = red
2 bk = black
3 gnye = green
4 4 to 20 mA

Devices with M12 plug

PIN assignment for M12 connector	PIN	Meaning
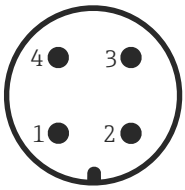	1	Signal +
	2	Not assigned
	3	Signal –
	4	Ground

Endress+Hauser offers the following accessories for devices with an M12 plug:
Plug-in jack M 12x1, straight
- Material: body PA; slotted nut CuZn, nickel-plated
- Degree of protection (fully locked): IP67
- Order number: 52006263

Plug-in jack M 12x1, elbowed
- Material: body PBT/PA; slotted nut GD-Zn, nickel-plated
- Degree of protection (fully locked): IP67
- Order number: 71114212

Cable 4x0.34 mm² (20 AWG) with M12 socket, elbowed, screw plug, length 5 m (16 ft)
- Material: body PUR; slotted nut CuSn/Ni; cable PVC
- Degree of protection (fully locked): IP67
- Order number: 52010285

Devices with 7/8" plug

PIN assignment for 7/8" connector	PIN	Meaning
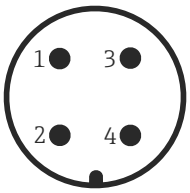	1	Signal –
	2	Signal +
	3	Not assigned
	4	Shield

External thread: 7/8 - 16 UNC
- Material: 316L (1.4401)
- Protection: IP68

Cable specification

HART

- Endress+Hauser recommends using shielded, twisted-pair two-wire cables.
- Cable outer diameter: 5 to 9 mm (0.2 to 0.35 in) depending on the cable entry used (→ 24)

PROFIBUS PA

Use a twisted, shielded two-wire cable, preferably cable type A

For further information on the cable specifications, see Operating Instructions BA00034S "PROFIBUS DP/PA: Guidelines for planning and commissioning", the PNO Guideline 2.092 PROFIBUS PA User and Installation Guideline" and IEC 61158-2 (MBP).

FOUNDATION Fieldbus

Use a twisted, shielded two-wire cable, preferably cable type A

For further information on the cable specifications, see Operating Instructions BA00013S "FOUNDATION Fieldbus Overview", FOUNDATION Fieldbus Guideline and IEC 61158-2 (MBP).

Residual ripple

Without influence on 4 to 20 mA signal up to ± 5 % residual ripple within the permitted voltage range [according to HART hardware specification HCF_SPEC-54 (DIN IEC 60381-1)]

Overvoltage protection (optional)

- Overvoltage protection:
  - Nominal functioning DC voltage: 600 V
  - Nominal discharge current: 10 kA
- Surge current check î = 20 kA as per DIN EN 60079-14: 8/20 µs satisfied
- Arrester AC current check I = 10 A satisfied

Ordering information:
Product configurator "Additional option 1" or Additional option 1" ordering feature, option "M".

NOTICE

Device could be destroyed!

- Devices with integrated overvoltage protection must be grounded.

Influence of power supply

≤ 0.0006 % of URL/1 V

Performance characteristics of the ceramic process isolating diaphragm

Reference operating conditions

- As per IEC 60770
- Ambient temperature T_U = constant, in the range of: +21 to +33 °C (+70 to 91 °F)
- Humidity φ = constant, in the range of: 5 to 80 % rH
- Ambient pressure p_A = constant, in the range of: 860 to 1060 mbar (12.47 to 15.37 psi)
- Position of the measuring cell = constant, in range: horizontally ±1°
- Input of LOW SENSOR TRIM and HIGH SENSOR TRIM for lower range value and upper range value
- Zero based span
- Material of process isolating diaphragm: Al_2O_3 (aluminum oxide ceramic)
- Supply voltage: 24 V DC ± 3 V DC
- Load with HART: 250 Ω

Uncertainty of measurement for small absolute pressure ranges

The smallest extended uncertainty of measurement that can be returned by our standards is:
- 0.4% of the measured value in the range 1 to 30 mbar (0.0145 to 0.435 psi)
- 1% of the measured value in the range < 1 mbar (0.0145 psi)

Influence of the installation position

≤ 0.18 mbar (0.003 psi) (device rotated 180°, process connection pointing upwards)

Position-dependent zero shift can be corrected. → 📄 34, "General installation instructions" section and → 📄 98 ff, "Installation instructions, diaphragm seal systems" section.
Different tightening torques (e.g. for Clamp or Varivent connections) can merely cause a shift in the zero point. This effect is corrected by position adjustment during commissioning.

Resolution

- Current output: 1 μA
- Display: can be set (factory setting: presentation of the maximum accuracy of the transmitter)

Reference accuracy

The reference accuracy comprises the non-linearity according to limit point setting, hysteresis and non-reproducibility as per IEC 60770. The data refer to the calibrated span.

Measuring cell standard	Sensor	Reference accuracy in %
100 mbar (1.5 psi)	Gauge pressure	▪ TD 1:1 bis TD 10:1 = ±0.075 ▪ TD > 10:1 = ±0.0075 x TD
100 mbar (1.5 psi)	Absolute pressure	▪ TD 1:1 bis TD 5:1 = ±0.075 ▪ TD > 5:1 = ±0.015 x TD
250 mbar (3.75 psi)	Gauge pressure/ absolute pressure	▪ TD 1:1 bis TD 10:1 = ±0.075 ▪ TD > 10:1 = ±0.0075 x TD
400 mbar (6 psi), 1 bar (15 psi), 2 bar (30 psi), 4 bar (60 psi), 10 bar (150 psi), 40 bar (600 psi)	Gauge pressure/ absolute pressure	▪ TD 1:1 bis TD 10:1 = ±0.05 ▪ TD > 10:1 = ±0.005 x TD

Measuring cell platinum	Sensor	Reference accuracy in %
100 mbar (1.5 psi), 250 mbar (3.75 psi)	Gauge pressure/ absolute pressure	▪ TD 1:1 = ±0.05
400 mbar (6 psi), 1 bar (15 psi)	Gauge pressure/ absolute pressure	▪ TD 1:1 = ±0.035
2 bar (30 psi), 4 bar (60 psi)	Gauge pressure	▪ TD 1:1 = ±0.025
2 bar (30 psi), 4 bar (60 psi)	Absolute pressure	▪ TD 1:1 = ±0.035
10 bar (150 psi), 40 bar (600 psi)	Gauge pressure/ absolute pressure	▪ TD 1:1 = ±0.035

Thermal change of the zero output and the output span

PMC71

Measuring cell	−10 to +60°C (+14 to +140 °F)	−20 to −10 °C, +60 to +125 °C (−4 to +14°F, +140 to +257°F)
	% of the set span	
100 mbar (1.5 psi), 250 mbar (3.75 psi), 400 mbar (6 psi)	±(0.088 x TD + 0.088)	±(0.138 x TD + 0.138)
1 bar (15 psi), 2 bar (30 psi), 4 bar (60 psi), 10 bar (150 psi), 40 bar (600 psi)	±(0.088 x TD + 0.04)	±(0.175 x TD + 0.075)

PMC71 high-temperature version

	−10 to +60°C (+14 to +140 °F)	to +150°C (to +302°F)
	% of the set span	
Gauge pressure measuring cell		
100 mbar (1.5 psi), 250 mbar (3.75 psi), 400 mbar (6 psi)	±(0.088 x TD + 0.088)	±(0.75 x TD)
1 bar (15 psi), 2 bar (30 psi), 4 bar (60 psi), 10 bar (150 psi), 40 bar (600 psi)	±(0.088 x TD + 0.040)	±(0.50 x TD)
Absolute pressure measuring cell		
100 mbar (1.5 psi)	±(0.088 x TD + 0.088)	±(1.25 x TD)
250 mbar (3.75 psi), 400 mbar (6 psi)	±(0.088 x TD + 0.088)	±(0.75 x TD)
1 bar (15 psi), 2 bar (30 psi), 4 bar (60 psi), 10 bar (150 psi)	±(0.088 x TD + 0.040)	±(0.75 x TD)
40 bar (600 psi)	±(0.088 x TD + 0.040)	±(0.50 x TD)

Total performance

The "Total performance" specification comprises the non-linearity including hysteresis, non-reproducibility as well as the thermal change in the zero point.
For devices with NBR or HNBR seals, the values must be multiplied by a factor of 3.
All specifications apply to the temperature range −10 to +60 °C (+14 to +140 °F) and a turn down of 1:1.

Measuring cell	PMC71	PMC71 high-temperature version
	% of URL	
100 mbar (1.5 psi), 250 mbar (3.75 psi), 400 mbar (6 psi)	±0.2	±0.46
1 bar (15 psi), 2 bar (30 psi), 4 bar (60 psi), 10 bar (150 psi), 40 bar (600 psi)	±0.15	±0.46

Long-term stability

- For measuring ranges 1 bar (15 psi): 0.05 % of URL/year
- 100 mbar to 40 bar (1.5 psi to 600 psi): ±0.2 % of URL/10 years
- 100 mbar to 40 bar (1.5 psi to 600 psi) (absolute pressure sensor): ±0.3 % of URL/10 years

Total error

The total error comprises the long-term stability and the total performance.
For devices with NBR or HNBR seals, the values must be multiplied by a factor of 3.
All specifications apply to the temperature range −10 to +60 °C (+14 to +140 °F) and a turn down of 1:1.

Measuring cell	PMC71	PMC71 high-temperature version
	% of URL/year	
100 mbar (1.5 psi), 250 mbar (3.75 psi), 400 mbar (6 psi)	±0.25	±0.51
1 bar (15 psi), 2 bar (30 psi), 4 bar (60 psi), 10 bar (150 psi), 40 bar (600 psi)	±0.2	±0.51

Warm-up period

- 4 to 20 mA HART: < 10 s
- PROFIBUS PA: 6 s
- FOUNDATION Fieldbus: 50 s

Performance characteristics of the metallic process isolating diaphragm

Reference operating conditions

- As per IEC 60770
- Ambient temperature T_U = constant, in the range of: +21 to +33 °C (+70 to 91 °F)
- Humidity φ = constant, in the range of: 5 to 80 % rH
- Ambient pressure p_A = constant, in the range of: 860 to 1060 mbar (12.47 to 15.37 psi)
- Position of the measuring cell = constant, in range: horizontally ±1°
- Input of LOW SENSOR TRIM and HIGH SENSOR TRIM for lower range value and upper range value
- Zero based span
- Material of process isolating diaphragm: AISI 316L/1.4435
- Filling oil: silicone oil
- Supply voltage: 24 V DC ± 3 V DC
- Load with HART: 250 Ω

Uncertainty of measurement for small absolute pressure ranges

The smallest extended uncertainty of measurement that can be returned by our standards is:
- 0.4% of the measured value in the range 1 to 30 mbar (0.0145 to 0.435 psi)
- 1% of the measured value in the range < 1 mbar (0.0145 psi)

Influence of the installation position

- PMP71 [1), 2)]
  - Process connections thread G 1 A, G 1 ½, G 2, 1 ½ MNPT, 2 MNPT, M 44x1.25, EN/DIN, ASME and JIS flanges: ≤ 10 mbar (0.15 psi)
  - Process connections thread: G ½, ½ MNPT, JIS G ½, JIS R ½, M20x1.5: ≤ 4 mbar (0.06 psi)

1) Device rotated 180°, process connection pointing upwards.
2) The value is doubled for devices with inert oil.

Position-dependent zero shift can be corrected. → 34, "General installation instructions" section and → 98 ff, "Installation instructions, diaphragm seal systems" section.
Different tightening torques (e.g. for Clamp or Varivent connections) can merely cause a shift in the zero point. This effect is corrected by position adjustment during commissioning.

Resolution

- Current output: 1 μA
- Display: can be set (factory setting: presentation of the maximum accuracy of the transmitter)

Reference accuracy – PMP71

The reference accuracy comprises the non-linearity according to limit point setting, hysteresis and non-reproducibility as per IEC 60770. The data refer to the calibrated span.

Measuring cell standard	Sensor	PMP71
400 mbar (6 psi)	Gauge pressure/ absolute pressure	▪ TD 1:1 = ±0.05 ▪ TD > 1:1 = ±0.05 x TD
1 bar (15 psi)	Gauge pressure/ absolute pressure	▪ TD 1:1 to TD 2.5:1 = ±0.05 ▪ TD > 2.5:1 = ±0.02 x TD
2 bar (30 psi)	Gauge pressure	▪ TD 1:1 to TD 5:1 = ±0.05 ▪ TD > 5:1 = ±0.01 x TD
2 bar (30 psi)	Absolute pressure	▪ TD 1:1 to TD 5:1 = ±0.05 ▪ TD > 5:1 = ±0.01 x TD
4 bar (60 psi), 10 bar (150 psi)	Gauge pressure/ absolute pressure	▪ TD 1:1 to TD 10:1 = ±0.05 ▪ TD > 10:1 = ±0.005 x TD
40 bar (600 psi)	Gauge pressure/ absolute pressure	▪ TD 1:1 to TD 15:1 = ±0.075 ▪ TD > 15:1 = ±0.005 x TD
100 bar (1500 psi)	Gauge pressure/ absolute pressure	▪ TD 1:1 to TD 10:1 = ±0.075 ▪ TD > 10:1 = ±0.0075 x TD
400 bar (6000 psi)	Gauge pressure/ absolute pressure	▪ TD 1:1 to TD 5:1 = ±0.15 ▪ TD > 5:1 = ±0.03 x TD
700 bar (10500 psi)	Absolute pressure	▪ TD 1:1 to TD 5:1 = ±0.15 ▪ TD > 5:1 = ±0.03 x TD

Measuring cell platinum [1]	Sensor	PMP71
400 mbar (6 psi), 1 bar (15 psi)	Gauge pressure/ absolute pressure	▪ TD 1:1 = ±0.035
2 bar (30 psi), 4 bar (60 psi), 10 bar (150 psi)	Gauge pressure	▪ TD 1:1 = ±0.025
2 bar (30 psi), 4 bar (60 psi), 10 bar (150 psi)	Absolute pressure	▪ TD 1:1 = ±0.035
40 bar (600 psi)	Gauge pressure/ absolute pressure	▪ TD 1:1 = ±0.05
100 bar (1500 psi)	Absolute pressure	▪ TD 1:1 = ±0.05
400 bar (6000 psi), 700 bar (10500 psi)	Gauge pressure/ absolute pressure	▪ TD 1:1 = ±0.075

1) Platinum version not for flush-mounted process connections G ½ and M20.

Reference accuracy – PMP75

The reference accuracy comprises the non-linearity according to limit point setting, hysteresis and non-reproducibility as per IEC 60770. The data refer to the calibrated span.

Measuring cell standard	Sensor	PMP71 and PMP75 without capillary in %	PMP75 with capillary in %
400 mbar (6 psi)	Gauge pressure/ absolute pressure	▪ TD 1:1 = ±0.15 ▪ TD > 1:1 = ±0.15 x TD	▪ TD 1:1 = ±0.15 ▪ TD > 1:1 = ±0.15 x TD
1 bar (15 psi)	Gauge pressure/ absolute pressure	▪ TD 1:1 to TD 2.5:1 = ±0.075 ▪ TD > 2.5:1 = ±0.03 x TD	▪ TD 1:1 to TD 2.5:1 = ±0.1 ▪ TD > 2.5:1 = ±0.04 x TD
2 bar (30 psi)	Relativdruck	▪ TD 1:1 to TD 5:1 = ±0.075 ▪ TD > 5:1 = ±0.015 x TD	▪ TD 1:1 to TD 2.5:1 = ±0.1 ▪ TD > 2.5:1 = ±0.04 x TD
2 bar (30 psi)	Absolutdruck	▪ TD 1:1 to TD 5:1 = ±0.075 ▪ TD > 5:1 = ±0.015 x TD	▪ TD 1:1 to TD 5:1 = ±0.075 ▪ TD > 5:1 = ±0.015 x TD
4 bar (60 psi)	Gauge pressure/ absolute pressure	▪ TD 1:1 to TD 10:1 = ±0.075 ▪ TD > 10:1 = ±0.0075 x TD	▪ TD 1:1 to TD 10:1 = ±0.075 ▪ TD > 10:1 = ±0.0075 x TD
10 bar (150 psi), 40 bar (600 psi)	Gauge pressure/ absolute pressure	▪ TD 1:1 to TD 15:1 = ±0.075 ▪ TD > 15:1 = ±0.005 x TD	▪ TD 1:1 to TD 15:1 = ±0.075 ▪ TD > 15:1 = ±0.005 x TD
100 bar (1500 psi)	Gauge pressure/ absolute pressure	▪ TD 1:1 to TD 10:1 = ±0.075 ▪ TD > 10:1 = ±0.0075 x TD	▪ TD 1:1 to TD 10:1 = ±0.075 ▪ TD > 10:1 = ±0.0075 x TD
400 bar (6000 psi)	Gauge pressure/ absolute pressure	▪ TD 1:1 to TD 5:1 = ±0.15 ▪ TD > 5:1 = ±0.03 x TD	▪ TD 1:1 to TD 5:1 = ±0.15 ▪ TD > 5:1 = ±0.03 x TD
700 bar (10500 psi)	Absolutdruck	▪ TD 1:1 to TD 5:1 = ±0.15 ▪ TD > 5:1 = ±0.03 x TD	—

Measuring cell platinum [1]	Sensor	PMP71 and PMP75 without capillary in %	PMP75 with capillary in %
1 bar (15 psi), 2 bar (30 psi), 4 bar (60 psi), 10 bar (150 psi), 40 bar (600 psi), 400 bar (6000 psi), 700 bar (10500 psi)	Gauge pressure/ absolute pressure	▪ TD 1:1 = ±0.05	—

1) Platinum version not for flush-mounted process connections G ½ and M20.

Thermal change of the zero output and the output span – PMP71 and PMP75

When using a PMP75, the influence from the respective diaphragm seal must be taken into account. (→ 95 ff "Planning instructions, diaphragm seal systems".)

PMP71 and PMP75 (basic device), internal process isolating diaphragm

Measuring cell	Material of the process isolating diaphragm		−10 to +60°C (+14 to +140 °F)	−40 to −10 °C, +60 to +85 °C (−40 to +14 °F, +140 to +185 °F)
	316 L	Gold-rhodium	% of the set span	
400 mbar (6 psi)	✔	✔	±(0.2 x TD + 0.015)	±(0.4 x TD + 0.03)
1 bar (15 psi), 2 bar (30 psi), 4 bar (60 psi), 10 bar (150 psi)	✔	✔	±(0.1 x TD + 0.01)	±(0.4 x TD + 0.02)
40 bar (600 psi)	✔	–	±(0.1 x TD + 0.01)	±(0.4 x TD + 0.02)
100 bar (1500 psi)	✔	–	±(0.2 x TD + 0.015)	±(0.4 x TD + 0.03)
400 bar (6000 psi)	✔	–	±(0.35 x TD + 0.02)	±(0.7 x TD + 0.04)
700 bar (10500 psi)	✔	–	±(0.4 x TD + 0.03)	±(0.7 x TD + 0.04)

PMP71, flush-mounted process isolating diaphragm made of 316L with gold-rhodium coating

Measuring cell	−10 to +60°C (+14 to +140 °F)	−40 to −10 °C, +60 to +85 °C (−40 to +14 °F, +140 to +185 °F)
	% of the set span	
400 mbar (6 psi)	±(0.2 x TD + 0.015) x 5	±(0.4 x TD + 0.03) x 5
1 bar (15 psi), 2 bar (30 psi), 4 bar (60 psi), 10 bar (150 psi), 40 bar (600 psi)	±(0.1 x TD + 0.01) x 5	±(0.4 x TD + 0.02) x 5
100 bar (1500 psi)	±(0.2 x TD + 0.015) x 5	±(0.4 x TD + 0.03) x 5
400 bar (6000 psi)	±(0.35 x TD + 0.02) x 5	±(0.7 x TD + 0.04) x 5
700 bar (10500 psi)	±(0.4 x TD + 0.03) x 5	±(0.7 x TD + 0.04) x 5

Total performance – PMP71

The "Total performance" specification comprises the non-linearity including hysteresis, non-reproducibility as well as the thermal change in the zero point.
All specifications apply to the temperature range −10 to +60 °C (+14 to +140 °F) and a turn down of 1:1.

Measuring cell	PMP71	PMP71 with gold-rhodium-coated process isolating diaphragm
	% of URL	
400 mbar (6 psi)	±0.25	±1.25
1 bar (15 psi)	±0.15	±0.75
2 bar (30 psi)	±0.15	±0.45
4 bar (60 psi)	±0.15	±0.3
10 bar (150 psi), 40 bar (600 psi)	±0.15	±0.15
100 bar (1500 psi)	±0.25	±0.25
400 bar (6000 psi)	±0.3	±0.3
700 bar (10500 psi)	±0.3	±0.3

Long-term stability

PMP75:
For measuring ranges 1 bar (15 psi): 0.05 % of URL/year

PMP71 gauge pressure sensors:

	1 year	5 years	10 year
Measuring ranges [bar (psi)]	% of URL		
1 (15)	±0.020	±0.080	±0.180
10 (150)	±0.025	±0.050	±0.075
40 (600)	±0.025	±0.075	±0.100
100 (1500)	±0.050	±0.150	±0.200
400 (6000)	±0.050	--	±1

Total error - PMP71

The total error comprises the total performance and long-term stability.
All specifications apply to the temperature range −10 to +60 °C (+14 to +140 °F) and a turn down of 1:1.

Measuring cell	% of URL/year
400 mbar (6 psi)	▪ ±0.3
1 bar (15 psi), 2 bar (30 psi), 4 bar (60 psi), 10 bar (150 psi), 40 bar (600 psi)	▪ ±0.2
100 bar (1500 psi)	▪ ±0.3
400 bar (6000 psi)	▪ ±0.35
700 bar (10500 psi)	▪ ±0.35

Warm-up period – PMP71, PMP75

- 4 to 20 mA HART: < 10 s
- PROFIBUS PA: 6 s
- FOUNDATION Fieldbus: 50 s

Installation

General installation instructions

- For PMP75: See → 📄 98, "Installation instructions" section.
- The position-dependent zero point shift can be corrected directly at the device via operating keys, and also in hazardous areas in the case of devices with external operation. Diaphragm seals also shift the zero point, depending on the installation position (see also → 📄 98, "Installation instructions" section).
- The housing of the Cerabar S can be rotated 380°. See → 📄 37, "Turning the housing" section.
- Endress+Hauser offers a mounting bracket for installing the device on pipes or walls (see also → 📄 34, "Wall and pipe-mounting" section).
- Use flushing rings for flange and cell diaphragm seals if buildup or clogging can be expected at the diaphragm seal connection. The flushing ring can be fitted between the process connection and diaphragm seal. Material buildup in front of the process isolating diaphragm can be flushed away, and the pressure chamber vented, via the two lateral flushing holes.

Measuring arrangement for devices without diaphragm seals – PMC71, PMP71

Cerabar S transmitters without diaphragm seals are mounted as per the norms for a manometer (DIN EN 837-2). We recommend the use of shutoff devices and siphons. The orientation depends on the measuring application.

Pressure measurement in gases

- Mount Cerabar S with shutoff device above the tapping point so that any condensate can flow into the process.

Pressure measurement in steams

- Use siphons for pressure measurement in steam. The siphon reduces the temperature to almost ambient temperature. Preferably mount the Cerabar S with the siphon below the tapping point. Advantages:
  - defined water column only causes minimal/negligible measured errors
  - only minimal/negligible thermal effects on the device

  Mounting above the tapping point is also possible. Pay attention to the maximum permitted ambient temperature of the transmitter!
- Fill the siphon with liquid before commissioning.

Pressure measurement in liquids

- Mount Cerabar S with shutoff device below or at the same level as the tapping point.

Level measurement

- Mount Cerabar S below the lowest measuring point.
- Do not mount the device at the following positions:
  In the filling curtain, in the tank outlet or at a point in the container which could be affected by pressure pulses from an agitator or a pump.
- The adjustment and functional test can be carried out more easily if you mount the device downstream of a shutoff device.

Measuring arrangement for devices with diaphragm seals – PMP75

- See → 📄 95, "Planning instructions, diaphragm seal systems" section.

Wall and pipe-mounting

Endress+Hauser offers a mounting bracket for installing the device on pipes or walls.
The mounting bracket can be installed on pipes with a diameter of 1¼" to 2" or on walls.

Ordering information:
Product Configurator, "Additional options" ordering feature, option "U" or
Product Configurator, "Accessory Enclosed" ordering feature, option "PA" or
as a separate accessory (part no.: 71102216).

Dimensions → 📄 84.

Heat insulation – PMC71 high-temperature version

The PMC71 high-temperature version must only be insulated up to a certain height. The maximum permitted insulation height is indicated on the devices and applies to an insulation material with a heat conductivity ≤ 0.04 W/(m x K) and to the maximum permitted ambient and process temperature (→ see table below). The data were determined under the most critical application "quiescent air".

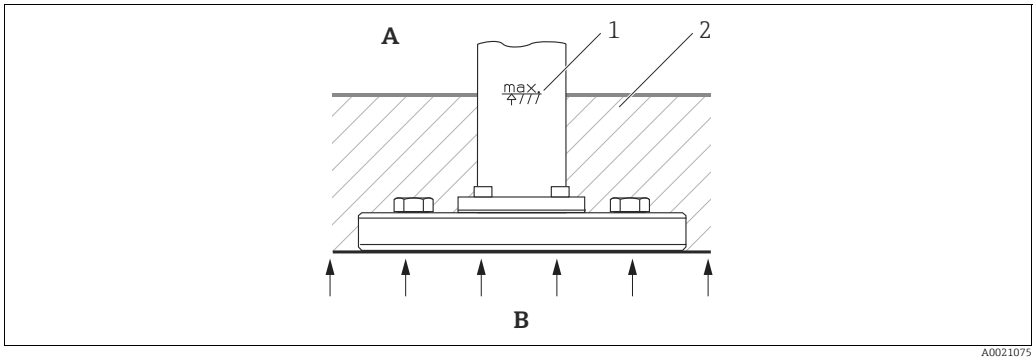

A0021075

Maximum insulation height, here indicated on a PMC71 with a flange

A Ambient temperature
B Process temperature
1 Maximum permitted insulation height
2 Insulation material

	PMC71 high-temperature version
Ambient temperature	≤ 70 °C (158 °F)
Process temperature	≤ 150 °C (302 °F)

"Separate housing" version

With the "separate housing" version, you are able to mount the housing with the electronics insert at a distance from the measuring point. This version facilitates trouble-free measurement:
- Under particularly difficult measuring conditions (at installation locations that are cramped or difficult to access)
- If rapid cleaning of the measuring point is required
- If the measuring point is exposed to vibrations
- For compact installations

You can choose between different cable versions:
- PE: 2 m (6.6 ft), 5 m (16 ft) and 10 m (33 ft)
- FEP: 5 m (16 ft).

Ordering information:
Product Configurator, "Additional options" ordering feature, "G" option.

Dimensions → 84.

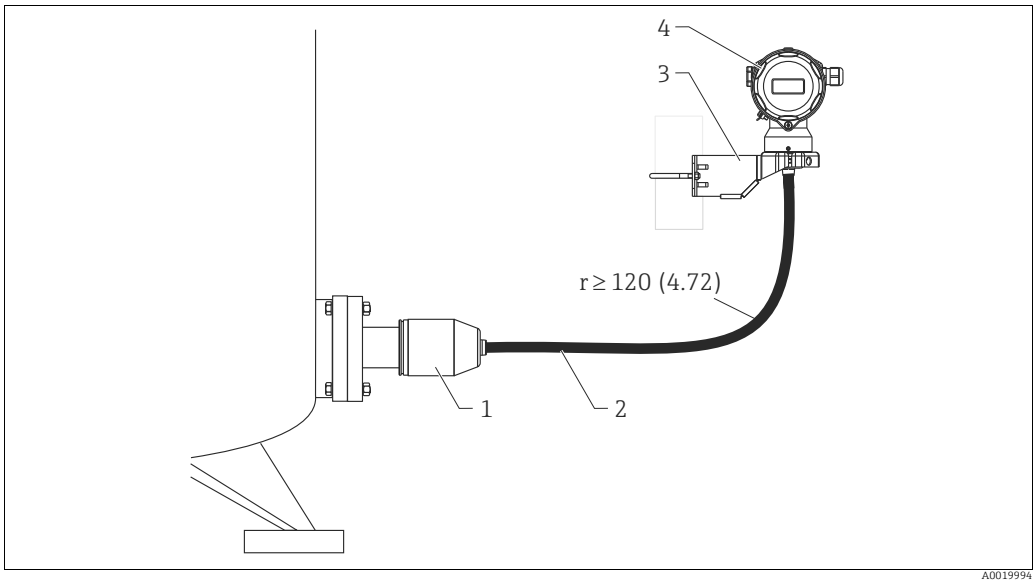

Dimensions in mm (inch)

In the case of the "separate housing" version, the sensor is delivered with the process connection and cable ready mounted. The housing and a mounting bracket are enclosed as separate units. The cable is provided with a socket at both ends. These sockets are simply connected to the housing and the sensor.

1 Process connection with sensor - For degrees of protection, see the following section
2 Cable, both ends are fitted with a socket
3 Mounting bracket provided, suitable for pipe and wall mounting
4 Housing with electronic insert - Degrees of protection → 44 ff

Degree of protection for the process connection and sensor with the use of
- FEP cable:
  - IP 69K
  - IP 66 NEMA 4/6P
  - IP 68 (1.83 mH_2O for 24 h) NEMA 4/6P
- PE cable:
  - IP 66 NEMA 4/6P
  - IP 68 (1.83 mH_2O for 24 h) NEMA 4/6P

Technical data of the PE and FEP cable:
- Minimum bending radius: 120 mm (4.72 in)
- Cable extraction force: max. 450 N
- Resistance to UV light

Use in hazardous area:
- Intrinsically safe installations (Ex ia/IS)
- FM/CSA IS: for Div. 1 installation only

Reduction of the installation height

If the separate housing is used, the installation height of the process connection is reduced compared to the dimensions of the standard version.

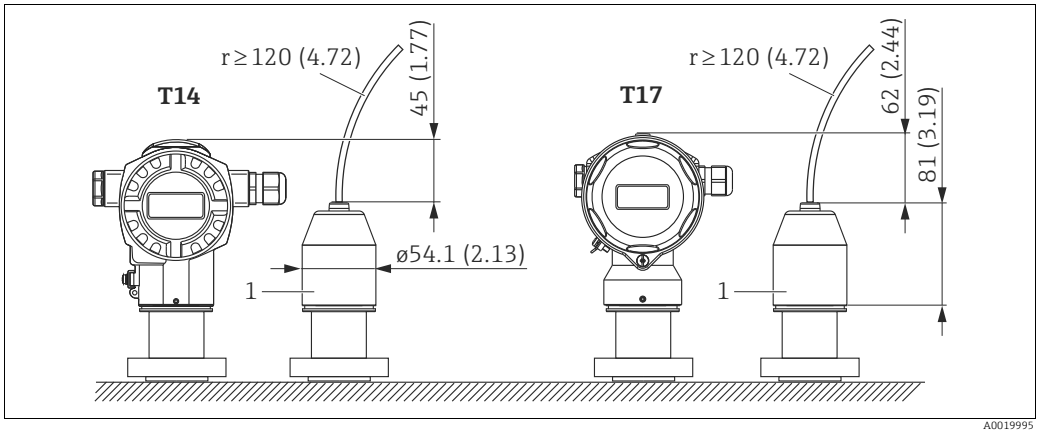

Dimensions in mm (inch)

1 Process connection adapter.

Turning the housing

The housing can be rotated up to 380° by loosening the Allen screw.

Your benefits

- Simple mounting by optimally aligning the housing
- Good, accessible device operation
- Optimum readability of the onsite display (optional).

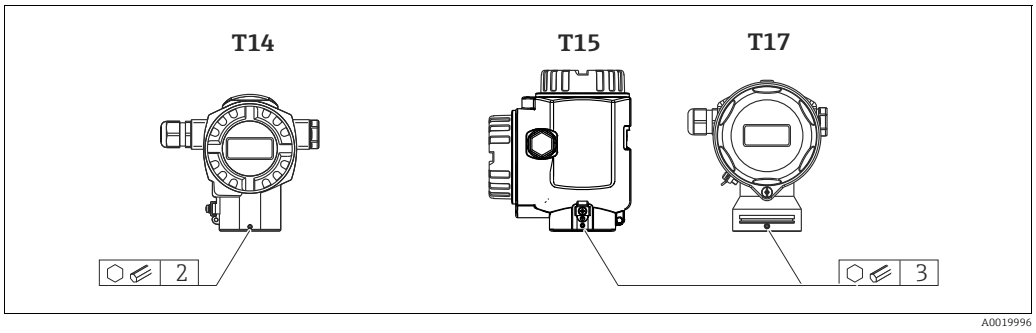

Oxygen applications

Oxygen and other gases can react explosively to oils, grease and plastics, such that, among other things, the following precautions must be taken:
- All components of the system, such as measuring devices, must be cleaned in accordance with the BAM (DIN 19247) requirements.
- Dependent on the materials used, a certain maximum temperature and a maximum pressure for oxygen applications must not be exceeded.

The devices suitable for gaseous oxygen applications are listed in the following table with the specification p_{max}.

Order code for devices [1] cleaned for oxygen applications	p_{max} for oxygen applications	T_{max} for oxygen applications
PMC71 – * * * ** * ** 2 * *, Devices with sensors, nominal value < 10 bar (150 psi)	Over pressure limit (OPL) of sensor[2), 3)]	60 °C (140 °F)
PMC71 – * * * ** * ** 2 * *, Devices with sensors, nominal value ≥ 10 bar (150 psi)	30 bar (450 psi)	60 °C (140 °F)
PMP71 – * * * ** * * ** N * *	Dependent on the lowest-rated element, with regard to pressure, of the selected components: over pressure limit (OPL) of the sensor, process connection (1.5 x PN) or fill fluid (160 bar (2400 psi))	85 °C (185 °F)
PMP75 – * * * ** * * * ** N * *	Dependent on the lowest-rated element, with regard to pressure, of the selected components: over pressure limit (OPL) of the sensor, process connection (1.5 x PN) or fill fluid (160 bar (2400 psi))	85 °C (185 °F)

1) Only devices, not accessories or enclosed accessories.

2) Product Configurator, "Sensor range; Sensor over pressure limit (= OPL)" ordering feature

3) PMC71 with PVDF thread or flange: Only mount with a mounting bracket. MWP 10 bar (150 psi), OPL max. 15 bar (225 psi). Process temperature range −10 to +60 °C (+14 to +140 °F)

Silicone-free applications

Special cleaning of the transmitter to remove paint-wetting substances, for use in paint shops for example.
Ordering information:
Product Configurator, "Seal" ordering feature, option "L" or "M".

Ultrapure gas applications

Endress+Hauser also offers devices for special applications, such as ultrapure gas, cleaned from oil and grease. No special restrictions regarding the process conditions apply to these devices.

Product Configurator, "Seal" ordering feature or
Product Configurator "Fill fluid" ordering feature.

Applications with hydrogen

The following distinction is made for applications or media with hydrogen content:

a. Liquid applications with hydrogen separation from an electrolyte:
   - The gold/rhodium coating which can be ordered with the order code only offers protection against hydrogen diffusion through the process isolating diaphragm in liquids (e.g. such as electrolytes or aqueous solutions). In gas applications, the gold/rhodium coating does **not** provide effective protection against hydrogen diffusion through the process isolating diaphragm.

b. Gasapplikationen mit Wasserstoffanteilen:
   - If the application is a gas application with hydrogen content, the membrane requires a **pure** gold coating. Endress+Hauser offers this product version with a gold coating ≥25 µm as a **T**echnical **S**pecial **P**roduct.

Ordering information:
Product Configurator, "Material of the process isolating diaphragm" ordering feature, option "6".

Environment

Ambient temperature range

Version	PMC71 high-temperature version	PMC71	PMP71 [1]	PMP75 [1]
Without LCD display	−20 to +70 °C (-4 to +158 °F)	−40 to +85 °C (-40 to +185 °F)		
With LCD display [2]		−20 to +70 °C (-4 to +158 °F)		
With M12 plug elbowed		-25 to +85 °C (-13 to +185 °F)		
With separate housing	—	−20 to +50 °C (-4 to +122 °F) (installation without insulation)		—
Diaphragm seal systems	—	—	—	→ 95
MID parts certificate	—	—	−25 to +55 °C (-13 to +131 °F)	—

1) Lower temperatures on request

2) Extended temperature application range (-40 °C to +85 °C (-40 °F to +185 °F)) with restrictions in optical properties such as display speed and contrast

For high-temperature applications, either a PMP75 with a temperature isolator or with a capillary can be used. If vibrations also occur in the application, Endress+Hauser recommends using a PMP75 with a capillary. If a PMP75 with a temperature isolator or capillary is used, we recommend a suitable retaining unit for mounting (see "Wall and pipe-mounting" section on → 34).

For devices for use in hazardous areas, see Safety Instructions, Installation or Control Drawing. (→ 107 ff, "Safety Instructions" and "Installation/Control Drawings" sections)

Hazardous areas

- Pressure measuring devices that have the common explosion protection certificates (e.g. ATEX/FM/CSA/ IEC Ex etc.) can be used in hazardous areas with ambient temperatures down to -50 °C (-58 °F). The explosion protection functionality can be guaranteed down to -50 °C (-58 °F) ambient temperature.
- The nameplate specification is limited to an ambient temperature of -40 °C (-40 °F) as all the metrological device tests are only performed down to temperatures of -40 °C (-40 °F). If the device is operated at an ambient temperature below -40 °C (-40 °F), the technical specifications in this document no longer apply. Functional restrictions can be expected.

Storage temperature range

- −40 to +90 °C (-40 to +194 °F)
- Onsite display: −40 to +85 °C (-40 to +185 °F)
- Separate housing: -40 to +60 °C (-40 to +140 °F)

Degree of protection

- → See ordering feature "Housing; Cable entry; Protection".
- Degree of protection IP 68 for T17 housing: 1.83 mH_2O for 24 h
- Separate housing → 84

Climate class

Class 4K4H (air temperature: −20 to +55 °C (-4 to +131 °F), relative humidity: 4 to 100 %) fulfilled as per DIN EN 60721-3-4 (condensation possible. With PMC71, avoid condensate in the device).

Vibration resistance

Device/accessory	Test standard	Vibration resistance
PMC71 [1]	GL	Guaranteed for 3 to 25 Hz: ±1.6 mm (0.063 in); 25 to 100 Hz: 4 g in all 3 planes
PMP71		
PMP75 [2], [3]		
With mounting bracket	IEC 61298-3	Guaranteed for 10 to 60 Hz: ±0.15 mm (0.0059 in); 60 to 500 Hz: 2 g in all 3 planes
PMP71 with MID parts certificate	OIML R117-1	Class M3

1) Not for high-temperature version with Ex d[ia], CSA XP or FM XP

2) With aluminum T14 housing only

3) For high-temperature applications, either a PMP75 with a temperature isolator or with a capillary can be used. If vibrations also occur in the application, Endress+Hauser recommends using a PMP75 with a capillary. If a PMP75 with a temperature isolator or capillary is used, it must be mounted with a mounting bracket (→ 34).

Electromagnetic compatibility

- Electromagnetic compatibility to EN 61326 and NAMUR recommendation EMC (NE21). For details refer to the Declaration of Conformity.
- With enhanced immunity against electromagnetic fields as per EN 61000-4-3:
  30 V/m with closed cover [1]
- Maximum deviation: < 0.5 % of span
- All EMC measurements were performed with a turn down (TD) = 2:1.
- Class E3 as per OIML R75-2

1) For devices with T14 housing

Process

Process temperature limits

PMC71 (with ceramic process isolating diaphragm)

- −25 to +125 °C (−13 to +257 °F)
- High-temperature version: −20 to +150 °C (−4 to +302 °F); Product Configurator "Additional options 1" ordering feature, option "T".
- With applications involving saturated steam, a Cerabar S with a metallic process isolating diaphragm must be used, or a siphon for temperature isolation should be provided during installation.
- Observe the process temperature range of the seal in the following table.

Seal	Process temperature range	Option [1]
FKM Viton	−25 to +125 °C/150 °C (-13 to +257 °F/302 °F) [2]	A, L
EPDM (FDA 21CFR177.2600; 3A Class II; USP Class VI) DVGW (KTW, W270, W534), WRAS, ACS, NSF61	−20 to +125 °C/150 °C (-4 to +257 °F/302 °F) [2]	B [3]
EPDM	−20 to +150 °C (-4 to +302 °F)	B
Kalrez, Compound 4079	+5 to +125 °C/150 °C (+41 to +257 °F/302 °F) [2]	D, M
Chemraz, Compound 505	−10 to +125 °C/150 °C (+14 to +257 °F/302 °F) [2]	E
HNBR (FDA 21CFR177.2600; 3A Class II; KTW; AFNOR; BAM)	−25 to +125 °C (−13 to +257 °F)	F[3]
NBR	−10 to +100 °C (+14 to +212 °F)	F
FKM Viton, FDA 21CFR177.2600	−5 to +125 °C (+23 to +257 °F)	G
FKM Viton, cleaned from oil and grease	−10 to +125 °C/150 °C (14 to +257 °F/302 °F) [2]	1
FKM Viton, cleaned for oxygen service	−10 to +60 °C (+14 to +140 °F)	2
The process temperature ranges specified here refer to permanent application of the PMC71. They may be exceeded for a short time (e.g. for cleaning).		

1) Product Configurator, "Seal" ordering feature

2) 150 °C (302 °F): for high-temperature version

3) These seals are used for devices with 3A-approved process connections.

Applications with jumps in temperature

Extreme jumps in temperature can result in temporary measuring errors. Temperature compensation takes effect after several minutes. Internal temperature compensation is faster the smaller the jump in temperature and the longer the time interval involved.
For further information please contact your local Endress+Hauser Sales Center.

PMP71 (with metallic process isolating diaphragm)

Designation	Temperature operating range
Process connections with internal process isolating diaphragm	−40 to +125 °C (-40 to +257 °F) (+150 °C (302 °F) for max. one hour)
Process connections with flush-mounted process isolating diaphragm, G 1 A, G 1 ½ A, G 2 A, 1 NPT, 1 ½ NPT, 2 NPT, M 44x1.25, EN/DIN, ASME and JIS flanges	−40 to +100 °C (-40 to +212 °F)
Process connections with flush-mounted process isolating diaphragm, G ½ A, M20x1.5	−20 to +85 °C (-4 to 185 °F)

PMP71 (with metallic process isolating diaphragm) with MID parts certificate

−25 to +55 °C (-13 to +131 °F)

PMP75 (with diaphragm seal)

- Depending on the diaphragm seal and filling oil from -70 °C (-94 °F) to +400 °C (+752 °F). Observe the temperature application limits → 95.
- The PTFE foil used is designed to protect the unit against abrasion. It does not provide protection against corrosive media.
- Do not use diaphragm seals with 0.25 mm (0.01 in) PTFE foil on AISI 316L (1.4435/1.4404) for vacuum applications, upper temperature limit +204 °C (+399 °F).
- For oxygen applications, observe → 38, "Oxygen applications" section.

Pressure specifications

⚠ WARNING

The maximum pressure for the measuring device depends on the lowest rated element with regard to pressure → 11 ff, "Measuring range" and → 43 ff "Mechanical construction" section.

- The measuring device must be operated only within the specified limits!
- The MWP (maximum working pressure) is specified on the nameplate. This value refers to a reference temperature of 20°C (68°F), or 100°F (38 °C) for ASME flanges, and may be applied to the device for an unlimited time. Observe the pressure-temperature dependency of the MWP.
- The pressure values permitted at higher temperatures can be found in the standards
  EN 1092-1: 2001 Tab. 18 [1)]
  ASME B 16.5a – 1998 Tab. 2-2.2 F316
  ASME B 16.5a – 1998 Tab. 2.3.8 N10276
  JIS B 2220.
- The test pressure corresponds to the over pressure limit of the measuring device (OPL = 1.5 x MWP[2)]) and may only be applied temporarily so that no permanent damage develops.
- The Pressure Equipment Directive (EC Directive 97/23/EC) uses the abbreviation "PS". The abbreviation "PS" corresponds to the MWP (maximum working pressure) of the measuring device.
- In the case of sensor range and process connections where the over pressure limit (OPL) of the process connection is smaller than the nominal value of the sensor, the device is set at the factory, at the very maximum, to the OPL value of the process connection. If you want to use the entire sensor range, select a process connection with a higher OPL value (1.5 x PN; MWP = PN).
- In oxygen applications, the values for "p_{max} and T_{max} for oxygen applications" as per → 38, "Oxygen applications" section may not be exceeded.

1) With regard to their stability-temperature property, the materials 1.4435 and 1.4404 are grouped together under 13EO in EN 1092-1: 2001 Tab. 18. The chemical composition of the two materials can be identical.
2) The equation does not apply for PMP71 and PMP75 with a 40 bar (600 psi) or 100 bar (1500 psi) measuring cell.

Mechanical construction

Device height

The device height is based on

- the height of the housing
- the height of optional mounted parts such as temperature isolators or capillaries
- the height of the relevant process connection.

The individual heights of the components can be found in the following sections. You can calculate the device height easily by adding the individual heights together. If necessary, the installation space (the space used to install the device) must also be taken into account.
You can use the following table for this:

Section	Page	Height	Examples
Height of housing	→ 44 ff	(A)	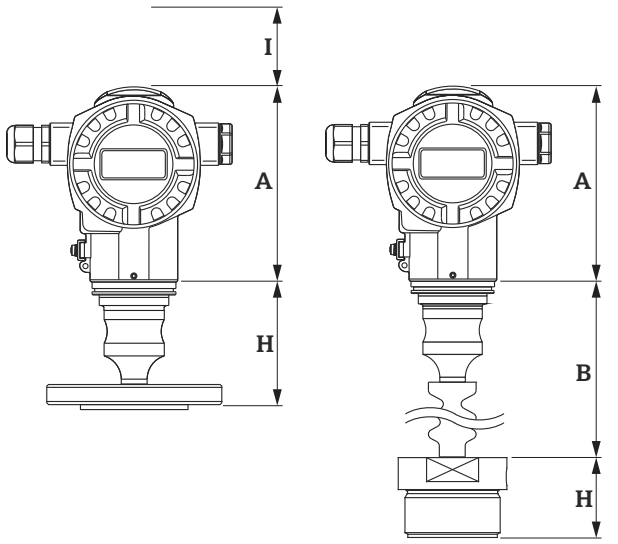
Optional mounted parts	→ 46 ff	(B)	
Process connections	→ 46 ff	(H)	
Installation space	-	(I)	
Device height			

T14 housing, optional display on the side

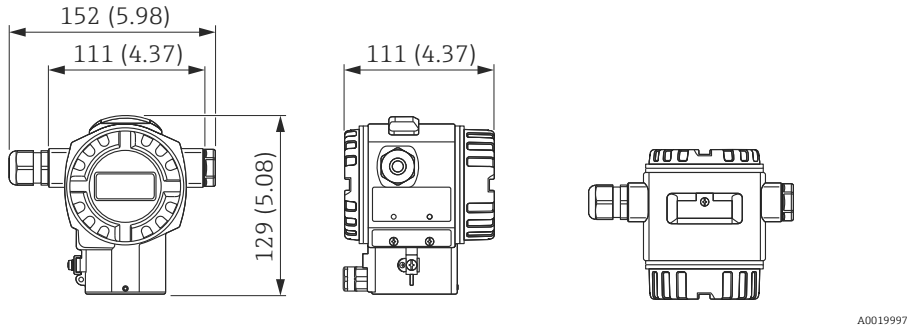

Dimensions in mm (inch)

Front view, left-hand side view, top view

Material		Degree of protection	Cable entry	Weight kg (lbs)		Option [1]
Housing	Cover seal			with display	without display	
Aluminum	EPDM	IP66/67 NEMA 6P	M20 gland	1.2 (2.65)	1.1 (2.43)	A
		IP66/67 NEMA 6P	G ½" thread			B
		IP66/67 NEMA 6P	NPT ½" thread			C
		IP66/67 NEMA 6P	M12 plug			D
		IP66/67 NEMA 6P	7/8" plug			E
		IP65 NEMA 4	HAN7D plug 90 degrees			F
316L	EPDM	IP66/67 NEMA 6P	M20 gland	2.1 (4.63)	2.0 (4.41)	1
		IP66/67 NEMA 6P	G ½" thread			2
		IP66/67 NEMA 6P	NPT ½" thread			3
		IP66/67 NEMA 6P	M12 plug			4
		IP66/67 NEMA 6P	7/8" plug			5
		IP65 NEMA 4	HAN7D plug 90 degrees			6
	FVMQ	IP66/67 NEMA 6P	M20 gland			7
	FVMQ	IP66/67 NEMA 6P	NPT ½" thread			8

1) Product Configurator, "Housing, cable entry, degree of protection" ordering feature

T17 housing (hygienic), optional display on the side

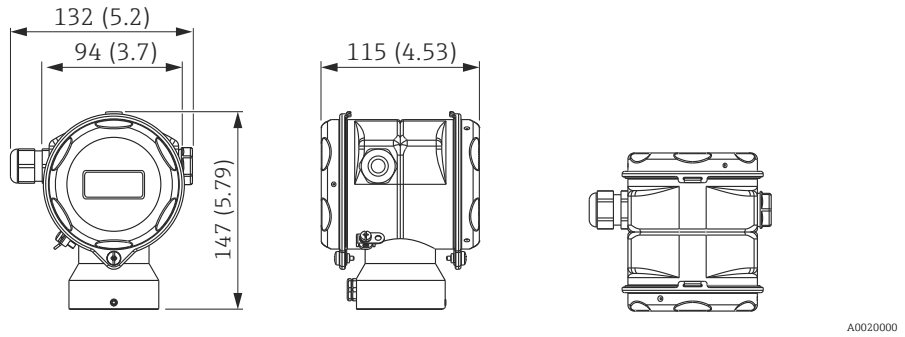

Dimensions in mm (inch)

Front view, left-hand side view, top view

Material		Degree of protection[1]	Cable entry	Weight kg (lbs)		Option [2]
Housing	Cover seal			with display	without display	
316L	EPDM	IP66/68 NEMA 6P	M20 gland	1.2 (2.65)	1.1 (2.43)	R
		IP66/68 NEMA 6P	G ½" thread			S
		IP66/68 NEMA 6P	NPT ½" thread			T
		IP66/68 NEMA 6P	M12 plug			U
		IP66/68 NEMA 6P	7/8" plug			V

1) Degree of protection IP 68: 1.83 mH_2O for 24 h

2) Product Configurator, "Housing, cable entry, degree of protection" ordering feature

Process connections for PMC71 with internal process isolating diaphragm

Threaded connection ISO 228 G

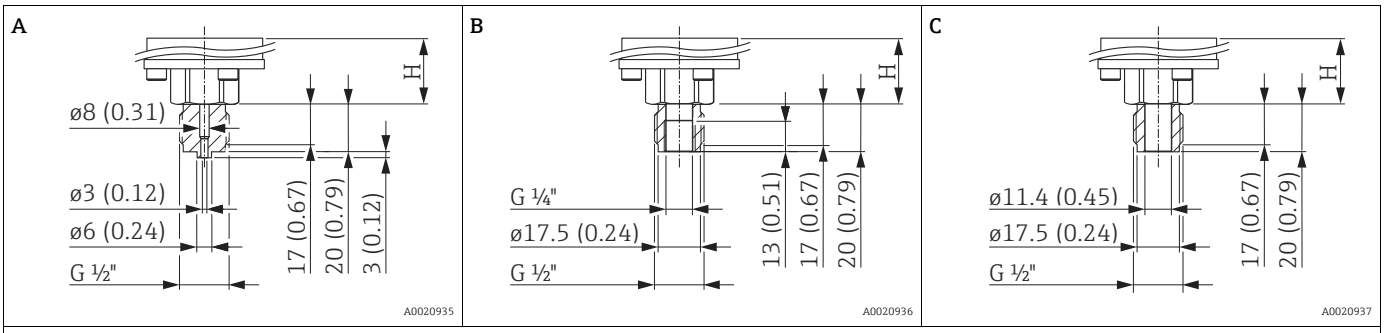

Engineering unit mm (in)

Height H → 48

Position	Designation	Material	Weight kg (lbs)	Approval [1]	Option [2]
A	Thread ISO 228 G ½" A EN 837	AISI 316L	0.63 (1.39)	CRN	GA
		Alloy C276 (2.4819)		CRN	GB
		Monel (2.4360)		-	GC
		PVDF ▪ Only mount with a mounting bracket ▪ MWP 10 bar (150 psi), OPL max. 15 bar (225 psi) ▪ Process temperature range: +10 to +60 °C (+14 to +140 °F)		-	GD
B	Thread ISO 228 G ½" A G ¼" (female) EN 837	AISI 316L		CRN	GE
		Alloy C276 (2.4819)		CRN	GF
		Monel (2.4360)		-	GG
C	Thread ISO 228 G ½" A EN 837, bore 11.4 mm (0.45 in)	AISI 316L		CRN	GH
		Alloy C276 (2.4819)		CRN	GJ
		Monel (2.4360)		-	GK

1) CSA approval: Product Configurator, "Approval" ordering feature

2) Product Configurator, "Process connection" ordering feature

Some device versions have CRN approval. For a CRN-approved device, a CRN-approved process connection must be ordered with a CSA approval. These devices are fitted with a separate plate bearing the registration number 0F10525.5C.

Process connections for PMC71 with internal process isolating diaphragm

Threaded connection ANSI

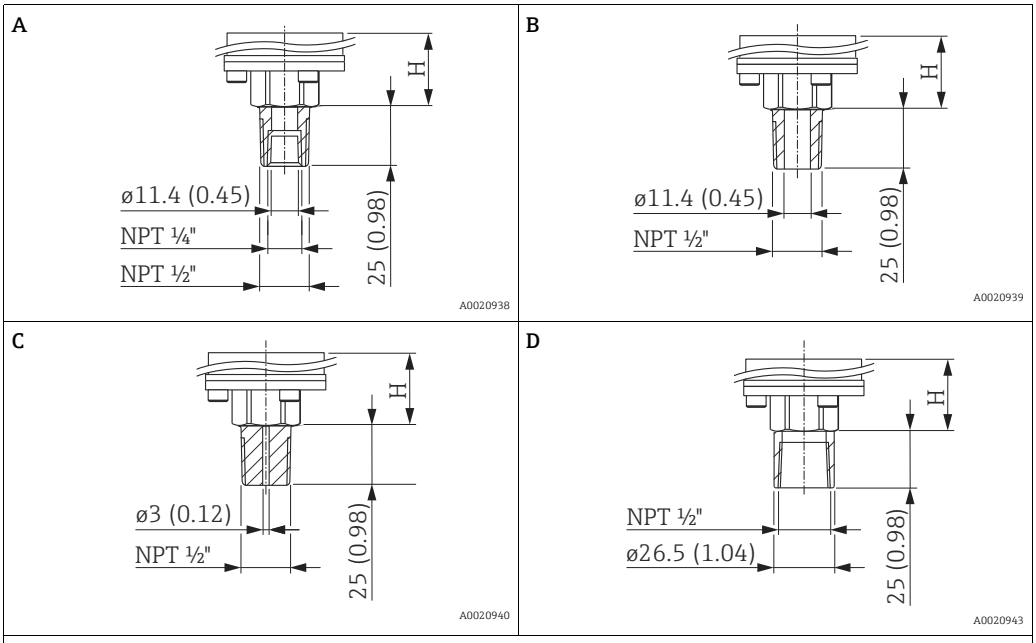

Engineering unit mm (in)

Height H → 48

Position	Designation	Material	Weight kg (lbs)	Approval [1]	Option [2]
A	ANSI ½" MNPT, ¼" FNPT	AISI 316L	0.63 (1.39)	CRN	RA
		Alloy C276 (2.4819)		CRN	RB
		Monel (2.4360)		-	RC
B	ANSI ½" MNPT, bore 11.4 mm (0.45 in)	AISI 316L		CRN	RD
		Alloy C276 (2.4819)		CRN	RE
		Monel (2.4360)		-	RF
C	ANSI ½" MNPT, bore 3 mm (0.12 in)	**PVDF** ▪ Only mount with a mounting bracket ▪ MWP 10 bar (150 psi), OPL max. 15 bar (225 psi) ▪ Process temperature range: +10 to +60 °C (+14 to +140 °F)		-	RG
D	ANSI ½" FNPT bore 11.4 mm (0.45 in)	AISI 316L		CRN	RH
		Alloy C276 (2.4819)		CRN	RJ
		Monel (2.4360)		-	RK

1) CSA approval: Product Configurator, "Approval" ordering feature

2) Product Configurator, "Process connection" ordering feature

Some device versions have CRN approval. For a CRN-approved device, a CRN-approved process connection must be ordered with a CSA approval. These devices are fitted with a separate plate bearing the registration number 0F10525.5C.

Process connections for PMC71 with internal process isolating diaphragm

Threaded connection JIS

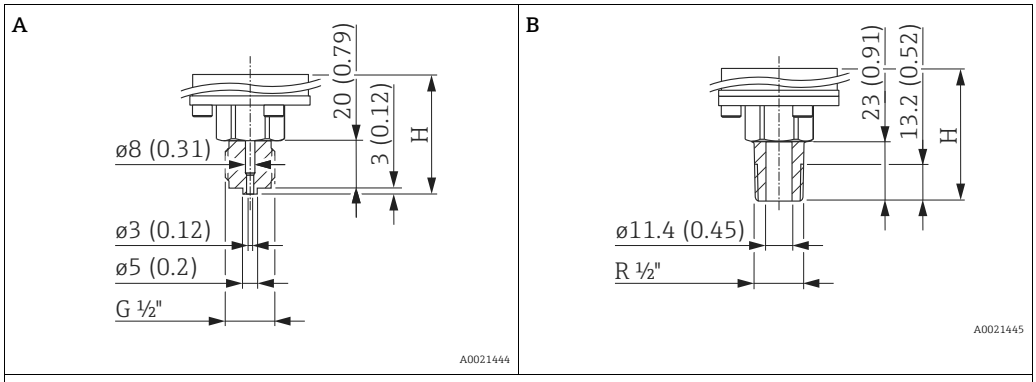

Engineering unit mm (in)

Height H → 48

Position	Designation	Material	Weight kg (lbs)	Option [1]
A	JIS B0202 G ½" (male)	AISI 316L	0.63 (1.39)	GL
B	JIS B0203 R ½" (male)			RL

1) Product Configurator, "Process connection" ordering feature

Threaded connection DIN 13

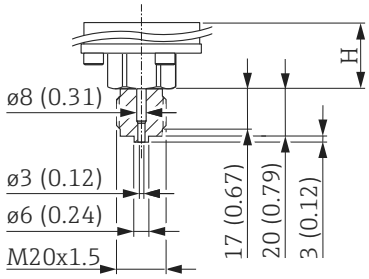

Engineering unit mm (in)

Height H → 48

Designation	Material	Weight kg (lbs)	Option [1]
DIN 13 M20 x 1.5, EN 837 3 mm (0.12 in)	AISI 316L	0.63 (1.39)	GP
	Alloy C276 (2.4819)		GQ

1) Product Configurator, "Process connection" ordering feature

Process connections for PMC71 with internal process isolating diaphragm - height H

Designation	Height H
Standard height	26 mm (1.02 in)
Device with Ex d[ia], CSA XP or FM XP	96 mm (3.78 in)
High-temperature version	106 mm (4.17 in)
High-temperature version with Ex d[ia], CSA XP or FM XP	176 mm (6.93 in)

Process connections for PMC71 with flush-mounted process isolating diaphragm

Threaded connection DIN 13

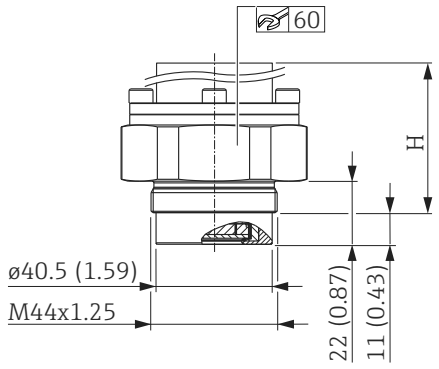

Engineering unit mm (in)

Height H → 📄 50

Designation	Material	Weight kg (lbs)	Option [1]
DIN 13 M44 x 1.25	AISI 316L	0.63 (1.39)	1R
	Alloy C276 (2.4819)		1S

1) Product Configurator, "Process connection" ordering feature

Threaded connection ISO 228 G

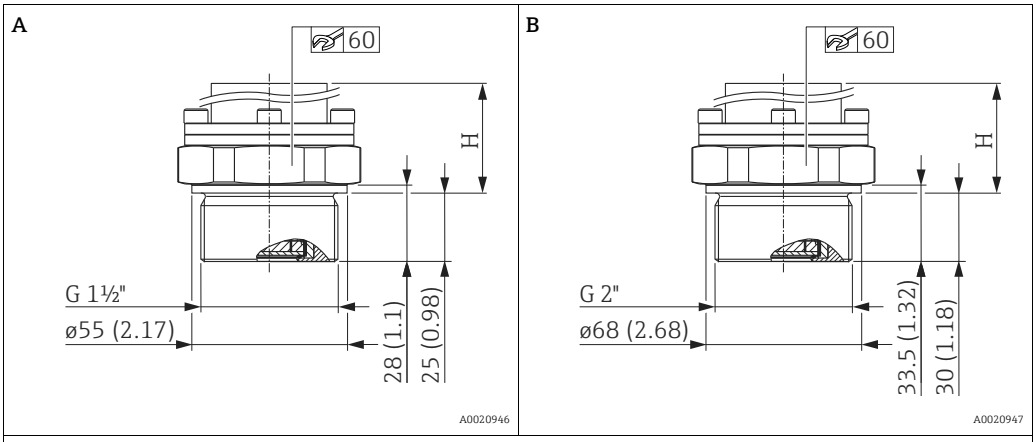

Engineering unit mm (in)

Height H → 📄 50

Position	Designation	Material	Weight kg (lbs)	Option [1]
A	Thread ISO 228 G 1 ½" A	AISI 316L	0.63 (1.39)	1G
		Alloy C276 (2.4819)		1H
		Monel (2.4360)		1J
B	Thread ISO 228 G 2" A	AISI 316L		1K
		Alloy C276 (2.4819)		1L
		Monel (2.4360)		1M

1) Product Configurator, "Process connection" ordering feature

Process connections for PMC71 with flush-mounted process isolating diaphragm

Threaded connection ANSI

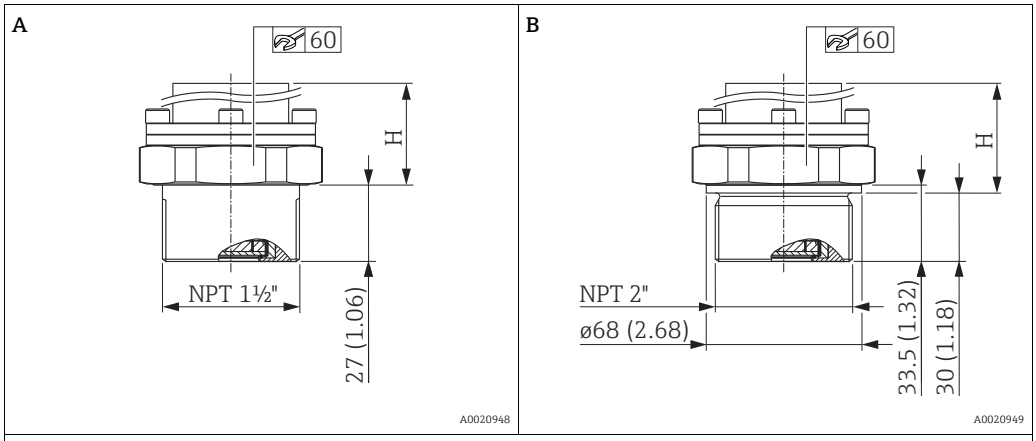

Engineering unit mm (in)

Height H → 📄 50

Position	Designation	Material	Weight kg (lbs)	Approval [1]	Option [2]
A	Thread ANSI 1 ½" MNPT	AISI 316L	0.63 (1.39)	CRN	2D
		Alloy C276 (2.4819)		CRN	2E
		Monel (2.4360)		-	2F
B	Thread ANSI 2" MNPT	AISI 316L		CRN	2G
		Alloy C276 (2.4819)		CRN	2H
		Monel (2.4360)		-	2J

1) CSA approval: Product Configurator, "Approval" ordering feature

2) Product Configurator, "Process connection" ordering feature

Some device versions have CRN approval. For a CRN-approved device, a CRN-approved process connection must be ordered with a CSA approval. These devices are fitted with a separate plate bearing the registration number 0F10525.5C.

Process connections for PMC71 with flush-mounted process isolating diaphragm - height H

Designation	Height H
High-temperature version	86 mm (3.39 in)
High-temperature version with Ex d[ia], CSA XP or FM XP	151 mm (5.94 in)

Process connections for PMC71 with flush-mounted process isolating diaphragm

EN/DIN flanges, connection dimensions as per EN 1092-1/DIN 2527

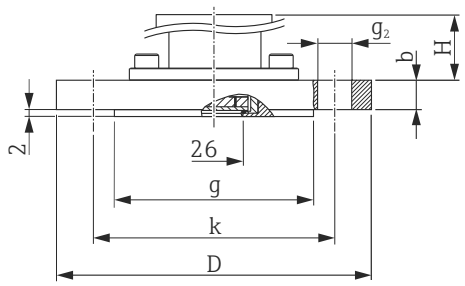

Engineering unit mm

Height H → 📄 53

Flange [1]							Boltholes			Weight	Option [2]
Material	Nominal diameter	Nominal pressure	Shape [3]	Diameter D	Thickness b	Raised face g	Quantity	Diameter g_2	Hole circle k		
				[mm]	[mm]	[mm]		[mm]	[mm]	[kg (lbs)]	
AISI 316L	DN 25	PN 10-40	B1 (D)	115	18	68	4	14	85	1.4 (3.09)	BA
AISI 316L	DN 32	PN 10-40	B1 (D)	140	18	78	4	18	100	2.0 (4.41)	CP
AISI 316L	DN 40	PN 10-40	B1 (D)	150	18	88	4	18	110	2.4 (5.29)	CQ
AISI 316L	DN 50	PN 10-40	B1 (D)	165	20	102	4	18	125	3.2 (7.06)	B3
PVDF [4]	DN 50	PN 10-16	B1 (D)	165	21.4	102	4	18	125	0.6 (1.32)	BR
AISI 316L	DN 50	PN 63 (64)	B2 (D)	180	26	102	4	22	135	4.6 (10.14)	C3
PVDF [4]	DN 80	PN 10-16	B1 (D)	200	21.4	138	8	18	160	1.0 (2.21)	BS
AISI 316L	DN 80	PN 10-40	B1 (D)	200	24	138	8	18	160	5.4 (11.91)	B4

1) The roughness of the surface in contact with the media, including the raised face of the flanges (all standards) made of Hastelloy C, Monel or tantalum, is Ra 0.8 µm (31.5 µin). Lower surface roughness on request.

2) Product Configurator, "Process connection" ordering feature

3) Designation as per DIN 2527 in brackets

4) Only mount with a mounting bracket. MWP 10 bar (150 psi), OPL max. 15 bar (225 psi). Process temperature range −10 to +60 °C (+14 to +140 °F).

Process connections for PMC71 with flush-mounted process isolating diaphragm

ASME flanges, connection dimensions as per ASME B 16.5, raised face RF

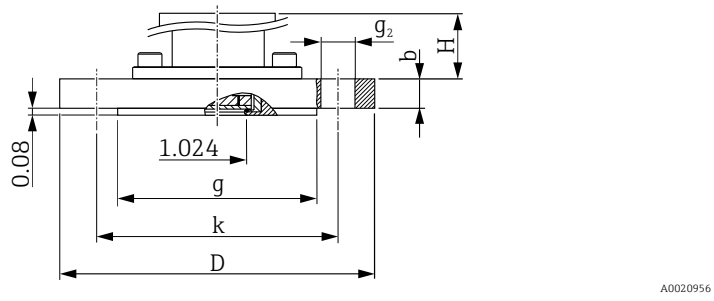

Engineering unit in

Height H → 📄 53

Flange [1]						Boltholes			Weight	Approval [2]	Option [3]
Material	Nominal diameter	Class	Diameter D	Thickness b	Raised face g	Quantity	Diameter g_2	Hole circle k			
	[in]	[lb./sq.in]	[in]	[in]	[in]		[in]	[in]	[kg (lbs)]		
AISI 316/316L [5]	1	150	4.25	1.18	2	4	0.62	3.12	0.9 (1.98)	-	AA [4]
AISI 316/316L [5]	1	300	4.88	1.18	2	4	0.75	3.5	1.4 (3.09)	-	AB [4]
AISI 316/316L [5]	1 ½	150	5	0.69	2.88	4	0.62	3.88	1.0 (2.21)	CRN	AE
AISI 316/316L [5]	1 ½	300	6.12	0.81	2.88	4	0.88	4.5	2.6 (5.73)	CRN	AQ
AISI 316/316L [5]	2	150	6	0.75	3.62	4	0.75	4.75	2.4 (5.29)	CRN	AF
ECTFE [6]	2	150	6	0.75	3.62	4	0.75	4.75	2.4 (5.29)	-	JR
PVDF [7]	2	150	6	0.75	3.62	4	0.75	4.75	0.5 (1.1)	-	A3
AISI 316/316L [5]	2	300	6.5	0.88	3.62	8	0.75	5	3.2 (7.06)	CRN	AR
AISI 316/316L [5]	3	150	7.5	0.94	5	4	0.75	6	4.9 (10.8)	CRN	AG
ECTFE [6]	3	150	7.5	0.94	5	4	0.75	6	4.9 (10.8)	-	JS
PVDF [7]	3	150	7.5	0.94	5	4	0.75	6	0.9 (1.98)	-	A4
AISI 316/316L [5]	3	300	8.25	1.12	5	8	0.88	6.62	6.8 (14.99)	CRN	AS
AISI 316/316L [5]	4	150	9	0.94	6.19	8	0.75	7.5	7.1 (15.66)	CRN	AH
ECTFE [6]	4	150	9	0.94	6.19	8	0.75	7.5	7.1 (15.66)	-	JT
AISI 316/316L [5]	4	300	10	1.25	6.19	8	0.88	7.88	11.6 (25.58)	CRN	AT

1) The roughness of the surface in contact with the media, including the raised face of the flanges (all standards) made of Hastelloy C, Monel or tantalum, is Ra 0.8 µm (31.5 µin). Lower surface roughness on request.

2) CSA approval: Product Configurator, "Approval" ordering feature

3) Product Configurator, "Process connection" ordering feature

4) Screws must be 15 mm (0.59 in) longer than the standard flange screws.

5) Combination of AISI 316 for required pressure resistance and AISI 316L for required chemical resistance (dual rated)

6) ECTFE coating on AISI 316/316L. When operating in hazardous areas, avoid electrostatic charge of the plastic surfaces.

7) Only mount with a mounting bracket. MWP 10 bar (150 psi), OPL max. 15 bar (225 psi). Process temperature range −10 to +60 °C (+14 to +140 °F).

Some device versions have CRN approval. For a CRN-approved device, a CRN-approved process connection must be ordered with a CSA approval. These devices are fitted with a separate plate bearing the registration number 0F10525.5C.

Process connections for PMC71 with flush-mounted process isolating diaphragm

JIS flanges, connection dimensions as per JIS B 2220 BL, raised face RF

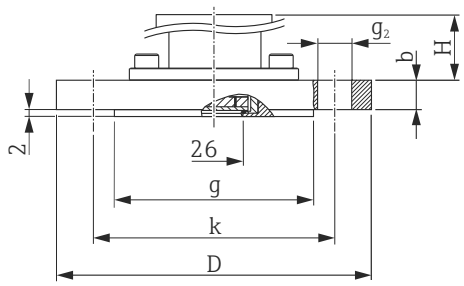

Engineering unit mm

Height H → 📄 53

Flange [1]						Boltholes			Weight	Option [2]
Material	Nominal diameter	Nominal pressure	Diameter D	Thickness b	Raised face g	Quantity	Diameter g_2	Hole circle k		
			[mm]	[mm]	[mm]		[mm]	[mm]	[kg (lbs)]	
AISI 316L (1.4435)	50 A	10 K	155	16	96	4	19	120	2.0 (4.41)	KF
	80 A	10 K	185	18	127	8	19	150	3.3 (7.28)	KL
	100 A	10 K	210	18	151	8	19	175	4.4 (9.7)	KH

1) The roughness of the surface in contact with the media, including the raised face of the flanges (all standards) made of Alloy C, Monel or tantalum, is Ra 0.8 µm (31.5 µin). Lower surface roughness on request.

2) Product Configurator, "Process connection" ordering feature

Process connections for PMC71 with flush-mounted process isolating diaphragm - height H

Designation	Height H
High-temperature version	86 mm (3.39 in)
High-temperature version with Ex d[ia], CSA XP or FM XP	151 mm (5.94 in)

Hygienic process connections for PMC71 with flush-mounted process isolating diaphragm

Many process connections with an EPDM or HNBR seal are approved for the PMC71 in accordance with the guidelines of the 3A Sanitary Standard. To ensure that the 3A approval is valid for the PMC71 version, a 3A-approved process connection together with an EPDM or HNBR seal must be selected when ordering (Product Configurator, "Seal" ordering feature).

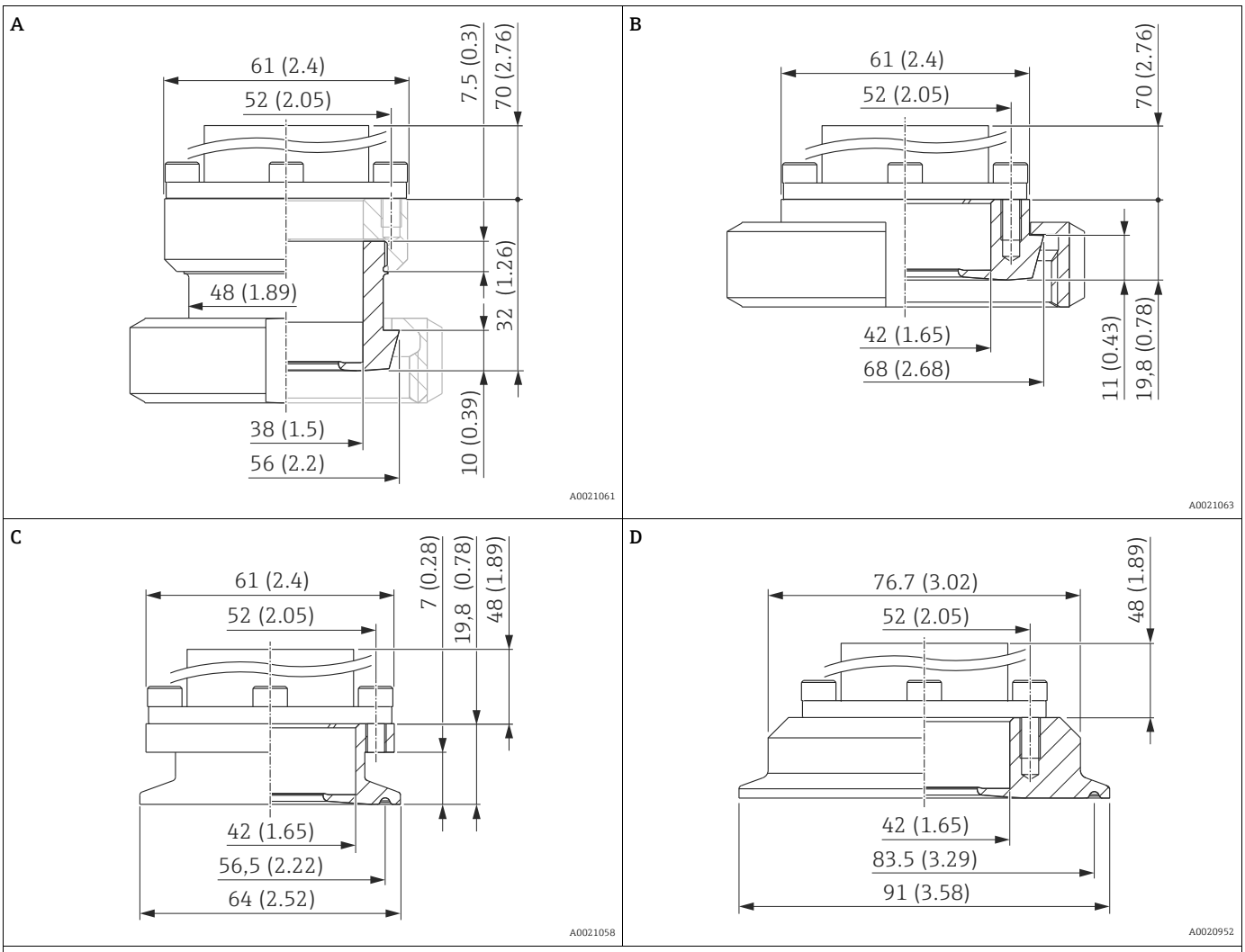

Engineering unit mm (in)

Position	Designation	Nominal pressure	Material [1]	Weight kg (lbs)	Approval [2]	Option [3]
A	DIN 11851 DN 40, with HNBR or EPDM seal	PN 25	AISI 316L (1.4435)	0.7 (1.54)	EHEDG, 3A, CRN	MP [4]
B	DIN 11851 DN 50, with HNBR or EPDM seal	PN 25		0.9 (1.98)	EHEDG, 3A, CRN	MR [4]
C	Tri-Clamp ISO 2852 DN 51 (2"), with HNBR or EPDM seal	PN 40[5]		0.7 (1.54)	EHEDG, 3A, CRN	TD [4]
D	Tri-Clamp ISO 2852 DN 76.1 (3"), with HNBR or EPDM seal	PN 40 [5]		0.9 (1.98)	EHEDG, 3A, CRN	TF [4]

1) The roughness of the surfaces in contact with the medium is R_a ≤0.80 µm (31.5 µin) as standard. Lower surface roughness on request.

2) CSA approval: Product Configurator, "Approval" ordering feature

3) Product Configurator, "Process connection" ordering feature

4) Endress+Hauser supplies these slotted nuts in stainless steel AISI 304 (DIN/EN material number 1.4301) or in AISI 304L (DIN/EN material number 1.4307).

5) Restricted nominal pressure (13.8 bar (200 psi)) for the following approvals: Product configurator "Approval" ordering feature, option "E", "U" and "V".

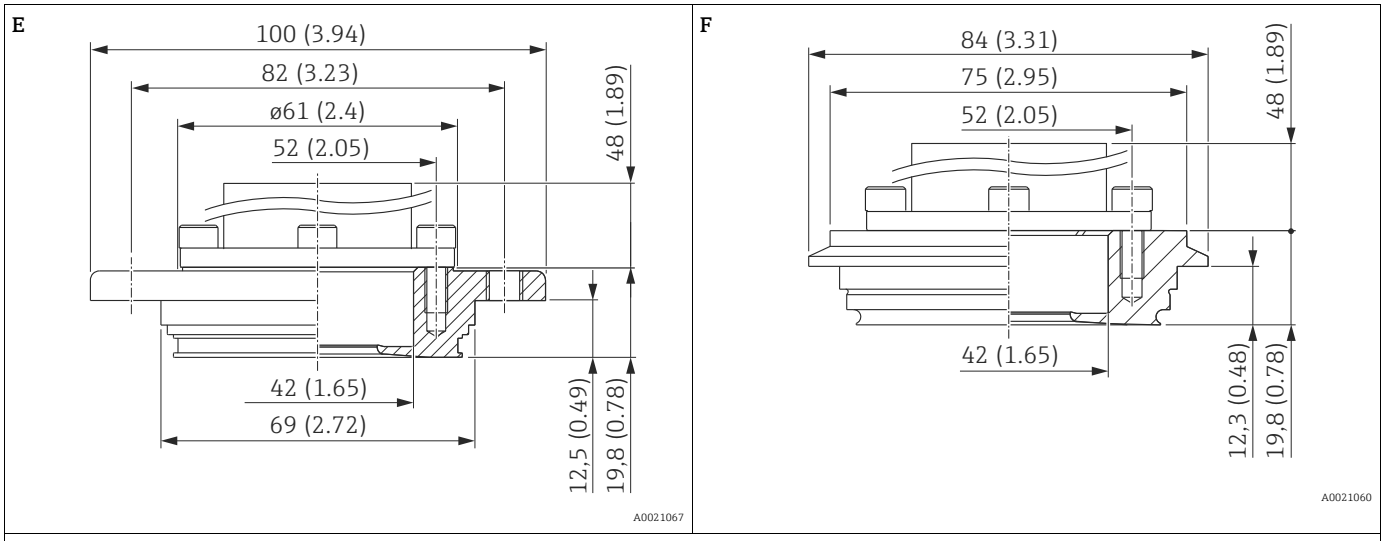

Engineering unit mm (in)

Position [1]	Designation	Nominal pressure	Material	Weight kg (lbs)	Approval [2]	Option [3]
E	DRD DN50 (65 mm), with HNBR or EPDM seal	PN 25	AISI 316L (1.4435)	0.9 (1.98)	EHEDG	TK[4]
F	Varivent type N for pipes 40 – 162, with HNBR or EPDM seal	PN 40		1 (2.21)	EHEDG, 3A, CRN	TR [4]

1) The roughness of the surfaces in contact with the medium is R_a ≤0.80 µm (31.5 µin) as standard. Lower surface roughness on request.

2) CSA approval: Product Configurator, "Approval" ordering feature

3) Product Configurator, "Process connection" ordering feature

4) Endress+Hauser supplies these slotted nuts in stainless steel AISI 304 (DIN/EN material number 1.4301) or in AISI 304L (DIN/EN material number 1.4307).

Some device versions have CRN approval. For a CRN-approved device, a CRN-approved process connection must be ordered with a CSA approval. These devices are fitted with a separate plate bearing the registration number 0F10525.5C.

Process connections for PMP71 with internal process isolating diaphragm

Threaded connection ISO 228 G

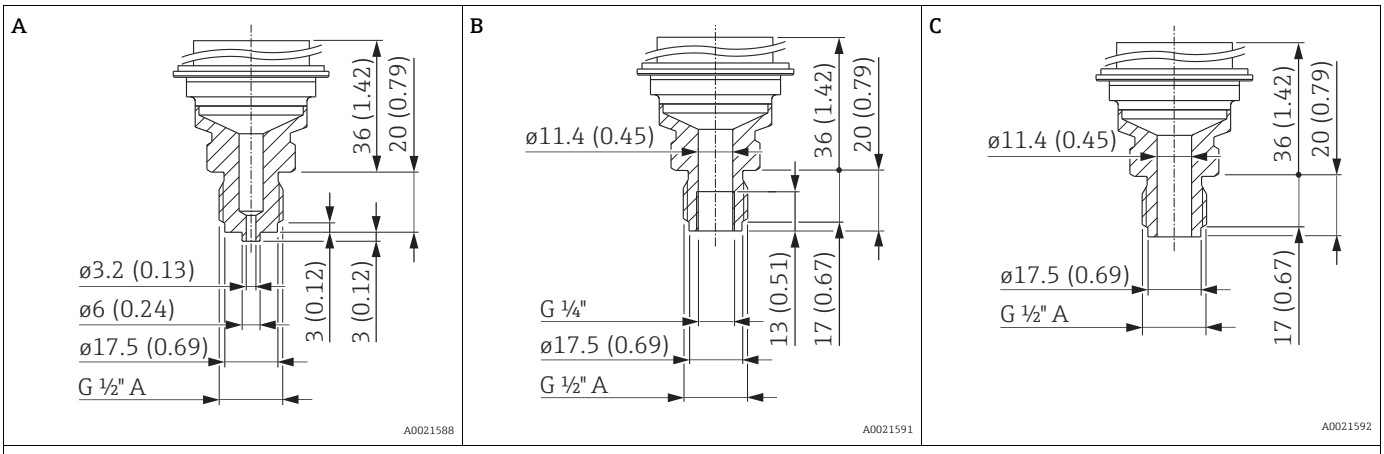

Engineering unit mm (in)

Position	Designation	Material	Weight kg (lbs)	Option [1]
A	Thread ISO 228 G ½" A EN 837	AISI 316L	0.63 (1.39)	GA
		Alloy C276 (2.4819)		GB
		PVDF ▪ Only mount with a mounting bracket ▪ MWP 10 bar (150 psi), OPL max. 15 bar (225 psi) ▪ Process temperature range: +10 to +60 °C (+14 to +140 °F)		GD
B	Thread ISO 228 G ½" A G ¼" (female) EN 837	AISI 316L		GE
		Alloy C276 (2.4819)		GF
C	Thread ISO 228 G ½" A EN 837, bore 11.4 mm (0.45 in)	AISI 316L		GH
		Alloy C276 (2.4819)		GJ

1) Product Configurator, "Process connection" ordering feature

Process connections for PMP71 with internal process isolating diaphragm

Threaded connection ANSI

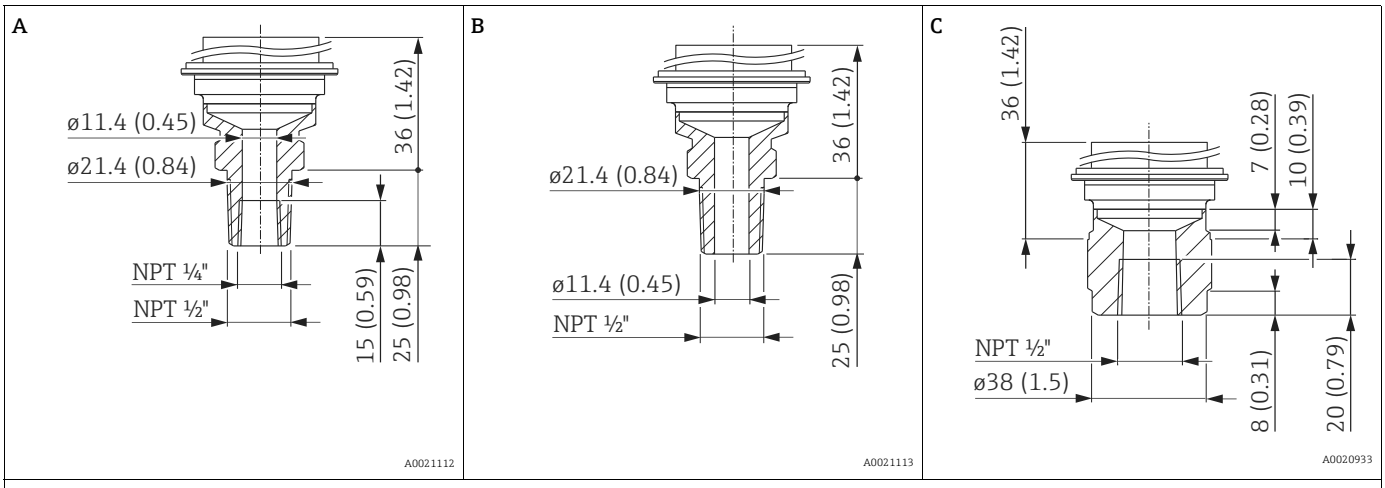

Engineering unit mm (in)

Position	Designation	Material	Weight kg (lbs)	Approval [1]	Option [2]
A	ANSI ½" MNPT, ¼" FNPT	AISI 316L	0.63 (1.39)	CRN	RA
		Alloy C276 (2.4819)		CRN	RB
B	ANSI ½" MNPT, Bore 11.4 mm (0.45 in) (400 bar (6000 psi)) (Bore 3.2 mm (0.13 in) (700 bar (10500 psi)))	AISI 316L		CRN	RD
		Alloy C276 (2.4819)		CRN	RE
C	ANSI ½" FNPT	AISI 316L	0.7 (1.54)	CRN	RH
		Alloy C276 (2.4819)		CRN	RJ

1) CSA approval: Product Configurator, "Approval" ordering feature

2) Product Configurator, "Process connection" ordering feature

Some device versions have CRN approval. For a CRN-approved device, a CRN-approved process connection must be ordered with a CSA approval. These devices are fitted with a separate plate bearing the registration number 0F10525.5C.

Process connections for PMP71 with internal process isolating diaphragm

Threaded connection JIS

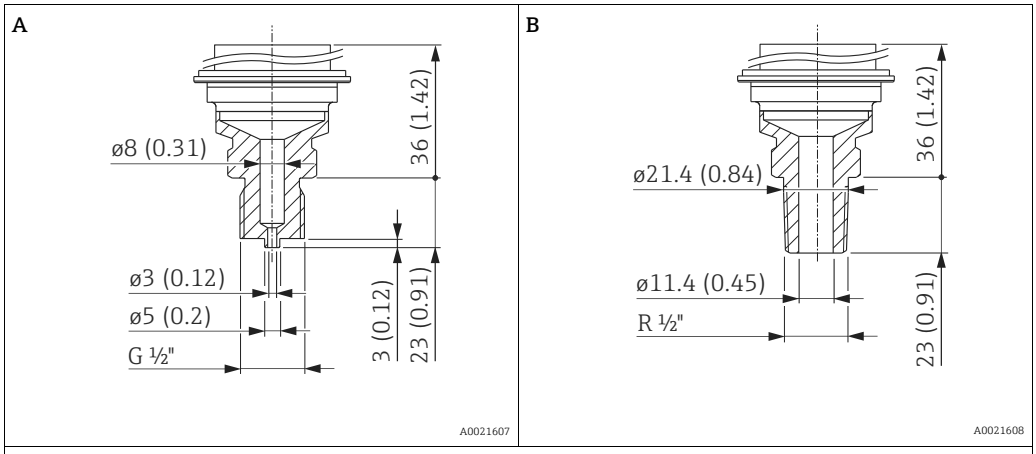

Engineering unit mm (in)

Position	Designation	Material	Weight kg (lbs)	Option [1]
A	JIS B0202 G ½" (male)	AISI 316L	0.6 (1.32)	GL
B	JIS B0203 R ½" (male)			RL

1) Product Configurator, "Process connection" ordering feature

Threaded connection DIN 13

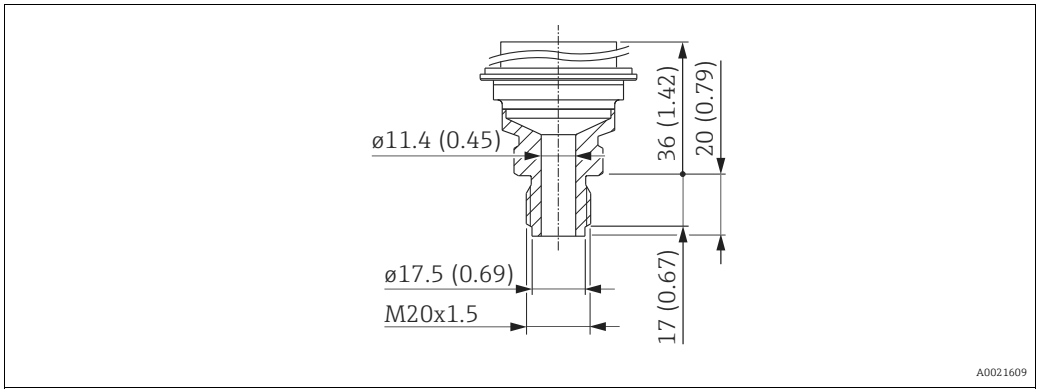

Engineering unit mm (in)

Designation	Material	Weight kg (lbs)	Option [1]
DIN 13 M20 x 1.5, EN 837 Bore 11.4 mm (0.45 in)	AISI 316L	0.6 (1.32)	GP
	Alloy C276 (2.4819)		GQ

1) Product Configurator, "Process connection" ordering feature

Process connections for PMP71 with flush-mounted process isolating diaphragm

Threaded connection ISO 228 G

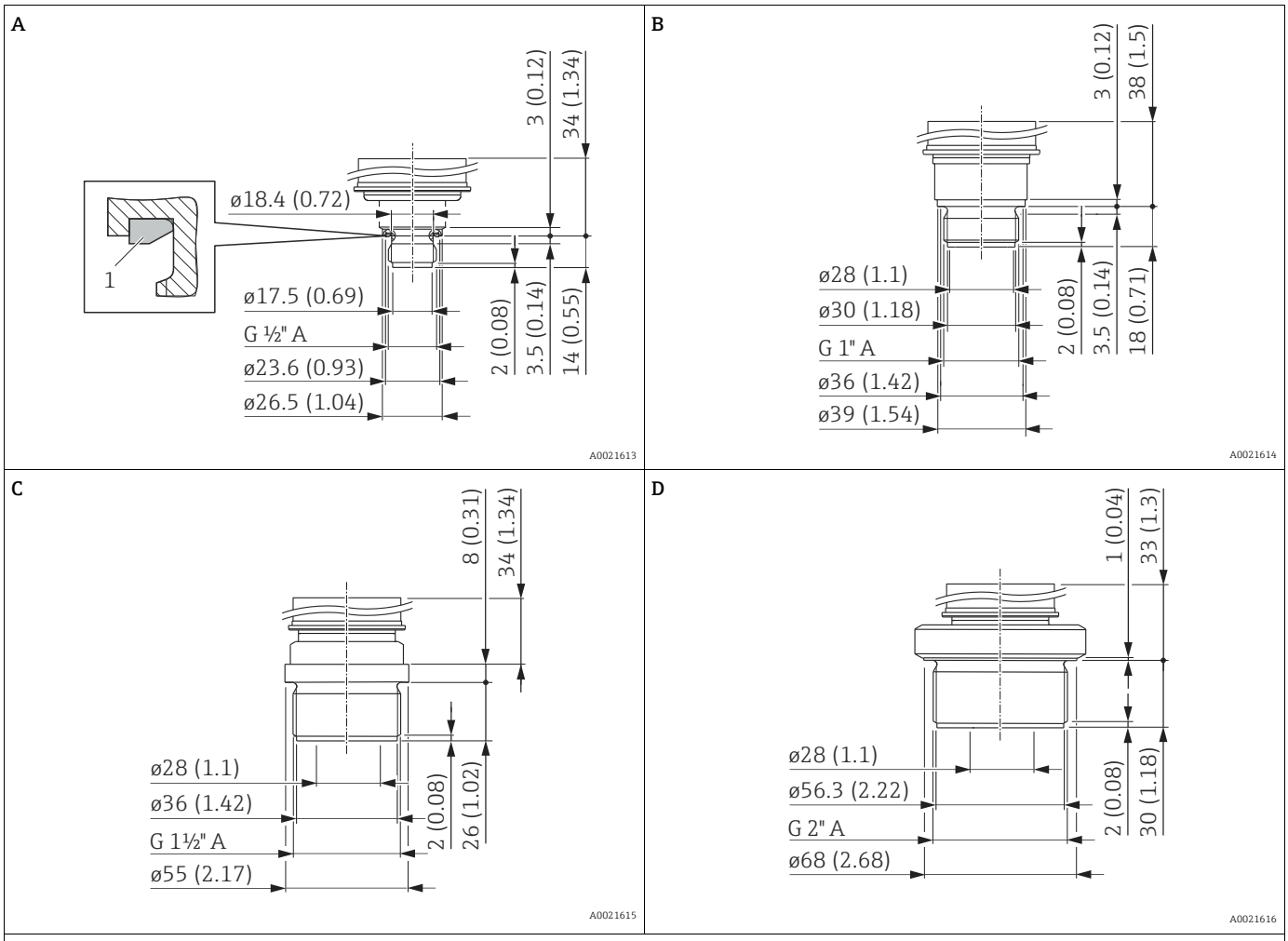

Engineering unit mm (in)

Position	Designation	Material	Weight kg (lbs)	Option [1]
A	Thread ISO 228 G ½" A DIN 3852 FKM seal (item 1) pre-installed	AISI 316L	0.4 (0.88)	1A
		Alloy C276 (2.4819)		1B
B	Thread ISO 228 G 1" A	AISI 316L	0.7 (1.54)	1D
		Alloy C276 (2.4819)		1E
C	Thread ISO 228 G 1½" A	AISI 316L	1.1 (2.43)	1G
		Alloy C276 (2.4819)		1H
D	Thread ISO 228 G 2" A	AISI 316L	1.5 (3.31)	1K
		Alloy C276 (2.4819)		1L

1) Product Configurator, "Process connection" ordering feature

Threaded connection DIN

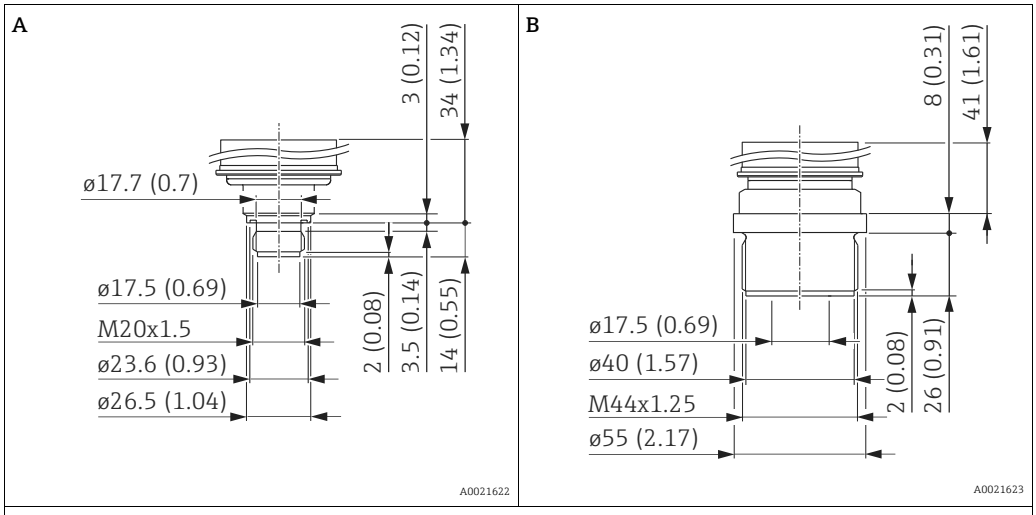

Engineering unit mm (in)

Position	Designation	Material	Weight kg (lbs)	Option [1]
A	Thread DIN 16288 M20	AISI 316L	0.4 (0.88)	1N
		Alloy C276 (2.4819)		1P
B	Thread DIN 13 M44 x 1.25	AISI 316L	1.1 (2.43)	1R
		Alloy C276 (2.4819)		1S

1) Product Configurator, "Process connection" ordering feature

Process connections for PMP71 with flush-mounted process isolating diaphragm

Threaded connection ANSI

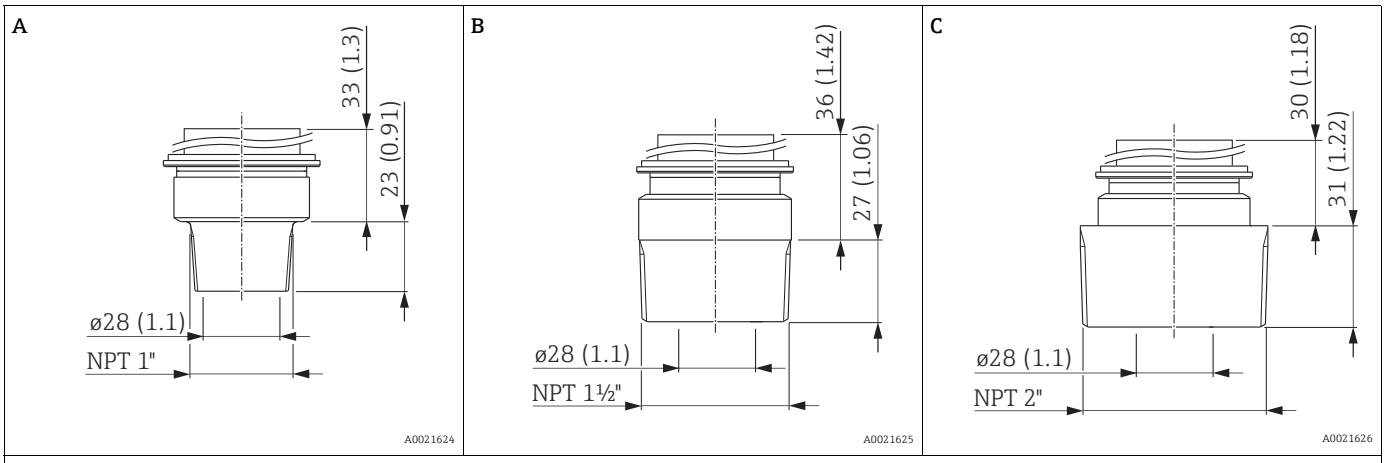

Engineering unit mm (in)

Position	Designation	Material	Weight kg (lbs)	Approval [1]	Option [2]
A	ANSI 1" MNPT	AISI 316L	0.7 (1.54)	CRN	2A
		Alloy C276 (2.4819)		CRN	2B
B	ANSI 1 ½" MNPT	AISI 316L	1 (2.21)	CRN	2D
		Alloy C276 (2.4819)		CRN	2E
C	ANSI 2" MNPT	AISI 316L	1.3 (2.87)	CRN	2G
		Alloy C276 (2.4819)		CRN	2H

1) CSA approval: Product Configurator, "Approval" ordering feature

2) Product Configurator, "Process connection" ordering feature

Some device versions have CRN approval. For a CRN-approved device, a CRN-approved process connection must be ordered with a CSA approval. These devices are fitted with a separate plate bearing the registration number 0F10525.5C.

Process connections for PMP71 with flush-mounted process isolating diaphragm

EN/DIN flanges, connection dimensions as per EN 1092-1/DIN 2527

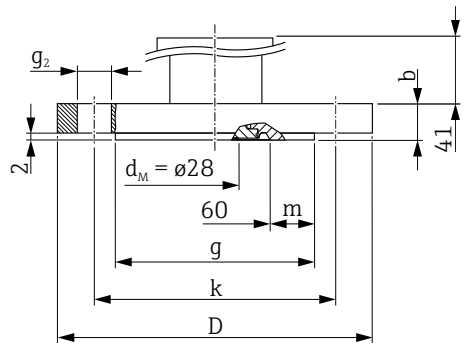

Engineering unit mm

Flange [1) 2)]							Boltholes			Flange weight	Option [3)]
Nominal diameter	Nominal pressure	Shape [4)]	Diameter D	Thickness b	Raised face g	Width of raised face (m)	Quantity	Diameter g_2	Hole circle k		
			[mm]	[mm]	[mm]	[mm]		[mm]	[mm]	[kg]	
DN 25	PN 10-40	B1 (D)	115	18	68 [5)]	4	4	14	85	1.2 (2.65)	CN
DN 32	PN 10-40	B1 (D)	140	18	78 [5)]	9	4	18	100	1.9 (4.19)	CP
DN 40	PN 10-40	B1 (D)	150	18	88 [5)]	14	4	18	110	2.2 (4.85)	CQ
DN 50	PN 10-40	B1 (D)	165	20	102	-	4	18	125	3.0 (6.62)	B3
DN 80	PN 10-40	B1 (D)	200	24	138	-	8	18	160	5.3 (11.69)	B4

1) The roughness of the surface in contact with the media, including the raised face of the flanges (all standards) made of Alloy C, Monel or tantalum is Ra <0.8 µm (31.5 µin). Lower surface roughness on request.

2) Material: AISI 316L

3) Product Configurator, "Process connection" ordering feature

4) Designation as per DIN 2527 in brackets

5) With these process connections the raised face is smaller than described in the standard. Due to a smaller raised face a special seal must be used. Refer to a manufacturer of seals or your local Endress+Hauser Sales Center.

Process connections for PMP71 with flush-mounted process isolating diaphragm

ASME flanges, connection dimensions as per ASME B 16.5, raised face RF*

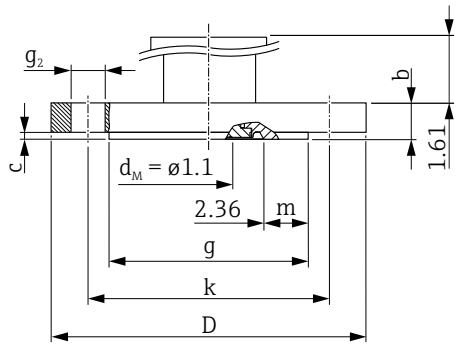

*(*all apart from AN, see table below)*

Engineering unit in

Flange [1]							Boltholes			Weight	Approval [2]	Option [3]
Nominal diameter	Class/ Nominal pressure	Diameter D	Thickness b	Diameter of raised face g	Thickness of raised face c	Width of raised face (m)	Quantity	Diameter g_2	Hole circle k			
[in]	[lb./sq.in]	[in]	[in]	[in]	[in]	[in]		[in]	[in]	[kg]		
1	300	4.88	0.69	2 [4]	0.06	0.2	4	0.75	3.5	1.3 (2.87)	CRN	AN
1 ½	150	5	0.69	2.88 [4]	0.08	0.52	4	0.62	3.88	1.5 (3.31)	CRN	AE
1 ½	300	6.12	0.81	2.88 [4]	0.08	0.52	4	0.88	4.5	2.6 (5.73)	CRN	AQ
2	150	6	0.75	3.62	0.08	-	4	0.75	4.75	2.4 (5.29)	CRN	AF
2	300	6.5	0.88	3.62	0.08	-	8	0.75	5	3.2 (7.06)	CRN	AR
3	150	7.5	0.94	5	0.08	-	4	0.75	6	4.9 (10.8)	CRN	AG
3	300	8.25	1.12	5	0.08	-	8	0.88	6.62	6.7 (14.77)	CRN	AS
4	150	9	0.94	6.19	0.08	-	8	0.75	7.5	7.1 (15.66)	CRN	AH
4	300	10	1.25	6.19	0.08	-	8	0.88	7.88	11.6 (25.88)	CRN	AT

1) Material: AISI 316/316L; Combination of AISI 316 for required pressure resistance and AISI 316L for required chemical resistance (dual rated)

2) CSA approval: Product Configurator, "Approval" ordering feature

3) Product Configurator, "Process connection" ordering feature

4) With these process connections the raised face is smaller than described in the standard. Due to a smaller raised face a special seal must be used. Refer to a manufacturer of seals or your local Endress+Hauser Sales Center.

Some device versions have CRN approval. For a CRN-approved device, a CRN-approved process connection must be ordered with a CSA approval. These devices are fitted with a separate plate bearing the registration number 0F10525.5C.

Process connections for PMP71 with flush-mounted process isolating diaphragm

JIS flanges, connection dimensions as per JIS B 2220 BL, raised face RF

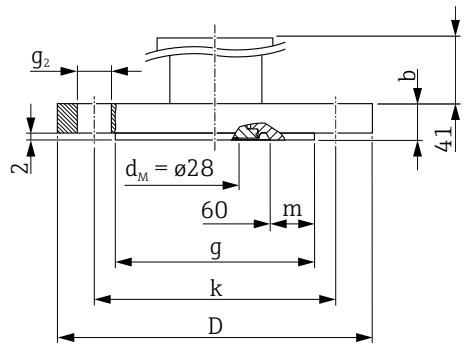

Engineering unit mm

Flange [1]							Boltholes			Flange weight	Option [2]
Material	Nominal diameter	Class/ nominal pressure	Diameter D	Thickness b	Diameter of raised face g	Width of raised face (m)	Quantity	Diameter g_2	Hole circle k		
			[mm]	[mm]	[mm]	[mm]		[mm]	[mm]	[kg]	
AISI 316L	25 A	20 K	125	16	67 [3]	3.5	4	19	90	1.5 (3.31)	KA
AISI 316L	50 A	10 K	155	16	96	-	4	19	120	2.0 (4.41)	KF
AISI 316L	80 A	10 K	185	18	127	-	8	19	150	3.3 (7.28)	KL
AISI 316L	100 A	10 K	210	18	151	-	8	19	175	4.4 (9.7)	KH

1) The roughness of the surface in contact with the media, including the raised face of the flanges (all standards) made of Alloy C, Monel or tantalum is Ra <0.8 µm (31.5 µin). Lower surface roughness on request.

2) Product Configurator, "Process connection" ordering feature

3) With these process connections the raised face is smaller than described in the standard. Due to a smaller raised face a special seal must be used. Refer to a manufacturer of seals or your local Endress+Hauser Sales Center.

Process connections for PMP71

Oval flange

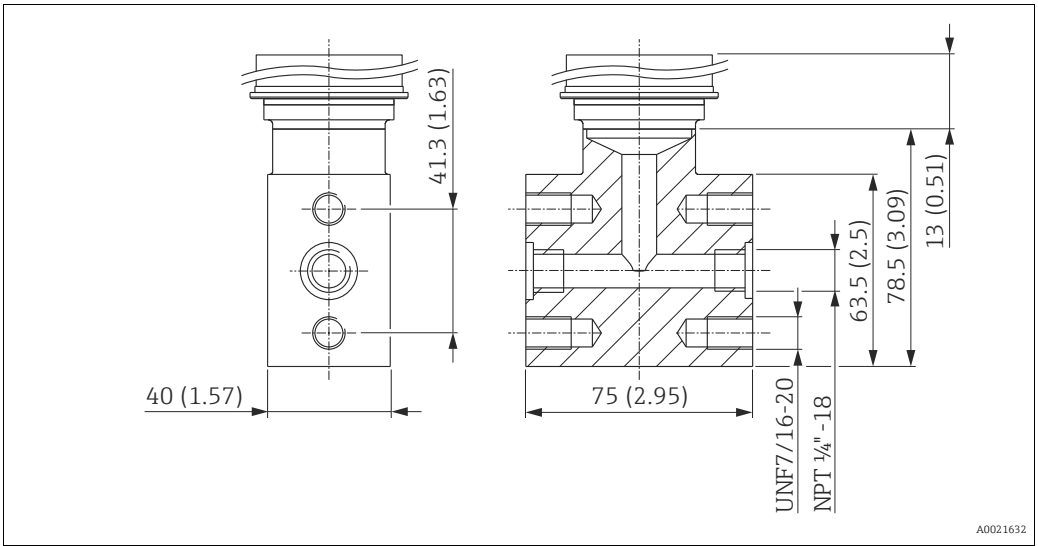

Engineering unit mm (in)

Material	Designation	Weight kg (lbs)	Approval [1]	Option [2]
AISI 316L (1.4404)	Oval flange adapter 1/4-18 NPT as per IEC 61518 Mounting: 7/16-20 UNF	1.9 (4.19)	CRN	UR (CRN)

1) CSA approval: Product Configurator, "Approval" ordering feature

2) Product Configurator, "Process connection" ordering feature

Some device versions have CRN approval. For a CRN-approved device, a CRN-approved process connection must be ordered with a CSA approval. These devices are fitted with a separate plate bearing the registration number 0F10525.5C.

Process connections for PMP71

Prepared for diaphragm seal mount

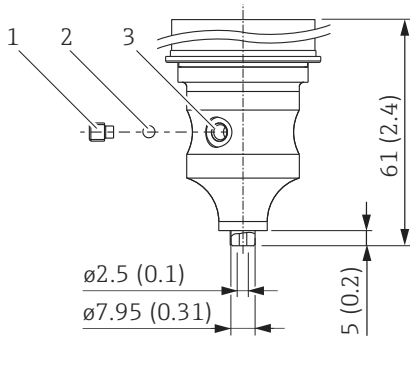

1 Setscrew with hexagonal recess 4 mm (0.16 in), material A2-70
2 Bearing DIN 5401 (1.3505)
3 Hole for filling fluid

Engineering unit mm (in)

Material	Designation	Weight kg (lbs)	Approval [1]	Option [2]
AISI 316L (1.4404)	Prepared for diaphragm seal mount	1.9 (4.19)	CRN	U1

1) CSA approval: Product Configurator, "Approval" ordering feature

2) Product Configurator, "Process connection" ordering feature

Some device versions have CRN approval. For a CRN-approved device, a CRN-approved process connection must be ordered with a CSA approval. These devices are fitted with a separate plate bearing the registration number 0F10525.5C.

PMP75 basic device

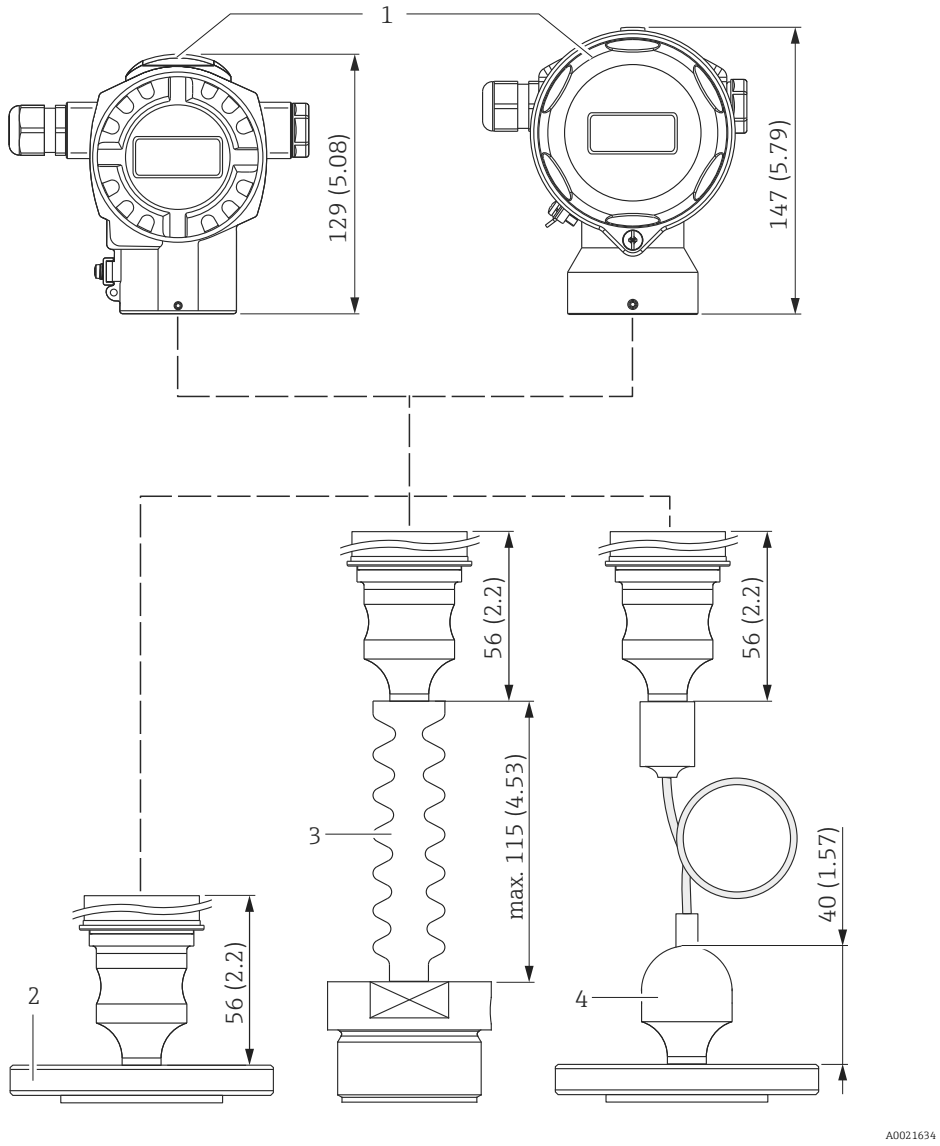

PMP75 basic device with diaphragm seal

1 PMP75 basic device
2 Diaphragm seal, here e.g. flange diaphragm seal
3 Diaphragm seal with temperature isolator
4 Process connections with capillary tubes are 40 mm (1.57 in) higher than process connections without capillary tubes

Engineering unit mm (in)

Process connections for PMP75 with flush-mounted process isolating diaphragm

- The weights of the diaphragm seals are given in the tables. See → 44 ff for the weight of the housing.
- The following drawings are drawings that illustrate how the system works in principle. In other words, the dimensions of a diaphragm seal supplied can deviate from the dimensions given in this document.
- With the use of high-temperature oils the design can deviate strongly.
- Observe the information in the "Planning instructions, diaphragm seal systems" section → 95 ff.
- For further information please contact your local Endress+Hauser Sales Center.

Diaphragm seal cell structure

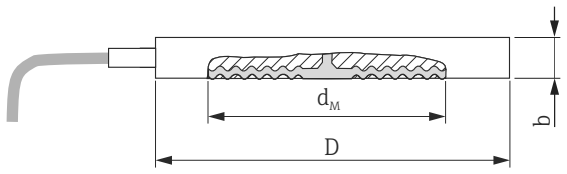

Engineering unit mm (in)

Flange					Diaphragm seal		Approval [1]	Option [2]
Material	Nominal diameter	Nominal pressure [3]	Max. diameter D	Thickness b	Max. diameter of the process isolating diaphragm d_M	Weight of two diaphragm seals		
			[mm]	[mm]	[mm]	[kg (lbs)]		
AISI 316L	DN 50	PN 16-400	102	20	59	2.6 (5.73)	-	UI
	DN 80	PN 16-400	138	20	89	4.6 (10.14)	-	UJ
	DN 100	PN 16-400	162	20	89	6.2 (13.67)	-	UK
	[in]	[lb/sq.in]	[in (mm)]	[in (mm)]	[in (mm)]	[kg]		
	2	150-2500	4.01 (102)	0.79 (20)	2.32 (59)	2.6 (5.73)	CRN	UL
	3	150-2500	5.35 (136)	0.79 (20)	3.50 (89)	4.6 (10.14)	CRN	UM
	4	150-2500	6.22 (158)	0.79 (20)	3.50 (89)	6.2 (13.67)	CRN	UR

1) CSA approval: Product Configurator, "Approval" ordering feature

2) Product Configurator, "Process connection" ordering feature

3) The specified nominal pressure applies to the diaphragm seal. The maximum pressure for the measuring device is dependent on the lowest-rated element, with regard to pressure, of the selected components (see also → 42, "Pressure specifications" section).

Some device versions have CRN approval. For a CRN-approved device, a CRN-approved process connection must be ordered with a CSA approval. These devices are fitted with a separate plate bearing the registration number 0F10525.5C.

Process connections for PMP75 with flush-mounted process isolating diaphragm

Thread ISO 228 and ANSI

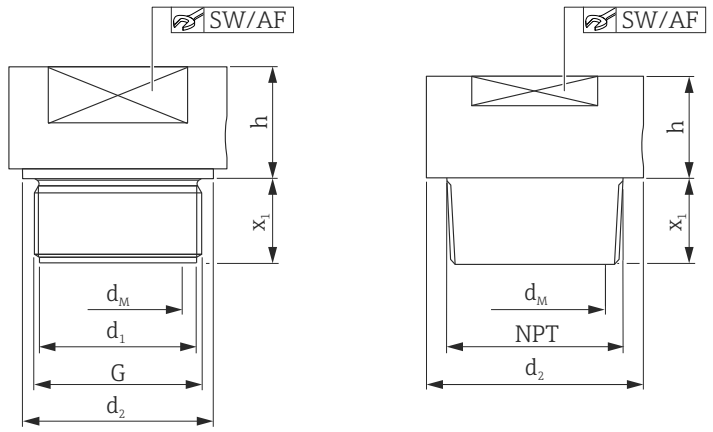

Left: thread ISO 228, right: thread ANSI

Engineering unit mm (in)

Threaded connections							Diaphragm seal			Approval [1]	Option [2]
Material	Thread	Nominal pressure PN	Diameter d_1	Diameter d_2	Screw-in length x_1	Across flats SW/AF	Max. diameter of the process isolating diaphragm d_M	Height h	Weight		
			[mm]	[mm]	[mm]		[mm]	[mm]	[kg (lbs)]		
AISI 316L	G 1" A	400	30	39	21 [3]	41	30	19	0.4 (0.88)	-	1D
Alloy C276									0.5 (1.1)	-	1E
AISI 316L	G 1 ½" A	400	44	55	30	50	42	20	0.9 (1.98)	-	1G
Alloy C276									1.0 (2.21)	-	1H
AISI 316L	G 2"	400	56	68	30	65	50	20	1.9 (4.19)	-	1K
Alloy C276									2.1 (4.63)	-	1L
AISI 316L	1" MNPT	400	–	48	28	41	24	37	0.6 (1.32)	CRN	2A
Alloy C276									0.7 (1.54)	CRN	2B
AISI 316L	1 ½" MNPT	400	–	60	30	41	36	20	0.9 (1.98)	CRN	2D
Alloy C276									1.0 (2.21)	CRN	2E
AISI 316L	2" MNPT	400	–	78	30	65	38	35	1.8 (3.97)	CRN	2G
Alloy C276									2.0 (4.41)	CRN	2H

1) CSA approval: Product Configurator, "Approval" ordering feature

2) Product Configurator, "Process connection" ordering feature

3) 28 mm (1.1 in) in conjunction with high-temperature oil

Some device versions have CRN approval. For a CRN-approved device, a CRN-approved process connection must be ordered with a CSA approval. These devices are fitted with a separate plate bearing the registration number 0F10525.5C.

Process connections for PMP75 with flush-mounted process isolating diaphragm

Tri-Clamp ISO 2852

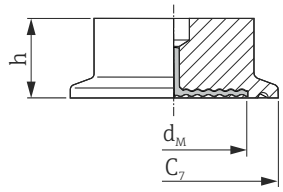

Engineering unit mm (in)

Material[1]	Nominal diameter ISO 2852	Nominal diameter DIN 32676	Nominal diameter	Diameter	Max. diameter of the process isolating diaphragm		Height	Weight	Approval [2]	Option [3]
					standard	with TempC diaphragm				
			[in]	C_7 [mm]	d_M [mm]	d_M [mm]	h [mm]	[kg (lbs)]		
AISI 316L	ND 25 / 33.7	DN 25	1	50.5	24	-	37	0.32 (0.71)	EHEDG, 3A, CRN	TB
	ND 38	DN 40	1 ½	50.5	36	36	30	1 (2.21)	EHEDG, 3A, CRN	TC [4] [5]
	ND 51 / 40	DN 50	2	64	48	41	30	1.1 (2.43)	EHEDG, 3A, CRN	TD [4] [5]
	ND 63.5	DN 50	2 ½	77.5	61	61	30	0.7 (1.54)	EHEDG, 3A, CRN	TE [6]
	ND 76,1	–	3	91	73	61	30	1.2 (2.65)	EHEDG, 3A, CRN	TF [5]

1) The roughness of the surfaces in contact with the medium is $R_a \leq 0.76$ µm (29.9 µin) as standard.

2) CSA approval: Product Configurator, "Approval" ordering feature

3) Product Configurator, "Process connection" ordering feature

4) Diaphragm seal versions optionally in conformity with ASME-BPE for use in biochemical processes, wetted surfaces $R_a \leq 0.38$ µm (0.15 µin), electropolished; to be ordered using ordering feature "Additional option", option "P" in the order code.

5) Alternatively available with TempC diaphragm.

6) With TempC diaphragm

Some device versions have CRN approval. For a CRN-approved device, a CRN-approved process connection must be ordered with a CSA approval. These devices are fitted with a separate plate bearing the registration number 0F10525.5C.

Process connections for PMP75 with flush-mounted process isolating diaphragm

Tri-Clamp pipe diaphragm seal ISO 2852

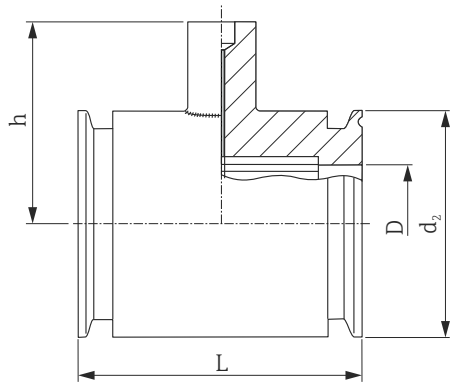

Engineering unit mm (in)

Material[1]	Nominal diameter ISO 2852	Nominal diameter	Nominal pressure	Diameter	Diameter	Height	Face-to-face length	Weight	Approval [2]	Option [3]
		[in]		D [in]	d_2 [mm]	h [mm]	L [mm]	[kg (lbs)]		
AISI 316L	DN 25	1	PN 40	22.5	50.5	67	126	1.7 (3.75)	3A, CRN	SB
	DN 38	1 ½	PN 40	35.5	50.5	67	126	1.0 (2.21)	3A, CRN	SC [4]
	DN 51	2	PN 40	48.6	64	79	100	1.7 (3.75)	3A, CRN	SD [4]

1) The roughness of the surfaces in contact with the medium is $R_a \leq 0.8$ µm (31.5 µin) as standard. Lower surface roughness on request.

2) CSA approval: Product Configurator, "Approval" ordering feature

3) Product Configurator, "Process connection" ordering feature

4) Including 3.1 and pressure test as per Pressure Equipment Directive, category II

Some device versions have CRN approval. For a CRN-approved device, a CRN-approved process connection must be ordered with a CSA approval. These devices are fitted with a separate plate bearing the registration number 0F10525.5C.

Hygienic process connections for PMP75 with flush-mounted process isolating diaphragm

Varivent for pipes

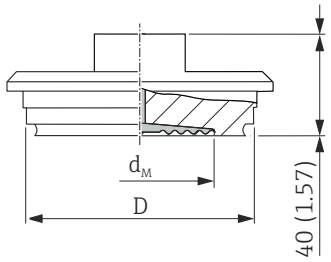

Engineering unit mm (in)

Material [1]	Designation	Nominal pressure	Diameter	Max. diameter of the process isolating diaphragm		Weight	Approval [2]	Option [3]
				standard	with TempC diaphragm			
			D	d_M [mm]	d_M [mm]	[kg (lbs)]		
AISI 316L	Type F for pipes DN 25 - DN 32	PN 40	71	34	36	0.4 (0.88)	EHEDG, 3A	TU [4]
AISI 316L	Type N for pipes DN 40 - DN 162	PN 40	68	58	61	0.8 (1.76)	EHEDG, 3A, CRN	TR [5] [6]

1) The roughness of the surfaces in contact with the medium is $R_a \leq 0.76$ µm (29.9 µin) as standard. Lower surface roughness on request.

2) CSA approval: Product Configurator, "Approval" ordering feature

3) Product Configurator, "Process connection" ordering feature

4) With TempC diaphragm

5) Diaphragm seal versions optionally in conformity with ASME-BPE for use in biochemical processes, wetted surfaces $R_a \leq 0.38$ µm (15 µin), electropolished; to be ordered using ordering feature "Additional option", option "P" in the order code.

6) Alternatively available with TempC diaphragm.

Some device versions have CRN approval. For a CRN-approved device, a CRN-approved process connection must be ordered with a CSA approval. These devices are fitted with a separate plate bearing the registration number 0F10525.5C.

Hygienic process connections for PMP75 with flush-mounted process isolating diaphragm

DRD DN50 (65 mm)

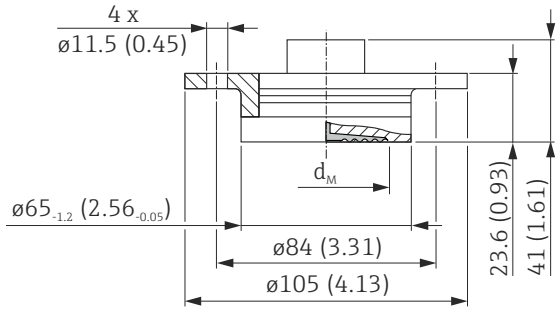

Engineering unit mm (in)

Material [1]	Nominal pressure	Max. diameter of the process isolating diaphragm		Weight	Option [2]
		standard	with TempC diaphragm		
		d_M [mm]	d_M [mm]	[kg (lbs)]	
AISI 316L	PN 25	50	48	0.75 (1.65)	TK [3]

1) The roughness of the surfaces in contact with the medium is $R_a \leq 0.76$ µm (29.9 µin) as standard.

2) Product Configurator, "Process connection" ordering feature

3) Alternatively available with TempC diaphragm.

SMS nozzles with slotted nut

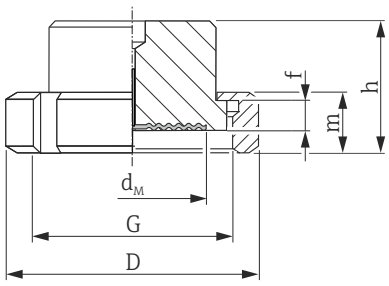

Engineering unit mm (in)

Material [1]	Nominal diameter	Nominal pressure	Diameter D	Adapter height f	Thread G	Height m	Height h	Max. diameter of the process isolating diaphragm d_M	Weight	Approval	Option [2]
	[in]	[bar]	[mm]	[mm]		[mm]	[mm]	[mm]	[kg (lbs)]		
AISI 316L	1	PN 25	54	3.5	Rd 40 – 1/6	20	42.5	24	0.25 (0.55)	3A, EHEDG	TG
	1 ½	PN 25	74	4	Rd 60 – 1/6	25	57	36	0.65 (1.43)	3A, EHEDG	TH [3]
	2	PN 25	84	4	Rd 70 – 1/6	26	62	48	1.05 (2.32)	3A, EHEDG	TI [3]

1) The roughness of the surfaces in contact with the medium is $R_a \leq 0.76$ µm (29.9 µin) as standard.

2) Product Configurator, "Process connection" ordering feature

3) With TempC diaphragm.

APV-RJT nozzles with slotted nut

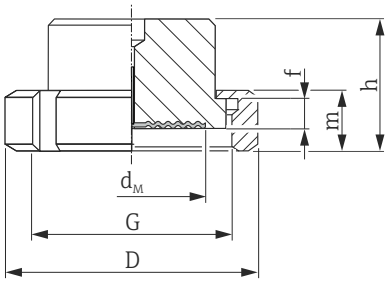

Engineering unit mm (in)

Material[1]	Nominal diameter	Nominal pressure PN	Diameter D	Adapter height f	Thread G	Height m	Height h	Max. diameter of the process isolating diaphragm d_M	Weight	Option [2]
	[in]	[bar]	[mm]	[mm]		[mm]	[mm]	[mm]	[kg (lbs)]	
AISI 316L	1	PN 40	77	6.5	1 13/16 – 1/8"	22	42.6	21	0.45 (0.99)	TL
	1 ½	PN 40	72	6.4	2 5/16 – 1/8"	22	42.6	28	0.75 (1.65)	TM
	2	PN 40	86	6.4	2 7/8 – 1/8"	22	42.6	38	1.2 (2.65)	TN

1) The roughness of the surfaces in contact with the medium is $R_a \leq 0.8$ µm (31.5 µin) as standard.

2) Product Configurator, "Process connection" ordering feature

APV-ISS nozzles with slotted nut

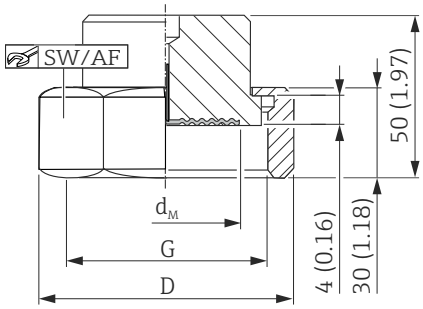

Engineering unit mm (in)

Material [1]	Nominal diameter	Nominal pressure	Diameter D	Thread G	Across flats AF	Max. diameter of the process isolating diaphragm d_M	Weight	Option [2]
	[in]	[bar]	[mm]			[mm]	[kg (lbs)]	
AISI 316L	1	PN 40	54.1	1 ½" – 1/8"	46.8	24	0.4 (0.88)	TP
	1 ½	PN 40	72	2" – 1/8"	62	34	0.6 (1.32)	TQ
	2	PN 40	89	2 ½" – 1/8"	77	45	1.1 (2.43)	TS

1) The roughness of the surfaces in contact with the medium is $R_a \leq 0.8$ µm (31.5 µin) as standard. Lower surface roughness on request.

2) Product Configurator, "Process connection" ordering feature

Hygienic process connections for PMP75 with flush-mounted process isolating diaphragm

Taper adapter with slotted nut, DIN 11851

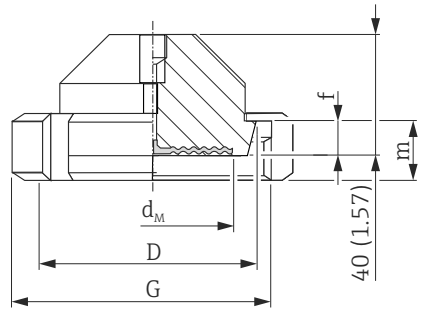

Engineering unit mm (in)

Material [1]	Taper adapter				Slotted nut		Diaphragm seal			Approval	Option [2]
	Nominal diameter	Nominal pressure	Diameter D	Adapter height f	Thread G	Height m	Max. diameter of the process isolating diaphragm standard	Max. diameter of the process isolating diaphragm with TempC diaphragm	Weight		
			[mm]	[mm]		[mm]	d_M [mm]	d_M [mm]	[kg (lbs)]		
AISI 316L	DN 40	PN 40	56	10	Rd 65 x 1/6"	21	38	36	0,45 (0.99)	3A, EHEDG	MZ [3]
	DN 50	PN 25	68.5	11	Rd 78 x 1/6"	19	52	48	1.1 (2.43)	3A, EHEDG	MR [4]
	DN 65	PN 25	86	12	Rd 95 x 1/6"	21	66	61	2.0 (4.41)	3A, EHEDG	MS [4]
	DN 80	PN 25	100	12	Rd 110 x 1/4"	26	81	61	2.55 (5.62)	3A, EHEDG	MT [4]

1) The roughness of the surfaces in contact with the medium is $R_a \leq 0.79$ µm (29.9 µin) as standard.

2) Product Configurator, "Process connection" ordering feature

3) With TempC diaphragm

4) Alternatively available with TempC diaphragm.

NEUMO BioControl

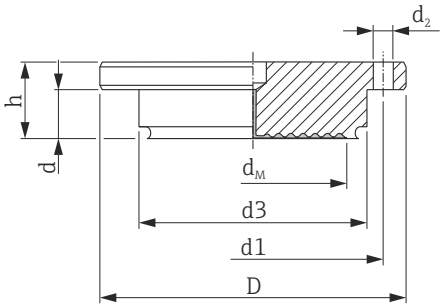

Engineering unit mm (in)

Material [1]	Threaded adapter							Diaphragm seal			Approval	Option [2]
	Nominal diameter	Nominal pressure	Diameter			Hole circle	Height	Max. diameter of the process isolating diaphr.		Weight		
			D	d_2	d_3	d_1	h	standard	with TempC diaphragm			
			[mm]	[mm]	[mm]	[mm]	[mm]	d_M [mm]	d_M [mm]	[kg (lbs)]		
AISI 316L	DN 50	PN 16	90	4 x ∅ 9	50	70	27	40	36	1.1 (2.43)	3A	S4 [3]
	DN 80	PN 16	140	4 x ∅ 11	87.4	115	37	61	61	2.6 (5.73)	3A	S6 [3]

1) The roughness of the surfaces in contact with the medium is R_a ≤0.76 µm (29.9 µin) as standard.

2) Product Configurator, "Process connection" ordering feature

3) With TempC diaphragm

Universal process adapter

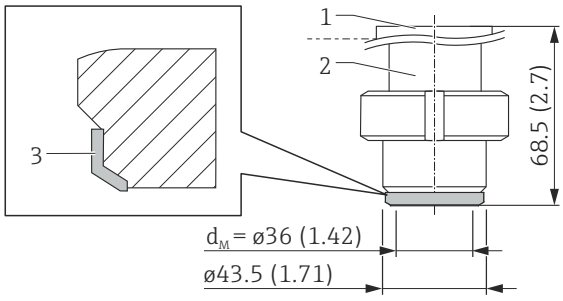

Engineering unit mm (in)

Designation	Material [1]	Weight kg (lbs)	Approval	Option [2]
Universal process adapter with pre-installed silicone molded seal (item 3) (spare part no.: 52023572) FDA 21CFR177.2600/USP Class VI-70C	▪ Item 1: Top section AISI 316L (1.4404) ▪ Item 2: Bottom section AISI 316L (1.4435)	0.8 (1.76)	3A, EHEDG	00 [3] [4]

1) The roughness of the surfaces in contact with the medium is R_a ≤0.76 µm (29.9 µin) as standard. Surface quality R_a<0.38 µm electropolished (wetted), ordering information: product configurator "Additional option 2" sextion, option "P".

2) Product Configurator, "Process connection" ordering feature

3) Endress+Hauser supplies these slotted nuts in stainless steel AISI 304 (DIN/EN material number 1.4301) or in AISI 304L (DIN/EN material number 1.4307).

4) Alternatively available with TempC diaphragm.

Process connections for PMP75 with flush-mounted process isolating diaphragm

EN/DIN flanges, connection dimensions as per EN 1092-1/DIN 2527 and DIN 2501-1

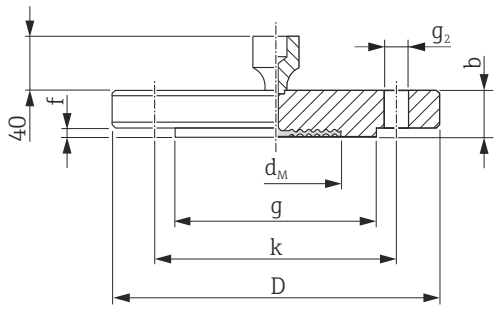

Engineering unit mm

Material	Flange [1) 2)]							Boltholes			Diaphragm seal		Option [3)]
	Nominal diameter	Nominal pressure	Shape [4)]	Dia meter D	Thick ness b	Raised face g	Raised face f	Quantity	Dia meter g_2	Hole circle k	Max. diameter of the process isolating diaphragm d_M	Weight	
				[mm]	[mm]	[mm]	[mm]		[mm]	[mm]	[mm]	[kg (lbs)]	
AISI 316L	DN 25	PN 10-40	B1 (D)	115	18	68	3	4	14	85	32	2.1 (4.63)	CN
	DN 25	PN 63-160	B2 (E)	140	24	68	2	4	18	100	28	2.5 (5.51)	DN
	DN 25	PN 250	B2 (E)	150	28	68	2	4	22	105	28	3.7 (8.16)	EN
	DN 25	PN 400	B2 (E)	180	38	68	2	4	26	130	28	7.0 (15.44)	E1
	DN 32	PN 10-40	B1 (D)	140	18	77	2.6	4	18	100	34	1.9 (4.19)	CP
	DN 40	PN 10-40	B1 (D)	150	18	87	2.6	4	18	110	48	2.2 (4.85)	CQ
	DN 50	PN 10-40	B1 (D)	165	20	102	3	4	18	125	59	3.0 (6.62)	B3
	DN 50	PN 63	B2 (E)	180	26	102	3	4	22	135	59	4.6 (10.14)	C3
	DN 50	PN 100-160	B2 (E)	195	30	102	3	4	26	145	59	6.2 (13.67)	EF
	DN 50	PN 250	B2 (E)	200	38	102	3	8	26	150	59	7.7 (16.98)	ER
	DN 50	PN 400	B2 (E)	235	52	102	3	8	30	180	59	14.7 (32.41)	E3
	DN 80	PN 10-40	B1 (D)	200	24	138	3.5	8	18	160	89	5.3 (11.69)	B4
	DN 80	PN 100	B2 (E)	230	32	138	4	8	24	180	89	8.9 (19.62)	C4
	DN 100	PN 100	B2 (E)	265	36	175	5	8	30	210	89	13.7 (30.21)	C5

1) The roughness of the surface in contact with the media, including the raised face of the flanges (all standards) made of Alloy C, Monel or tantalum, is Ra <0.8 µm (31.5 µin). Lower surface roughness on request.

2) In the case of process isolating diaphragms made of Alloy C, Monel or tantalum, the flange raised face is made of the same material as the process isolating diaphragm.

3) Product Configurator, "Process connection" ordering feature

4) Designation as per DIN 2527 in brackets

EN/DIN flanges with extended diaphragm seal, connection dimensions as per EN 1092-1/ DIN 2527 and DIN 2501-1

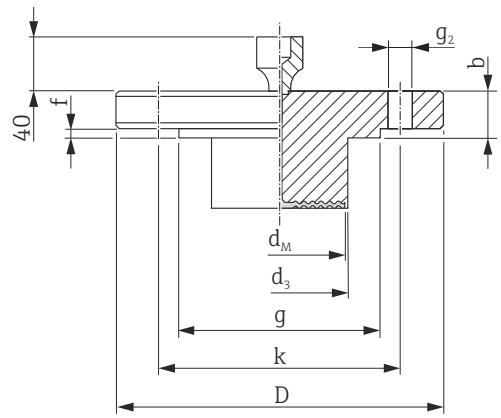

Engineering unit mm

Material	Flange [1]							Boltholes			Diaphragm seal		Option [2]
	Nominal diameter	Nominal pressure	Shape [3]	Diameter D	Thickness b	Raised face g	Raised face f	Quantity	Diameter g_2	Hole circle k	Max. diameter of the process isolating diaphragm d_M	Weight	
				[mm]	[mm]	[mm]	[mm]		[mm]	[mm]	[mm]	[kg (lbs)]	
AISI 316L	DN 50	PN 10-40	B1 (D)	165	20	102	3	4	18	125	47	[4]	D3 [4]
	DN 80	PN 10-40	B1 (D)	200	24	138	3.5	8	18	160	72	[4]	D4 [4]

1) The roughness of the surface in contact with the media, including the raised face of the flanges (all standards) made of Alloy C, Monel or tantalum, is Ra <0.8 µm (31.5 µin). Lower surface roughness on request.

2) Product Configurator, "Process connection" ordering feature

3) Designation as per DIN 2527 in brackets

4) Available with 50 mm (1.97 in), 100 mm (3.94 in) and 200 mm (7.87 in) extended diaphragm seal, for extended diaphragm seal diameter and weight see the following table

Option [1]	Nominal diameter	Nominal pressure	Extended diaphragm seal length (L)	Extended diaphragm seal diameter d_3	Weight
			[mm]	[mm]	[kg (lbs)]
D3	DN 50	PN 10-40	50 / 100 / 200	48.3	3.2 (7.1)/ 3.8 (8.4)/ 4.4 (9.7)
D4	DN 80	PN 10-40	50 /100 / 200	76	6.2 (13.7)/ 6.7 (14.8)/ 7.8 (17.2)

1) Product Configurator, "Process connection" ordering feature

Process connections for PMP75 with flush-mounted process isolating diaphragm

ASME flanges, connection dimensions as per ASME B 16.5, raised face RF

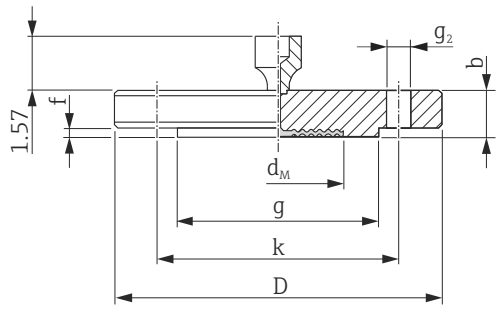

Engineering unit in

Flange [1] [2] [3]						Boltholes			Diaphragm seal		Approval [4]	Option [5]
Nominal diameter	Class	Dia meter D	Thickness b	Raised face g	Raised face f	Quantity	Dia meter g_2	Hole circle k	Max. diameter of the process isolating diaphragm d_M	Weight		
[in]	[lb./sq.in]	[in]	[in]	[in]	[in]		[in]	[in]	[in]	[kg (lbs)]		
1	150	4.25	0.56	2	0.08	4	0.62	3.12	1.26	1.2 (2.65)	CRN	AC
1	300	4.88	0.69	2	0.08	4	0.75	3.5	1.26	1.3 (2.87)	CRN	AN
1	400/600	4.88	0.69	2	0.25	4	0.75	3.5	1.26	1.4 (3.09)	CRN	HC
1	900/1500	5.88	1.12	2	0.25	4	1	4	1.26	3.2 (7.06)	CRN	HN
1	2500	6.25	1.38	2	0.25	4	1	4.25	1.26	4.6 (10.14)	CRN	HO
1 ½	150	5	0.69	2.88	0.06	4	0.62	3.88	1.89	1.5 (3.31)	CRN	AE
1 ½	300	6.12	0.81	2.88	0.06	4	0.88	4.5	1.89	2.6 (5.73)	CRN	AQ
2	150	6	0.75	3.62	0.06	4	0.75	4.75	2.32	2.2 (4.85)	CRN	AF
2	300	6.5	0.88	3.62	0.06	8	0.75	5	2.32	3.4 (7.5)	CRN	AR
2	400/600	6.5	1	3.62	0.25	8	0.75	5	2.32	4.3 (9.48)	CRN	HF
2	900/1500	8.5	1.5	3.62	0.25	8	1	6.5	2.32	10.3 (22.71)	CRN	HR
2	2500	9.25	2	3.62	0.25	8	1.12	6.75	2.32	15.8 (34.84)	-	H3
3	150	7.5	0.94	5	0.06	4	0.75	6	3.50	5.1 (11.25)	CRN	AG
3	300	8.25	1.12	5	0.06	8	0.75	6	3.50	7.0 (15.44)	CRN	AS
4	150	9	0.94	6.19	0.06	8	0.75	7.5	3.50	7.2 (15.88)	CRN	AH
4	300	10	1.25	6.19	0.06	8	0.88	7.88	3.50	11.7 (25.8)	CRN	AT

1) Material AISI 316/316L: Combination of AISI 316 for required pressure resistance and AISI 316L for required chemical resistance (dual rated)

2) The roughness of the surface in contact with the media, including the raised face of the flanges (all standards) made of Alloy C, Monel or tantalum, is Ra <0.8 µm (31.5 µin). Lower surface roughness on request.

3) In the case of process isolating diaphragms made of Alloy C, Monel or tantalum, the flange raised face is made of the same material as the process isolating diaphragm.

4) CSA approval: Product Configurator, "Approval" ordering feature

5) Product Configurator, "Process connection" ordering feature

Some device versions have CRN approval. For a CRN-approved device, a CRN-approved process connection must be ordered with a CSA approval. These devices are fitted with a separate plate bearing the registration number 0F10525.5C.

ASME flanges with extended diaphragm seal, connection dimensions as per ASME B 16.5, raised face RF

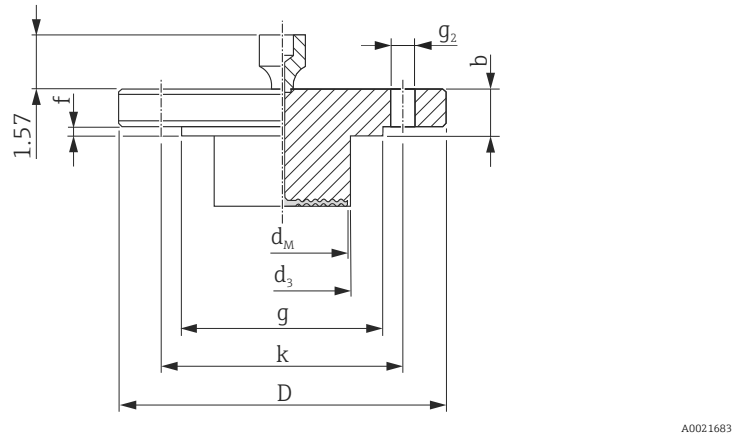

Engineering unit in

Material [1]	Flange [2]						Boltholes			Diaphragm seal		Approval [3]	Option [4]
	Nominal diameter	Class	Dia meter D	Thick ness b	Raised face g	Raised face f	Quan tity	Dia meter g_2	Hole circle k	Max. diameter of the process isolating diaphragm d_M	Weight		
	[in]	[lb./sq.in]	[in]	[in]	[in]	[in]		[in]	[in]	[in]	[kg (lbs)]		
AISI 316/ 316L	2	150	6	0.75	3.62	0.06	4	0.75	4.75	1.85	[5]	CRN	J3 [5]
	3	150	7.5	0.94	5	0.06	4	0.75	6	2.83	[5]	CRN	J4 [5]
	3	300	8.25	1.12	5	0.06	8	0.88	6.62	2.83	[5]	CRN	J7 [5]
	4	150	9	0.94	6.19	0.06	8	0.75	7.5	3.50	[5]	CRN	J5 [5]
	4	300	10	1.25	6.19	0.06	8	0.88	7.88	3.50	[5]	CRN	J8 [5]

1) Combination of AISI 316 for required pressure resistance and AISI 316L for required chemical resistance (dual rated)

2) The roughness of the surface in contact with the media, including the raised face of the flanges (all standards) made of Alloy C, Monel or tantalum, is Ra 0.8 µm (31.5 µin). Lower surface roughness on request.

3) CSA approval: Product Configurator, "Approval" ordering feature

4) Product Configurator, "Process connection" ordering feature

5) Available with 2", 4", 6" or 8" extended diaphragm seal, for extended diaphragm seal diameter and weight see the following table

Some device versions have CRN approval. For a CRN-approved device, a CRN-approved process connection must be ordered with a CSA approval. These devices are fitted with a separate plate bearing the registration number 0F10525.5C.

Option [1]	Nominal diameter	Class	Extended diaphragm seal length (L)	Extended diaphragm seal diameter d_3	Weight
	[in]	[lb./sq.in]	in (mm)	in (mm)	[kg (lbs)]
J3	2	150	2 (50.8) / 4 (101.6) / 6 (152.4) / 8 (203.2)	1.9 (48.3)	3.0 (6.6)/ 3.4 (7.5)/ 3.9 (8.6)/ 4.4 (9.7)
J4	3	150	2 (50.8) / 4 (101.6) / 6 (152.4) / 8 (203.2)	2.99 (76)	6.0 (13.2) / 6.6 (14.5) / 7.1 (15.7) / 7.8 (17.2)
J7	3	300	2 (50.8) / 4 (101.6) / 6 (152.4) / 8 (203.2)	2.99 (76)	7.9 (17.4) / 8.5 (18.7) / 9.0 (19.9) / 9.6 (21.2)
J5	4	150	2 (50.8) / 4 (101.6) / 6 (152.4) / 8 (203.2)	3.7 (94)	8.6 (19) / 9.9 (21.8) / 11.2 (24.7) / 12.4 (27.3)
J8	4	300	2 (50.8) / 4 (101.6) / 6 (152.4) / 8 (203.2)	3.7 (94)	13.1 (28.9)/ 14.4 (31.6)/ 15.7 (34.6)/ 16.9 (37.3)

1) Product Configurator, "Process connection" ordering feature

JIS flanges, connection dimensions as per JIS B 2220 BL, raised face RF

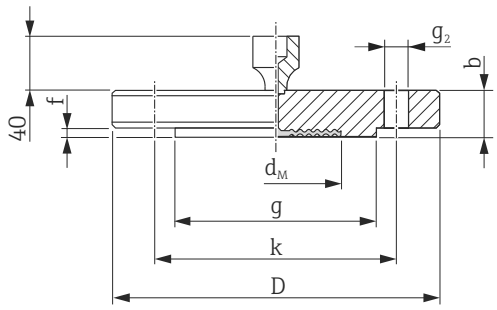

Engineering unit mm

Material	Flange 1) 2)						Boltholes			Diaphragm seal		Option 3)
	Nominal diameter	Nominal pressure	Dia meter D	Thickness b	Diameter of raised face g	Raised face height f	Quantity	Dia meter g_2	Hole circle k	Max. diameter of process isolating diaphragm d_M	Weight	
			[mm]	[mm]	[mm]	[mm]		[mm]	[mm]	[mm]	[kg (lbs)]	
AISI 316L	25 A	10 K	125	14	67	1	4	19	90	32	1.5 (3.31)	KC
	50 A	10 K	155	16	96	2	4	19	120	59	2.3 (5.07)	KF
	80 A	10 K	185	18	127	2	8	19	150	89	3.3 (7.28)	KL
	100 A	10 K	210	18	151	2	8	19	175	89	4.4 (9.7)	KH

1) The roughness of the surface in contact with the media, including the raised face of the flanges (all standards) made of Alloy C, Monel or tantalum, is Ra 0.8 µm (31.5 µin). Lower surface roughness on request.

2) In the case of process isolating diaphragms made of Alloy C, Monel or tantalum, the flange raised face is made of the same material as the process isolating diaphragm.

3) Product Configurator, "Process connection" ordering feature

Process connections for PMP75 with flush-mounted process isolating diaphragm

Thread ½ NPT and 1 NPT, separator

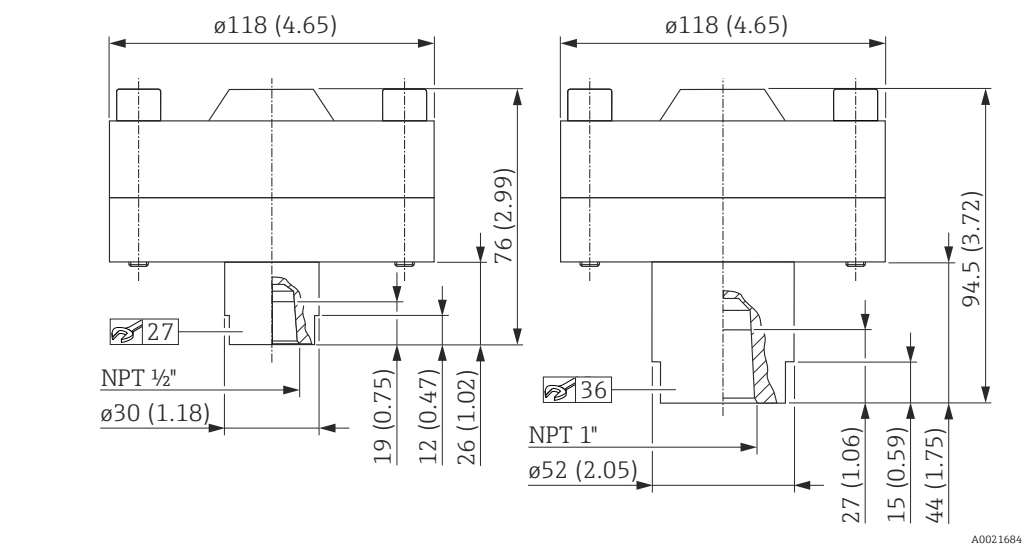

Engineering unit mm (in)

Material	Designation	Measuring range [bar (psi)]	Nominal pressure	Weight [kg (lbs)]	Option [1]
AISI 316L	Threaded, ½" NPT with Viton seal	≤ 250 (3625)	PN 250	4.75 (10.47)	UG
	Threaded, 1" NPT with Viton seal		PN 250	5.0 (11.03)	UH

1) Product Configurator, "Process connection" ordering feature

Thread ISO 228 G ½ A and ANSI ½ MNPT, separator

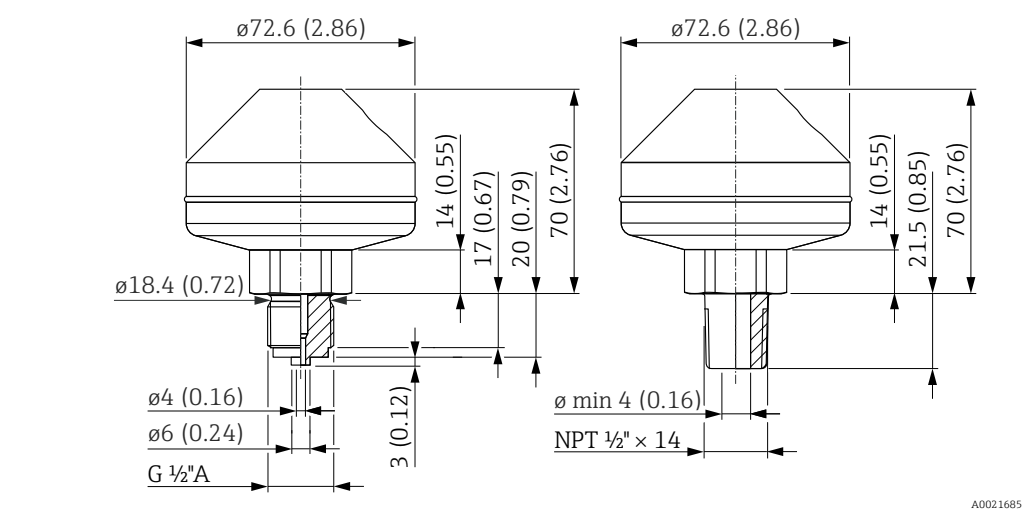

Engineering unit mm (in)

Material	Designation	Measuring range [bar (psi)]	Nominal pressure	Approval	Weight [kg (lbs)]	Option [1]
AISI 316L	Welded, ISO 228 G ½ A EN837	≤ 250 (3625)	PN 160	-	1.43 (3.15)	UA
	Welded, ANSI ½ MNPT		PN 160	CRN [2]		UB

1) Product Configurator, "Process connection" ordering feature

2) CSA approval: Product Configurator, "Approval" ordering feature

Some device versions have CRN approval. For a CRN-approved device, a CRN-approved process connection must be ordered with a CSA approval. These devices are fitted with a separate plate bearing the registration number 0F10525.5C.

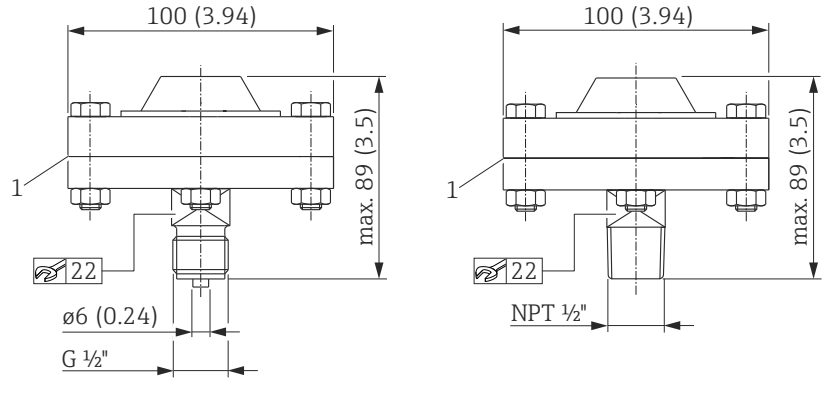

Left "UC" Option with threaded connection ISO 228 G ½ B, right "UD" Option with threaded connection ANSI ½ MNPT

1 PTFE seal as standard max. 260 °C (500 °F) (higher temperatures on request)

Engineering unit mm (in)

Material	Designation	Measuring range [bar (psi)]	Nominal pressure	Weight [kg (lbs)]	Option [1]
AISI 316L (1.4404), screws made of 1.4571	ISO 228 G ½ B EN837	≤ 40 bar	PN 40	1.43 (3.15)	UC
	ANSI ½ MNPT	≤ 40 bar	PN 40		UD

1) Product Configurator, "Process connection" ordering feature

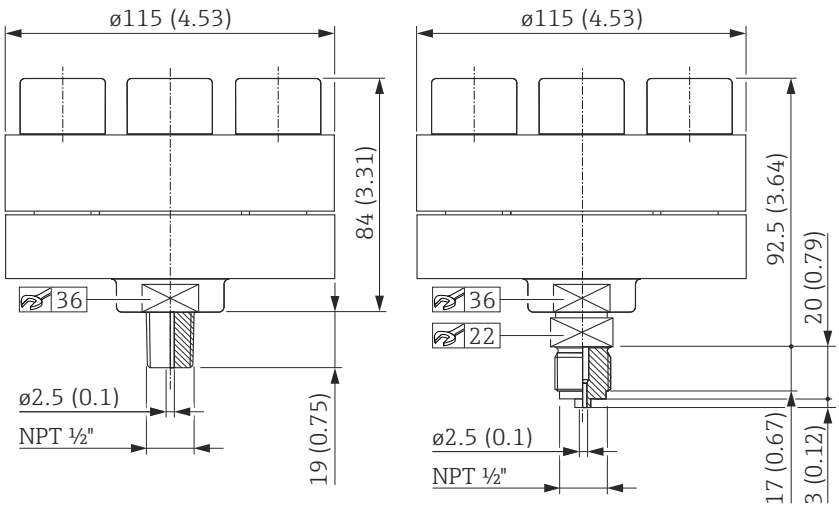

Engineering unit mm (in)

Material	Designation	Measuring range [bar (psi)]	Nominal pressure	Weight [kg (lbs)]	Option [1]
AISI 316L (1.4404), screws made of 1.4571	Threaded, ISO 228 G ½ B EN837, with integrated seal lip	> 40 bar	PN 400	4.75 (10.47)	UC
	Threaded, ANSI ½ MNPT, with integrated seal lip	> 40 bar	PN 400		UD

1) Product Configurator, "Process connection" ordering feature

Separate housing: wall and pipe mounting with mounting bracket

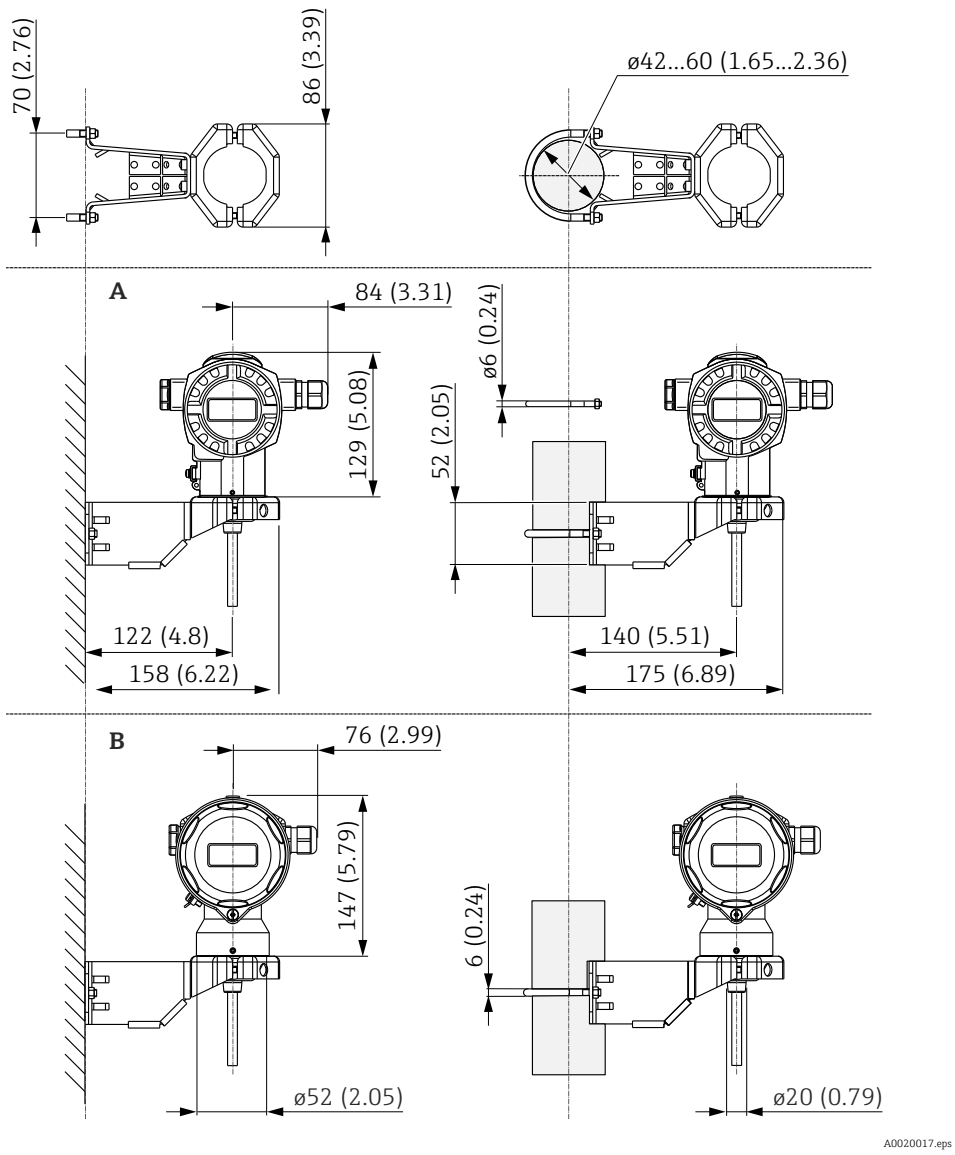

Engineering unit mm (in)

Position	Designation	Weight (kg (lbs)		Option [1]
		Housing (T14 or T17)	Mounting bracket	
A	Dimensions with T14 housing, optional display on the side	→ 📄 43 ff	0.5 (1.10)	U
B	Dimensions with T17 housing, optional display on the side			

1) Product Configurator, "Additional options" ordering feature, option "G".

Can also be ordered as a separate accessory (part no.: 71102216).

Materials not in contact with process

Housing

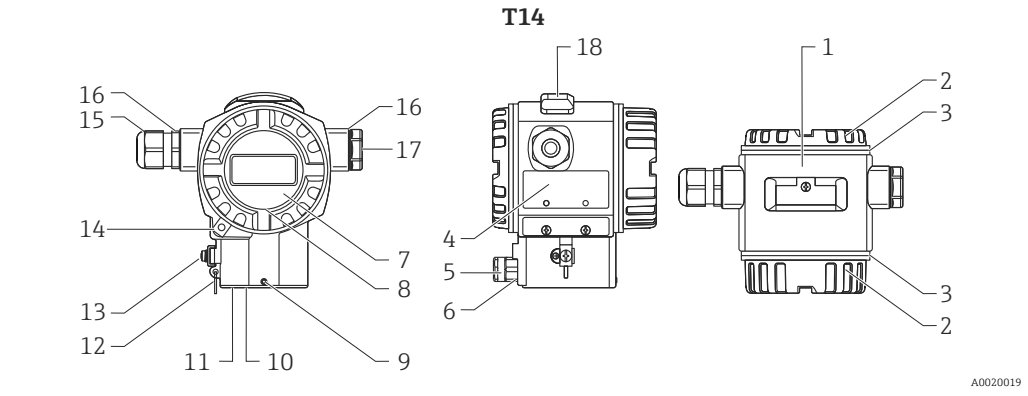

Item number	Component part	Material
1	T14 housing, RAL 5012 (blue)	▪ Die-cast aluminum with protective powder-coating on polyester base ▪ Coating on thread: heat-curing lubricant varnish
	T14 housing	▪ Precision casting AISI 316L (1.4435) ▪ Coating on thread: heat-curing lubricant varnish
2	Cover, RAL 7035 (gray)	Die-cast aluminum with protective powder-coating on polyester base
3	Cover seal	EPDM
4	Nameplates	AISI 316L (1.4404)
5	Pressure compensation filter	AISI 316L (1.4404) and PBT-FR
6	Pressure compensation filter, O-ring	VMQ or EPDM
7	Sight glass	Mineral glass
8	Sight glass seal	Silicone (VMQ)
9	Screw	A4
10	Sealing ring	EPDM
11	Snap ring	PA66-GF25
12	Snap ring for nameplates	AISI 304 (1.4301)/ AISI 316 (1.4401)
13	External ground terminal	AISI 304 (1.4301)
14	Cover clamp	Clamp AISI 316L (1.4435), screw A4
15	Cable entry	Polyamide (PA) or CuZn nickel-plated
16	Seal of cable entry and blind plug	Silicone (VMQ)
17	Blind plug	PBT-GF30 FR, for dust ignition-proof: AISI 316L (1.4435)
18	External operation (keys and key cover), RAL 7035 (gray)	Polycarbonate PC-FR, screw A4
	Devices with MID parts certificate	
	Seal wire	DIN 1367-0 St/Zn (soft galvanized steel)
	Seals	Pb (lead)

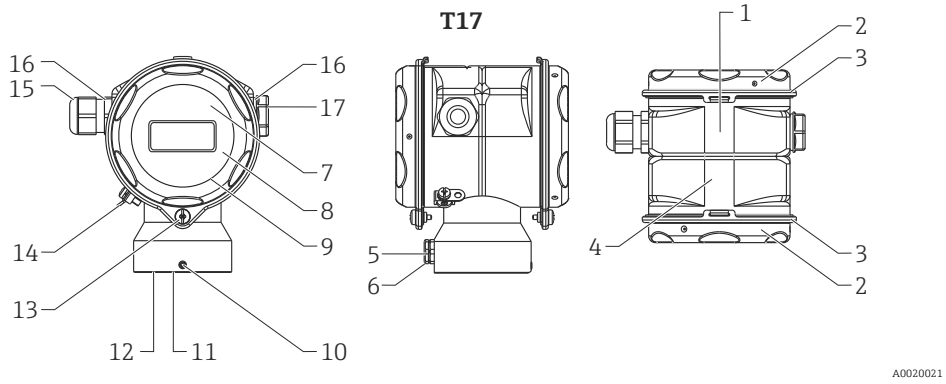

Front view, left-hand side view, top view

Item number	Component part	Material
1	T17 housing	AISI 316L (1.4404)
2	Cover	
3	Cover seal	EPDM
4	Nameplates	Lasered
5	Pressure compensation filter	AISI 316L (1.4404) and PBT-FR
6	Pressure compensation filter, O-ring	VMQ or EPDM
7	Sight glass for non-hazardous area, ATEX Ex ia, NEPSI Zone 0/1 Ex ia, IECEx Zone 0/1 Ex ia, FM NI, FM IS, CSA IS	Polycarbonate (PC)
8	Sight glass for ATEX 1/2 D, ATEX 1/3 D, ATEX 1 GD, ATEX 1/2 GD, ATEX 3 G, FM DIP, CSA dust ignition-proof	Mineral glass
9	Sight glass seal	EPDM
10	Screw	A2-70
11	Sealing ring	EPDM
12	Snap ring	PA6
13	Screw	A4-50
14	External ground terminal	AISI 304 (1.4301)
15	Cable entry	Polyamide PA, for dust ignition-proof: CuZn nickel-plated
16	Seal of cable entry and blind plug	Silicone (VMQ)
17	Blind plug	PBT-GF30 FR, for dust ignition-proof: AISI 316L (1.4435)
	Devices with MID parts certificate	
	Seal wire	DIN 1367-0 St/Zn (soft galvanized steel)
	Seals	Pb (lead)

Connecting parts

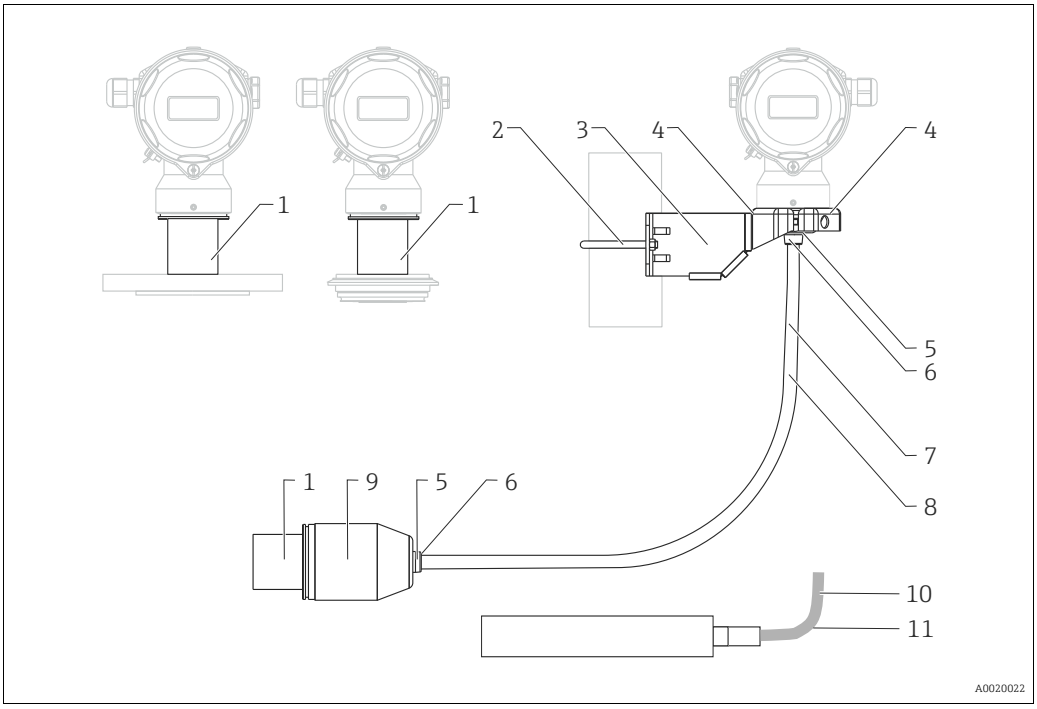

Item number	Component part	Material
1	Connection between the housing and process connection	AISI 316L (1.4404)
2	Mounting bracket	Bracket AISI 316L (1.4404)
3		Screw and nuts A4-70
4		Half-shells: AISI 316L (1.4404)
5	Seal for cable from separate housing	EPDM
6	Gland for cable from separate housing	AISI 316L (1.4404)
7	PE cable for separate housing	abrasion-proof cable with strain-relief Dynema members; shielded using aluminum-coated foil; insulated with polyethylene (PE-LD), black; copper wires, twisted, UV-resistant
8	FEP cable for separate housing	abrasion-proof cable; shielded using galvanized steel wire netting; insulated with fluorinated ethylene propylene (FEP), black; copper wires, twisted, UV-resistant
9	Process connection adapter for separate housing	AISI 316L (1.4404)
10	Capillary	AISI 316 Ti (1.4571)
11	Protective hose for capillary	AISI 304 (1.4301)

PMP71 fill fluid

Designation	Option [1]
Silicone oil	A
Inert oil	F
Inert oil, cleaned from oil and grease	K
Inert oil, cleaned for oxygen service (observe application limits pressure/temperature)	N

1) Product Configurator, "Fill fluid" ordering feature

PMP75 fill fluid

Designation	Option [1]
Silicone oil	A
...m capillary, inert oil	B
...ft capillary, inert oil	C
Vegetable oil	D
Inert oil	F
High-temperature oil, temp. isolator 100 mm (3.94 in)	G
Silicone oil, temp. isolator 100 mm (3.94 in)	H
Inert oil, cleaned from oil and grease	K
Inert oil, cleaned for oxygen service	N
...m capillary, silicone oil	1
...ft capillary, silicone oil	2
...m capillary, high-temperature oil	3
...ft capillary, high-temperature oil	4
...m capillary, vegetable oil	5
...ft capillary, vegetable oil	6
...m capillary, low-temperature oil	7
...ft capillary, low-temperature oil	8

1) Product Configurator, "Fill fluid" ordering feature

Miscellaneous:

- Diaphragm seal capillary: AISI 316 Ti (1.4571)
- Protective hose for diaphragm seal capillary: AISI 304 (1.4301)

Materials in contact with process

Process-wetted device components are listed in the "Mechanical construction" (→ 43 ff) section.

TSE Certificate of Suitability (Transmissible Spongiform Encephalopathy)

The following applies to all process wetted device components:
- They do not contain any materials derived from animals.
- No additives or operating materials derived from animals are used in production or processing.

Process connections

- "Clamp connections" and "Hygienic connections" (see also "Ordering information" section): AISI 316L (DIN/EN material number 1.4435)

- Endress+Hauser supplies process connections with threaded connections and DIN/ EN flanges made of stainless steel as per AISI 316L (DIN/EN material number 1.4404 (AISI 316) or 14435). With regard to their stability-temperature property, the materials 1.4404 and 1.4435 are grouped together under 13E0 in EN 1092-1: 2001 Tab. 18. The chemical composition of the two materials can be identical.
- Some process connections are also available in the material Alloy C276 (DIN/EN material number 2.4819). For this purpose see the information in the "Mechanical construction" section.

Process isolating diaphragm

Device	Designation	Option [1]
PMC71	Al_2O_3 aluminum oxide ceramic (FDA 21CFR186.1256, USP Class VI), ultrapure 99.9 % (see also www.endress.com/ceraphire)	standard
PMP71	AISI 316L (DIN/EN material number 1.4435)	1
	AISI 316L with gold-rhodium coating	6
	Alloy C276 (DIN/EN material number 2.4819)	2
PMP75	AISI 316L (DIN/EN material number 1.4435)	1
	AISI 316L, TempC	E
	AISI 316L with gold-rhodium coating	6
	AISI 316L with 0.25 mm (0.01 in) PTFE foil (not for vacuum applications)	8
	Alloy C276 (DIN/EN material number 2.4819)	2 [2]
	Monel	3 [2]
	Tantalum	5 [2]

1) Product Configurator "Material of process isolating diaphragm" ordering feature

2) The material of the flange raised face is made of the same material as the process isolating diaphragm.

Seals

Device	Designation	Option [1]
PMC71	FKM Viton	A
	FKM Viton, FDA	G
	EPDM	B
	Kalrez	D
	Chemraz	E
	NBR (FDA)/3A: HNBR (FDA)	F
	FKM Viton, cleaned for silicone-free applications	L
	Kalrez, cleaned for silicone-free applications	M
	FKM Viton, cleaned from oil and grease	1
	FKM Viton, cleaned for oxygen service, note application limits pressure/temp.	2

1) Product Configurator, "Seal" ordering feature.

Operability

Operating concept

Operator-oriented menu structure for user-specific tasks

- Commissioning
- Operation
- Diagnosis

Quick and safe commissioning

Guided menus for applications

Reliable operation

- Local operation possible in several languages
- Standardized operation at the device and in the operating tools
- Parameters relating to measured values can be locked/unlocked using the device's write protection switch, using the device software or via remote control

Efficient diagnostics increase measurement availability

- Remedial measures are integrated in plain text
- Diverse simulation options

Local operation

Function	External operation (operating keys, optional, not T17 housing)	Internal operation (electronic insert)	Display (optional)
Position adjustment (zero point correction)	✔	✔	✔
Setting lower-range value and upper-range value - reference pressure present at the device	✔ (HART only)	✔ (HART only)	✔
Device reset	✔	✔	✔
Locking and unlocking parameters relevant to the measured value	–	✔	✔
Value acceptance indicated by green LED	✔	✔	✔
Switching damping on and off	–	✔ (HART and PA only)	✔
Configuring bus address (PA)	–	✔	✔
Switching simulation mode on and off (FOUNDATION Fieldbus)	–	✔	✔

Operating the device using onsite display (optional)

A 4-line liquid crystal display (LCD) is used for display and operation. The onsite display shows measured values, dialog text as well as fault and notice messages in plain text, thereby supporting the user in every stage of operation. The display of the device can be turned in 90° steps.
Depending on the installation position of the device, this makes it easy to operate the device and read the measured value.

Functions:
- 8-digit measured value display including sign and decimal point, bar graph for
  - 4 to 20 mA HART as current display
  - PROFIBUS PA as graphic display of the standardized value of the AI Block
  - FOUNDATION Fieldbus as graphic display of the transducer output.

- Simple and complete menu guidance thanks to separation of the parameters into several levels and groups.
- Menu guidance in up to 8 languages
- Each parameter is given a 3-digit ID number for easy navigation.
- Option for configuring the display according to individual requirements and preferences, such as language, alternating display, display of other measured values such as sensor temperature, contrast setting.
- Comprehensive diagnostic functions (fault and warning message, peak-hold indicators, etc.).
- Rapid and safe commissioning with the Quick Setup menus.

Overview

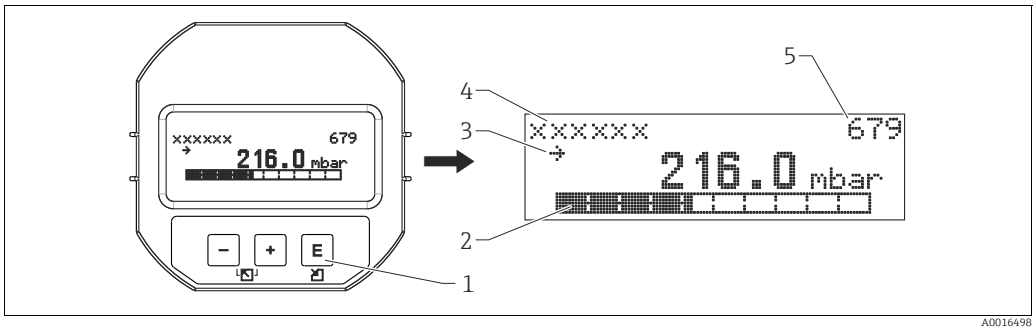

A0016498

1 Operating keys
2 Bar graph
3 Symbol
4 Header line
5 Parameter identification number

Ordering information:
Product Configurator, "Output, Operation" ordering feature

Operating keys on the exterior of the device

With the aluminum housing (T14), the operating keys are located either outside on the housing, under the protection cap or inside on the electronic insert. With the T17 housing (stainless steel), the operating keys are located inside the housing on the electronic insert.

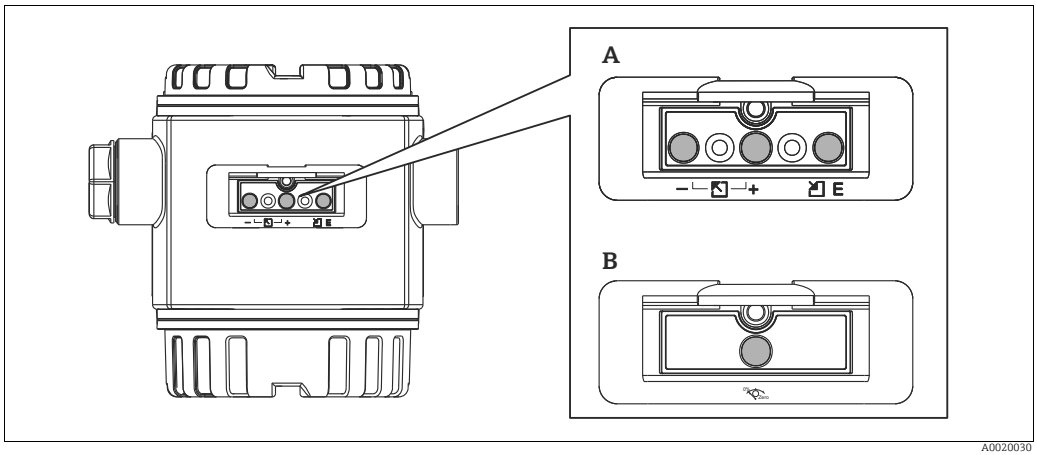

A0020030

A 4 to 20 mA HART
B PROFIBUS PA and FOUNDATION Fieldbus

The operating keys located externally on the device work on the Hall sensor principle. As a result, no additional openings are required in the device. This guarantees:
- Complete protection against environmental influences such as moisture and contamination.
- Simple operation without any tools.
- No wear.

Ordering information:
Product Configurator, "Output, Operation" ordering feature

Operating keys and elements located internally on the electronic insert

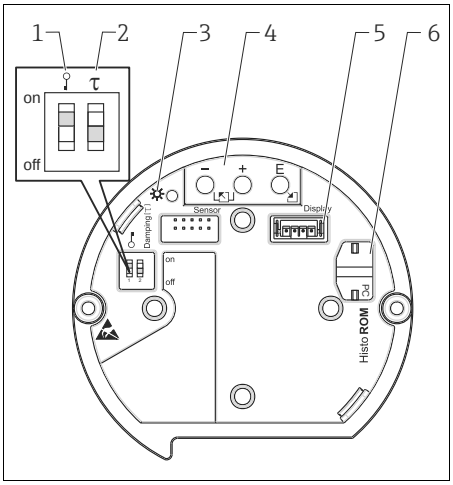

Electronic insert HART

1 *DIP-switch for locking/unlocking parameters relevant to the measured values*
2 *DIP-switch for damping on/off*
3 *Green LED to indicate value being accepted*
4 *Operating keys*
5 *Slot for optional display*
6 *Slot for optional HistoROM®/M-DAT*

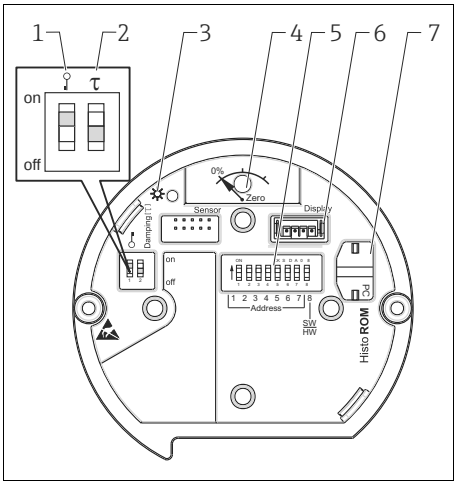

Electronic insert PROFIBUS PA

1 *DIP-switch for locking/unlocking parameters relevant to the measured values*
2 *DIP-switch for damping on/off*
3 *Green LED to indicate value being accepted*
4 *Key for position adjustment and device reset*
5 *DIP-switch for bus address*
6 *Slot for optional display*
7 *Slot for optional HistoROM®/M-DAT*

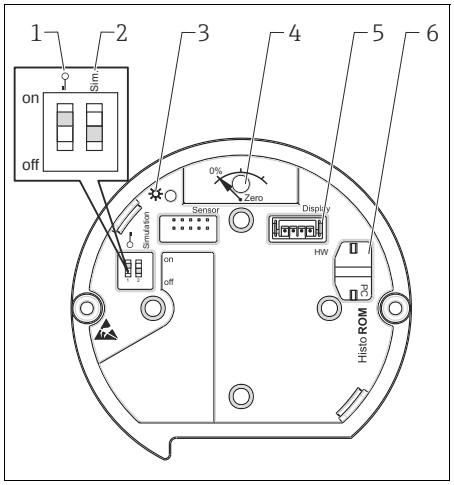

Electronic insert FOUNDATION Fieldbus

1 *DIP-switch for locking/unlocking parameters relevant to the measured values*
2 *DIP-switch for simulation mode on/off*
3 *Green LED to indicate value being accepted*
4 *Key for position adjustment and device reset*
5 *Slot for optional display*
6 *Slot for optional HistoROM®/M-DAT*

Ordering information:
Product Configurator, "Output, Operation" ordering feature

Remote operation

Depending on the position of the write protection switch on the device, all software parameters are accessible.

Hardware and software for remote operation	HART	PROFIBUS PA	FOUNDATION Fieldbus
FieldCar e→ 📄 92 ff	✔ 1)	✔ 2)	✔
FieldXpert SFX100 → 📄 93 ff	✔	–	✔
NI-FBUS Configurator → 📄 93 ff	–	–	✔
HistoROM®/M-DAT → 📄 94 ff	✔	✔	✔

1) Commubox FXA195 required → 📄 93 ff

2) Profiboard or Proficard required → 📄 93 ff

FieldCare

FieldCare is an Endress+Hauser asset management tool based on FDT technology. With FieldCare, you can configure all Endress+Hauser devices as well as devices from other manufacturers that support the FDT standard.

FieldCare supports the following functions:
- Configuration of transmitters in offline and online mode
- Loading and saving device data (upload/download)
- HistoROM®/M-DAT analysis
- Documentation of the measuring point

Connection options:
- HART via Commubox FXA195 and the USB port on a computer
- PROFIBUS PA via segment coupler and PROFIBUS interface card
- Service interface with Commubox FXA291 and ToF adapter FXA291 (USB).

For further information please contact your local Endress+Hauser Sales Center.

Field Xpert SFX100

Field Xpert is an industrial PDA with integrated 3.5" touchscreen from Endress+Hauser based on Windows Mobile. It offers wireless communication via the optional VIATOR Bluetooth modem or via WiFi and Endress+Hauser's Fieldgate FXA520. Field Xpert also works as a stand-alone device for asset management applications. For details, refer to BA00060S/04/EN.

Commubox FXA195

For intrinsically safe HART communication with FieldCare via the USB interface. For details refer to TI00404F/00/EN.

Commubox FXA291

The Commubox FXA291 connects Endress+Hauser field devices with a CDI interface (=Endress+Hauser Common Data Interface) to the USB interface of a personal computer or a notebook. For details refer to TI00405C/07/EN.

For the following Endress+Hauser devices you need the "ToF adapter FXA291" as an additional accessory:

- Cerabar S PMC71, PMP7x
- Deltabar S PMD7x, FMD7x
- Deltapilot S FMB70

ToF adapter FXA291

The ToF adapter FXA291 connects the Commubox FXA291 with devices of the ToF platform, pressure equipment and Gammapilot via the USB interface of a personal computer or a notebook. For details refer to KA00271F.

Profiboard

For connecting a PC to PROFIBUS.

Proficard

For connecting a laptop to PROFIBUS

FF configuration program

FF configuration program, such as NI-FBUS Configurator, to
- connect devices with "FOUNDATION Fieldbus signal" into an FF-network
- set FF-specific parameters

Remote operation via:
- Operation with NI-FBUS Configurator:
  The NI-FBUS Configurator is an easy-to-use graphical environment for creating linkages, loops, and a schedule based on the fieldbus concepts.
  You can use the NI-FBUS Configurator to configure a fieldbus network as follows:
  - Set block and device tags
  - Set device addresses
  - Create and edit function block control strategies (function block applications)
  - Configure vendor-defined function and transducer blocks
  - Create and edit schedules
  - Read and write to function block control strategies (function block applications)
  - Invoke Device Description (DD) methods
  - Display DD menus
  - Download a configuration
  - Verify a configuration and compare it to a saved configuration
  - Monitor a downloaded configuration
  - Replace a virtual device by a real device
  - Save and print a configuration

HistoROM®/M-DAT (optional)

HistoROM®/M-DAT is a memory module which can be attached to every electronic insert. The HistoROM®/M-DAT can be retrofitted at any stage (order number: 52027785).

Your benefits

- Quick and safe commissioning of the same measuring points by copying the configuration data of one transmitter to another transmitter.
- Reliable process monitoring thanks to cyclical recording of pressure and sensor temperature measured values.
- Simple diagnosis by recording diverse events such as alarms, configuration changes, counters for measuring range undershoot and overshoot for pressure and temperature as well as user limit overshoot and undershoot for pressure and temperature etc.
- Analysis and graphic evaluation of the events and process parameters via software (contained in scope of supply).

A CD with an Endress+Hauser operating program is also included in the scope of delivery.
You can copy data from one transmitter to another transmitter when operating a FOUNDATION Fieldbus device via an FF configuration program. You need the Endress+Hauser FieldCare operating program and the Commubox FXA291 service interface and the ToF adapter FXA291 to be able to access the data and events saved in the HistoROM®/M-DAT.

Ordering information:
Product Configurator, "Additional options:" ordering feature, option "N" or
Product Configurator, "Application Package:" ordering feature, option "EN" or
as a separate accessory (part no.: 52027785).

For further information please contact your local Endress+Hauser Sales Center.

System integration

The device can be given a tag name (max. 8 alphanumeric characters)

Designation	Option [1]
Tagging (TAG), see aditional spec.	Z1
Bus address, see aditional spec.	Z2

1) Product configurator "Marking" ordering feature

Planning instructions, diaphragm seal systems

NOTICE

Incorrect sizing/ordering of diaphragm seal systems

The performance and the permitted range of application of a diaphragm seal system depend on the process isolating diaphragm used, the filling oil, the coupling, the unit design and on the process and ambient conditions present in the individual application.

- To help you select the right diaphragm seal system for your applications, Endress+Hauser provides its customers with the free "Applicator Sizing Diaphragm Seal" tool, which is available on DVD or at "www.endress.com/applicator".

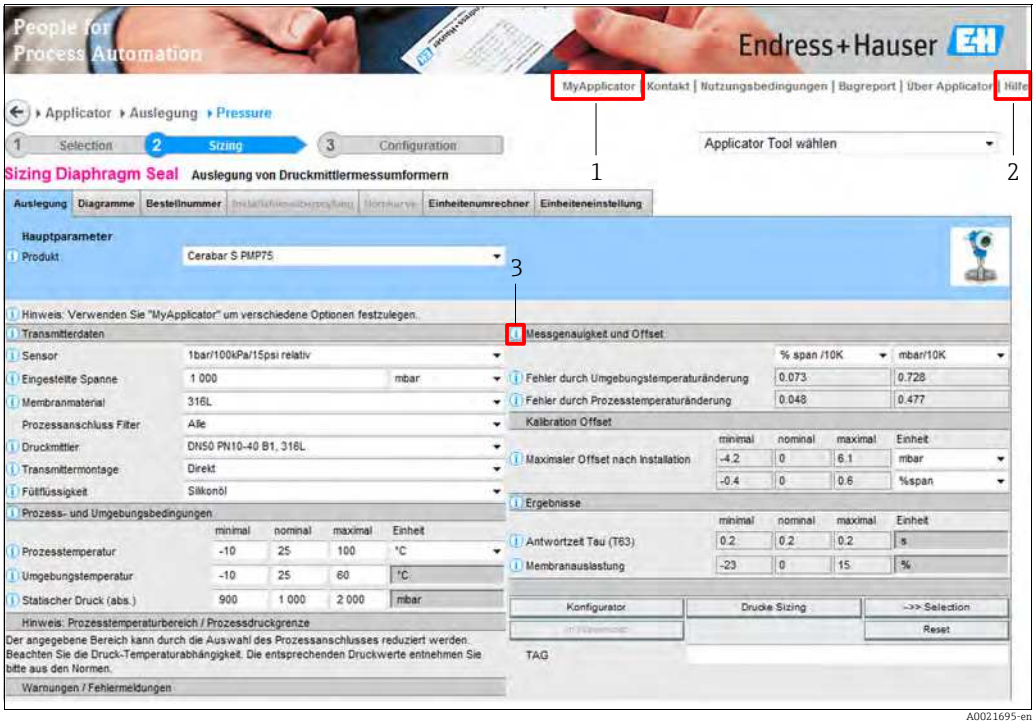

A0021695-en

1 *My Applicator - configuration of the Applicator settings*

2 *Applicator help*

3 *Mouse-over help - hover the cursor over these fields for brief information*

For more detailed information or the layout of the optimum diaphragm seal solution for your application, please contact your local Endress+Hauser Sales Center.

Applications

Diaphragm seal systems should be used if the process and the device should be separated. Diaphragm seal systems offer clear advantages in the following instances:

- In the case of extreme process temperatures
- For aggressive media
- In the case of process media that crystallize
- In the case of corrosive or highly various process media or process media with solids content
- In the case of heterogeneous and fibrous process media
- If extreme measuring point cleaning is necessary, or for very humid mounting locations
- If the measuring point is exposed to severe vibrations
- For mounting locations that are difficult to access

Design and operation mode

Diaphragm seals are separating equipment between the measuring system and the process.

A diaphragm seal system consists of:
- A diaphragm seal
- A capillary tube or temperature isolator if necessary
- Fill fluid
- A pressure transmitter

The process pressure acts via the process isolating diaphragm of a diaphragm seal on the liquid-filled system, which transfers the process pressure onto the sensor of the pressure transmitter. Endress+Hauser delivers all diaphragm seal systems as welded versions. The system is hermetically sealed, which ensures the highest reliability.

The diaphragm seal determines the application range of the system by:
- The process isolating diaphragm diameter
- The process isolating diaphragm stiffness and material
- The design (oil volume)

Diameter of the process isolating diaphragm

The greater the diameter of the process isolating diaphragm (less stiff), the smaller the temperature effect on the measurement result.

Process isolating diaphragm stiffness

The stiffness depends on the diameter of the process isolating diaphragm, the material, any existing coating and the thickness and shape of the process isolating diaphragm. The process isolating diaphragm thickness and the shape are determined by the design. The stiffness of a process isolating diaphragm of a diaphragm seal influences the temperature operating range and the measuring error caused by temperature effects.

The new TempC diaphragm: Highest accuracy and process safety in pressure and differential pressure measurement with diaphragm seals

To measure even more precisely in such applications and to increase process safety, Endress+Hauser has developed the TempC Membrane on basis of a completely novel technology. This membrane guarantees best in class accuracy and maximum process safety in diaphragm seal applications.
- The very low temperature effect minimizes the influence of fluctuations of both process and ambient temperatures thus guaranteeing accurate and stable measurements. Temperature-effects on the signal are reduced to a minimum.
- TempC Membrane may be used in the temperature range of -40°C (-40 °F) and 250°C (482 °F). This guarantees the highest degree of process safety also in tanks and pipes which are cleaned or sterilized (CIP/SIP) at high temperatures, even for very long cycles.
- Thanks to the TempC Membrane, smaller dimension process connections are possible. The new diaphragm detects with a smaller process connection at least as accurately as conventional diaphragms with a larger diameter.
- Fast membrane recovery aft er temperature shocks of the diaphragm permits shorter downtime in batch applications and thus a significantly higher availability of production facilities.
- In addition, TempC Membrane convinces customers by its better hygiene cleanability as well as insensitivity to strong pressure load changes.

Ordering information:
See the product configurator for the individual process connection and the choice of process isolating diaphragm.
Selection in the Applicator:
Under "Transmitter data" in the "Diaphragm material" field.

Capillary

Capillaries with an internal diameter of 1 mm (0.04 in) are used as standard.
The capillary tube influences the thermal change, the ambient temperature operating range and the response time of a diaphragm seal system as a result of its length and internal diameter.

Filling oil

When selecting the filling oil, the media and ambient temperature as well as the operating pressure are of crucial importance. Observe the temperatures and pressures during commissioning and cleaning. A further selection criterion is the compatibility of the filling oil with the requirements of the process media. For this reason, only filling oils that are harmless to health may be used in the food industry, such as vegetable oil or silicone oil (see also the following section on "diaphragm seal filling oils").
The filling oil used influences the thermal change, the temperature operating range of a diaphragm seal system and the response time. A temperature change results in a volume change of the filling oil. The volume change is dependent on the expansion coefficient and the volume of the filling oil at calibration temperature (constant in the range: +21 to +33 °C (+70 to 91 °F)). The application range can be extended by using a filling oil with a smaller expansion coefficient and a shorter capillary.
For example, the filling oil expands in the event of a temperature increase. The additional volume presses against the process isolating diaphragm of a diaphragm seal. The stiffer a diaphragm is, the greater its return force, which counteracts a volume change and acts on the measuring cell together with the operating pressure, thus shifting the zero point.

Pressure transmitter

The pressure transmitter influences the temperature operating range, the T_K zero point and the response time as a result of its volume change. The volume change is the volume that has to be shifted to pass through the complete measuring range.
Pressure transmitters from Endress+Hauser are optimized with regard to minimum volume change.

Diaphragm seal filling oils

Filling oil	Permissible temperature range [1] at 0.05 bar (0.725 psi) ≤ p_{abs} ≤ 1 bar (14.5 psi)	Permissible temperature range [1] at p_{abs} ≥ 1 bar (14.5 psi)	Density [g/cm³] / [SGU]	Viscosity [mm²/s] / [cSt] at 25 °C (77 °F)]	Coefficient of thermal expansion [1/K]	Notes	Option [2]
Silicone oil	−40 to +180°C (−40 to +356°F)	−40 to +250°C (−40 to +482 °F)	0.96	100	0.00096	Suitable for foods FDA 21 CFR 175.105	A, H, 1 or 2
High-temperature oil	−10 to +200°C (+14 to +392 °F)	−10 to +400°C (+14 to +752 °F)	1.07	37	0.0007	High temperatures	G, 3 or 4
Inert oil	−40 to +80°C (−40 to +176 °F)	−40 to +175°C (−40 to +347 °F)	1.87	27	0.000876	For ultrapure gas and oxygen applications	F or N
Vegetable oil	−10 to +120°C (+14 to +248 °F)	−10 to +200°C (+14 to +392 °F)	0.94	9.5	0.00101	Suitable for foods FDA 21 CFR 172.856	D, 5 or 6
Low-temperature oil	−70 to +80°C (−94 to +176 °F)	−70 to +180°C (−94 to +356 °F)	0.92	4.4	0.00108	Low temperatures	7 or 8

1) Observe temperature limits of the device (→ 41) and the system (→ 95).

2) Product Configurator, "Fill fluid" ordering feature

Cleaning instructions

- Endress+Hauser offer flushing rings as accessories to clean process isolating diaphragms without taking the transmitters out of the process.
  For further information please contact your local Endress+Hauser Sales Center.
- We recommend you perform CIP (cleaning in place (hot water)) before SIP (sterilization in place (steam)) for pipe diaphragm seals.
  A frequent use of sterilization in place (SIP) will increase the stress on the process isolating diaphragm. Under unfavorable circumstances in the long term view we cannot exclude that a frequent temperature change could lead to a material fatigue of the process isolating diaphragm and possibly to a leakage.

Installation instructions

Diaphragm seal systems

- The diaphragm seal together with the transmitter form a closed, calibrated system, which is filled through ports in the diaphragm seal and in the measuring system of the transmitter. These ports are sealed and must not be opened.
- For devices with a temperature isolator or capillary, a suitable fastening device (mounting bracket) is recommended.
- For more detailed installation instructions, Endress+Hauser provides its customers with the free "Applicator Sizing Diaphragm Seal" tool, which is available on CD or can be downloaded online at "www.endress.com/applicator".

Capillary

In order to obtain more precise measurement results and to avoid a defect in the device, mount the capillaries as follows:

- vibration-free (in order to avoid additional pressure fluctuations)
- not in the vicinity of heating or cooling lines
- insulate if the ambient temperature is below or above the reference temperature
- with a bending radius of ≥ 100 mm (3.94 in).
- When using diaphragm seal systems with capillaries, sufficient strain relief must be allowed for in order to prevent the capillary bending down (capillary bending radius ≥ 100 mm (3.94 in)).
- In the case of devices with diaphragm seals and capillaries, the zero point shift caused by the hydrostatic pressure of the filling liquid column in the capillaries must be taken into account when selecting the measuring cell. If a measuring cell with a small measuring range is selected, a position adjustment can cause range violation.

Heat insulation

The PMP75 must only be insulated up to a certain height. The maximum permitted insulation height is indicated on the devices and applies to an insulation material with a heat conductivity ≤ 0.04 W/(m x K) and to the maximum permitted ambient and process temperature. The data were determined under the most critical application "quiescent air".

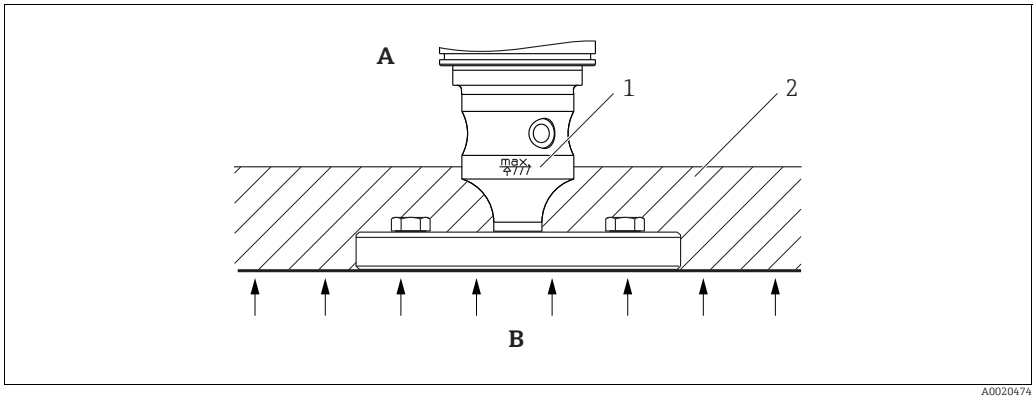

Maximum insulation height, here indicated on a PMP75 with a flange

A	*Ambient temperature*
B	*Process temperature*
1	*Maximum permitted insulation height*
2	*Insulation material*

Mounting with temperature isolator

Endress+Hauser recommends the use of temperature isolators in the event of constant extreme media temperatures which cause the maximum permissible electronics temperature of +85 °C (185 °F) to be exceeded.
Depending on the filling oil used, diaphragm seal systems with temperature isolators can be used up to a maximum temperature of 260 °C (500 °F) → 📄 97, "Diaphragm seal filling oils" section.
To minimize the influence of rising heat, Endress+Hauser recommends the device be mounted horizontally or with the housing pointing downwards. The additional installation height also brings about a zero point shift of maximum 21 mbar (0.315 psi) due to the hydrostatic column in the temperature isolator. You can correct this zero point shift at the device.

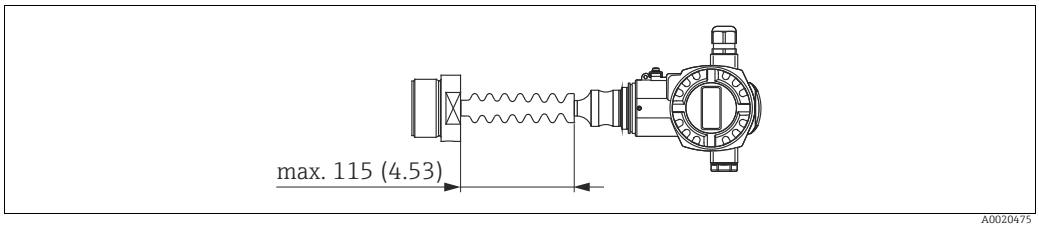

PMP75 with temperature isolator, material 316L (1.4404)

Vacuum applications

Installation instructions

For applications under vacuum, Endress+Hauser recommends mounting the pressure transmitter below the diaphragm seal. This prevents vacuum load of the diaphragm seal caused by the presence of fill fluid in the capillary.
When the pressure transmitter is mounted above the diaphragm seal, the maximum height difference H1 in accordance with the illustration below must not be exceeded.

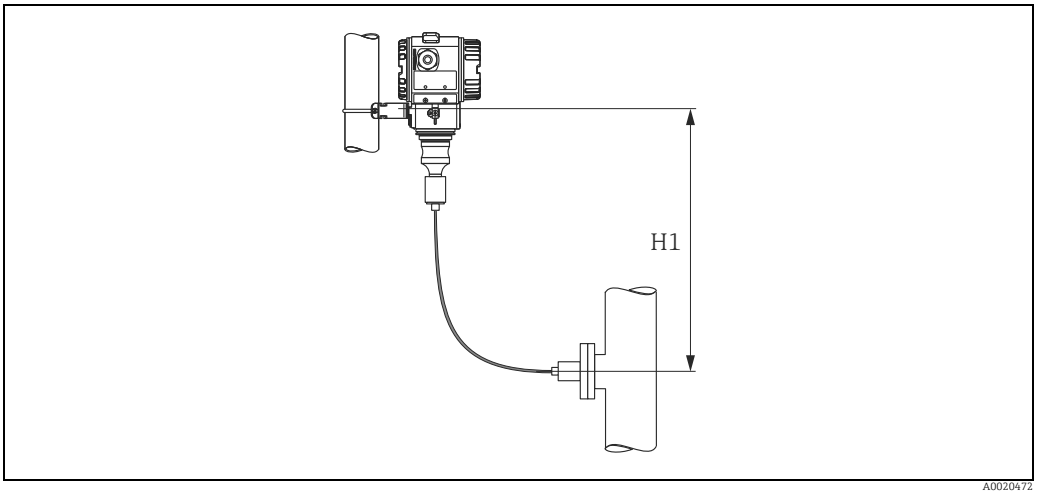

Installation above the diaphragm seal

The maximum height difference is dependent on the density of the filling oil and the smallest ever pressure that is permitted to occur at the diaphragm seal (empty tank), see the following illustration, on the right.

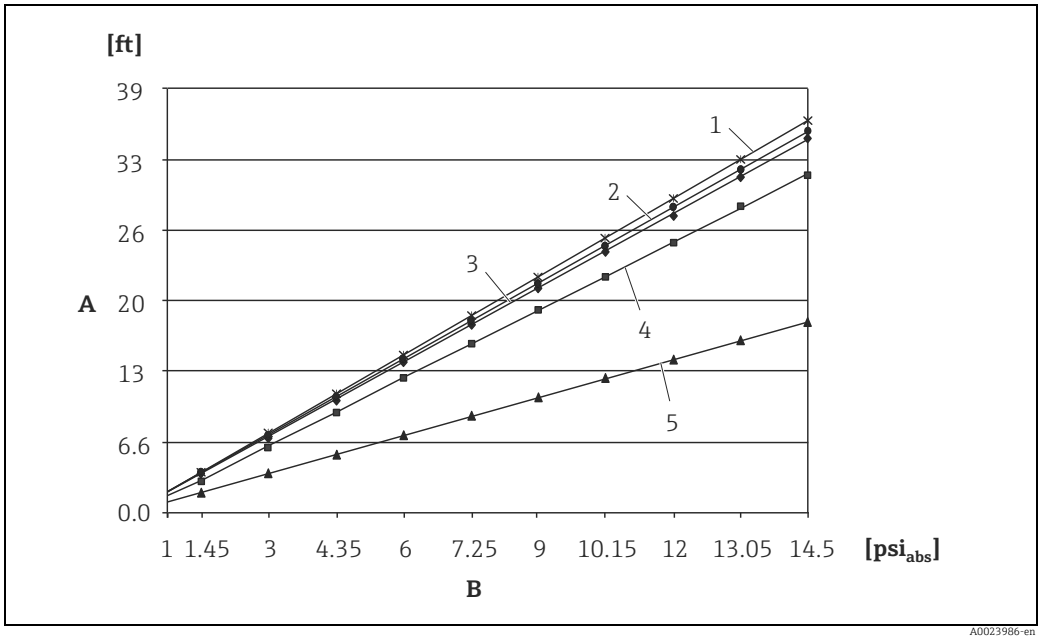

Diagram of maximum installation height above the diaphragm seal for vacuum applications

A *Height difference H1*
B *Pressure at diaphragm seal*
1 *Low-temperature oil*
2 *Vegetable oil*
3 *Silicone oil*
4 *High-temperature oil*
5 *Inert oil*

Certificates and approvals

CE mark

The device meets the legal requirements of the relevant EC directive.
Endress+Hauser confirms that the device has been successfully tested by applying the CE mark.

C-tick mark

The measuring system meets the EMC requirements of the "Australian Communications and Media Authority (ACMA)".

Ex approvals

- ATEX
- FM
- CSA
- NEPSI
- IECEx
- TIIS
- GOST
- Also combinations of different approvals

All explosion protection data are given in separate documentation which is available upon request. The Ex documentation is supplied as standard with all devices approved for use in explosion hazardous areas.
→ 📄 107 ff, "Safety Instructions" and "Installation/Control Drawings" sections.

Suitability for hygienic processes

- Materials in contact with food comply with EC framework Regulation No. 1935/2004.
- The Cerabar S is suitable for use in hygienic processes.
  Overview of suitable process connections from → 📄 43.
  Many versions meet the requirements of 3A-Sanitary Standard No. 74 and are certified by the EHEDG. Suitable fittings and seals must be used to ensure hygiene-compliant design according to the specifications of 3A and EHEDG.

CERTIFIED EHEDG EUROPEAN HYGIENIC ENGINEERING & DESIGN GROUP TYPE EL October 2007 A0020028	3A 74- A0020029

The gap-free connections can be cleaned without residue using the usual cleaning methods.

Functional safety SIL/ IEC 61508 Declaration of Conformity (optional)

The Cerabar S devices with a 4 to 20 mA output signal have been developed in accordance with the IEC 61508 standard. These devices can be used to monitor the process level and pressure up to SIL 3.
For a detailed description of the safety functions with Cerabar S, settings and functional safety data, see the "Functional safety manual - Cerabar S" SD00190P/00.
For devices up to SIL 3 / IEC 61508 Declarations of Conformity see:

Ordering information:
Product Configurator, "Additional options 1" and "Additional options 2" ordering feature, option "E".

Overfill prevention

WHG (see document ZE00260P).

Ordering information:
Product Configurator, "Approval" ordering feature, option "F".

CRN approvals	Some device versions have CRN approval. For a CRN-approved device, a CRN-approved process connection must be ordered with a CSA approval. These devices are fitted with a separate plate bearing the registration number 0F10525.5C. PMP75 devices with a capillary are not CRN-approved. Ordering information: Product Configurator, "Process connection; Material" ordering feature and Product Configurator, "Approval" ordering feature
Standards and guidelines	DIN EN 60770 (IEC 60770): Transmitters for use in industrial-process control systems Part 1: Methods for performance evaluation DIN 16086: Electrical pressure measuring instruments, pressure sensors, pressure transmitters, pressure measuring instruments, concepts, specifications on data sheets EN 61326-X: EMC product family standard for electrical equipment for measurement, control and laboratory use. WELMEC guide 8.8 "General and Administrative Aspects of the Voluntary System of Modular Evaluation of Measuring instruments under the MID". OIML R117-1 Edition 2007 (E) "Dynamic measuring systems for liquids other than water". EN 12405-1/A1 Edition 2006 "Gas meters – Conversion devices – Part 1: Volume conversion".
Pressure Equipment Directive (PED)	The devices PMC71, PMP71 and PMP75 correspond to Article 3 (3) of the EC directive 97/23/EC (Pressure Equipment Directive) and have been designed and manufactured according to good engineering practice. The following also applies: – PMP71 with threaded connection and internal process isolating diaphragm PN > 200 as well as oval flange adapter PN > 200: Suitable for stable gases in group 1, category I – PMP75 with pipe diaphragm seal ≥ 1.5"/PN 40: Suitable for stable gases in group 1, category II – PMP75 with separators PN > 200 ≥ 1.5"/PN40: Suitable for stable gases in group 1, category I – PMP75 with threaded connection PN > 200
Marine approval	▪ GL ▪ ABS Ordering information: Product Configurator, "Additional options1" or "Additional options 2" ordering feature, option "S".
Drinking water approval	PMC71/PMP71: NSF 61 approval Ordering information: Product Configurator, "Additional options 2" ordering feature, option "F".
Approvals for custody transfer	All aspects of OIML R117-1 Edition 2007 (E) and EN 12405-1/A1 Edition 2006 are fulfilled.
MID Parts Certificate	TC7975

Classification of process sealing between electrical systems and (flammable or combustible) process fluids in accordance with ANSI/ISA 12.27.01

Endress+Hauser devices are designed in accordance with ANSI/ISA 12.27.01. allowing the user to waive the use and save the cost of installing external secondary process seals in the conduit as required by the process sealing sections of ANSI/NFPA 70 (NEC) and CSA 22.1 (CEC). These instruments comply with the North American installation practice and provide a very safe and cost-saving installation for pressurized applications with hazardous fluids. Please refer to the following table for the seal class assigned (single seal or dual seal):

Device	Approval	Remark	Single seal MWP	Dual seal MWP
PMC71	CSA C/US IS, XP	except separate housing	-	60 bar (900 psi)
	CSA C/US IS	With separate housing	40 bar (600 psi)	-
PMP71	CSA C/US XP, XP+IS	except separate housing	400 bar (6000 psi)	-
	CSA C/US IS	except separate housing	> 200 to 400 bar (> 3000 to 6000 psi)	≤ 200 bar (3000 psi)
	CSA C/US IS	With separate housing	400 bar (6000 psi)	-
PMP75	XP, XP+IS	except separate housing	400 bar (6000 psi)	-
	CSA C/US IS	except separate housing	> 200 to 400 bar (> 3000 to 6000 psi)	≤ 200 bar (3000 psi)
	CSA C/US IS	With separate housing	400 bar (6000 psi)	-

Further information can be found in the control drawings of the relevant devices.

Inspection certificate

Designation	PMC71	PMP71	PMP75	Option
Material test certificate for wetted components, inspection certificate as per EN10204-3.1 acc. to specification 52005759	✔	✔	✔	B [1]
Certificate of conformity NACE MR0175, wetted metallic parts	–	✔	✔	C [1]
Material test certificate for wetted components as per EN 10204 3.1 and NACE MR0175 material, inspection certificate as per EN10204-3.1 acc. to specification 52010806	–	✔	✔	D [1]
Individual testing with test certificate, inspection certificate as per EN10204-3.1	✔	✔	✔	3 [1]
Overpressure test with certificate, inspection certificate as per EN10204-3.1	✔	✔	✔	4 [1]
Helium leak test EN 1518 with certificate, inspection certificate as per EN10204-3.1	✔	✔	–	5 [1]
EN10204-3.1 wetted material +Ra, Ra= surface roughness, dimension test, inspection certificate	✔	–	–	6 [1]
EN10204-3.1 Delta-Ferrit content test, inspection certificate	✔	–	–	8 [1]
3.1 Material certificate, wetted metallic parts, EN10204-3.1 inspection certificate	✔	✔	✔	JA [2]
Conformity to NACE MR0175, wetted metallic parts	–	✔	✔	JB [2]

1) Product Configurator, "Additional options 1" and "Additional options 2" ordering feature

2) Product Configurator "Test, Certificate" ordering feature

Calibration

Designation	PMC71	PMP71	PMP75	Option [1]
Sensor range; mbar/bar	✔	✔	✔	1
Sensor range; kPa/MPa	✔	✔	✔	2
Sensor range; mmH2O/mH2O	✔	✔	✔	3
Sensor range; inH2O/ftH2O	✔	✔	✔	4
Sensor range; psi	✔	✔	✔	6
Customer-specific; see additional specification	✔	✔	✔	B
Factory calibration certificate, 5-point; see additional specification	✔	✔	✔	C
DKD/DAkkS certificate; see additional specification	✔	✔	✔	D
Customized pressure; see additional specification	✔	✔	✔	E
Customized level; see additional specification	✔	✔	✔	F
Customized pressure + 5-point factory calibration certificate; see additional specification	✔	✔	✔	H
Customized level + 5-point factory calibration certificate; see additional specification	✔	✔	✔	I
Platinum; see additional specification	✔	✔	–	K
Platinum + factory calibration certificate 5-point; see additional specification	✔	✔	–	L
Platinum + DKD/DAkkS certificate; see additional specification	✔	✔	–	M

1) Product Configurator, "Calibration; Unit" ordering feature

Certificate of Compliance ASME BPE

Ordering information:
Product Configurator, "Additional options 1" and "Additional options 2" ordering feature, option "L".

Ordering information

Detailed ordering information is available from the following sources:
- In the Product Configurator on the Endress+Hauser website: www.endress.com → Select country → Instruments → Select device → Product page function: Configure this product
- From your Endress+Hauser Sales Center: www.endress.com/worldwide

Product Configurator - the tool for individual product configuration

- Up-to-the-minute configuration data
- Depending on the device: Direct input of measuring point-specific information such as measuring range or operating language
- Automatic verification of exclusion criteria
- Automatic creation of the order code and its breakdown in PDF or Excel output format
- Ability to order directly in the Endress+Hauser Online Shop

Configuration data sheet

Pressure

The following configuration data sheet must be completed and included with the order if the option "E" or "H" has been selected in the Product Configurator, "Calibration; Unit" ordering feature.

Pressure unit

❑ mbar	❑ mmH_2O [1]	❑ mmHg [2]	❑ Pascal	❑ torr
❑ bar	❑ mH_2O [1]	❑ inHg [2]	❑ hPa	
	❑ ftH_2O [1]		❑ kPa	❑ g/cm^2
❑ psi	❑ inH_2O [1]	❑ gf/cm^2	❑ MPa	❑ kg/cm^2
		❑ kgf/cm^2		
				❑ lb/ft^2
				❑ atm

[1] The conversion factor of the pressure unit refers to a reference temperature of 4 °C (39.2 °F).
[2] The conversion factor of the pressure units refers to a reference temperature of 0 °C (32 °F).

Calibration range / Output

Lower range value (LRV):_____ [pressure engineering unit)]
Upper range value (URV):_____ [pressure engineering unit)]

Display
Information

Display the contents of the main line [1]
❑ Main Value [PV] (Default)
❑ Main Value [%]
❑ Pressure
❑ Current [mA] (HART only)
❑ Temperature
❑ Error number
❑ Alternating display

[1] Depending on sensor and communication variant

Damping

Damping: _____ sec (Default 2 sec)

Smallest span (factory calibration) → 📄 11.

Level

The following configuration data sheet must be completed and included with the order if the option "F" or "T" has been selected in the Product Configurator, "Calibration; Unit" ordering feature.

Pressure unit

❑ mbar	❑ mmH_2O [1]	❑ mmHg [2]	❑ Pascal	❑ torr
❑ bar	❑ mH_2O [1]	❑ inHg [2]	❑ hPa	
	❑ ftH_2O [1]		❑ kPa	❑ g/cm^2
❑ psi	❑ inH_2O [1]	❑ gf/cm^2	❑ MPa	❑ kg/cm^2
		❑ kgf/cm^2		
				❑ lb/ft^2
				❑ atm

Output unit (scaled unit)

Mass	Lengths	Volume	Volume	Percent
❑ kg	❑ m	❑ l	❑ USgal	❑ %
❑ t	❑ dm	❑ hl	❑ impgal	
❑ lb	❑ cm		❑ USbblPETR	
	❑ mm	❑ m^3		
		❑ ft^3		
	❑ ft			
	❑ inch			

Empty pressure [a]:
Low pressure value (empty) _____ [pressure engineering unit]

Empty calibration [a]:
Low level value (empty) _____ [Scaled unit]

Full pressure [b]:
High pressure value (full) _____ [pressure engineering unit]

Full calibration [b]:
High level value (full) _____ [Scaled unit]

Example

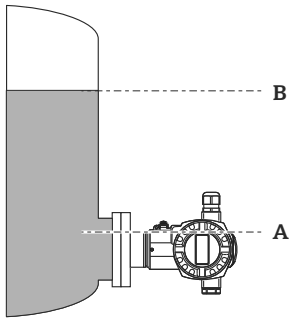

A0020477

A *0 mbar / 0m*

B *300 mbar (4.5psi) / 3 m (9.8 ft).*

[1] The conversion factor of the pressure unit refers to a reference temperature of 4 °C (39.2 °F).
[2] The conversion factor of the pressure units refers to a reference temperature of 0 °C (32 °F).

Display Information

Display the contents of the main line [1]
❑ Main Value [PV] (Default)
❑ Main Value [%]
❑ Pressure
❑ Current [mA] (HART only)
❑ Temperature
❑ Level before lin.
❑ Tank content
❑ Error number
❑ Alternating display

[1] Depending on sensor and communication variant

Damping

Damping: _____ sec (Default 2 sec)

Additional documentation

Field of Activities

- Pressure measurement, powerful instruments for process pressure, differential pressure, level and flow: FA00004P/00/EN

Technical Information

- Deltabar S: TI00382P/00/EN
- Deltapilot S: TI00416P/00/EN
- EMC test procedures TI00241F/00/EN

Operating Instructions

4 to 20 mA HART:
- Cerabar S: BA00271P/00/EN
- Description of device functions Cerabar S/Deltabar S/Deltapilot S: BA00274P/00/EN

4 to 20 mA HART with MID parts certificate:
- BA00412P/00/EN
- Description of Device Functions: BA00413P/00/EN

PROFIBUS PA:
- Cerabar S: BA00295P/00/EN
- Description of device functions Cerabar S/Deltabar S/Deltapilot S: BA00296P/00/EN

FOUNDATION Fieldbus:
- Cerabar S: BA00302P/00/EN
- Description of device functions Cerabar S/Deltabar S/Deltapilot S: BA00303P/00/EN

Brief Operating Instructions

- 4 to 20 mA HART, Cerabar S: KA01019P/00/EN
- PROFIBUS PA, Cerabar S: KA01022P/00/EN
- FOUNDATION Fieldbus, Cerabar S: KA01025P/00/EN

Functional safety manual (SIL)

- Cerabar S (4 to 20 mA): SD00190P/00/EN

Overfill prevention

- WHG: ZE00260P/00/DE

Safety Instructions

Directive	Device	Electronics	Documentation	Option [1)]
ATEX II 1/2 G Ex ia IIC T6	PMC71, PMP71, PMP75	– 4...20 mA HART, PROFIBUS PA, FOUNDATION Fieldbus	– XA00244P	1
ATEX II 1/2 D Ex ia	PMP71, PMP75	– 4...20 mA HART, PROFIBUS PA, FOUNDATION Fieldbus	– XA00246P – XA00289P	2
ATEX II 1/2D Ex tD	PMC71	– 4...20 mA HART, PROFIBUS PA, FOUNDATION Fieldbus	– XA00247P – XA00290P	2
ATEX II 1/3D Ex tD	PMP71, PMP75	– 4...20 mA HART, PROFIBUS PA, FOUNDATION Fieldbus	– XA00248P – XA00291P	4
ATEX II 2G Ex d IIC T6 Gb	PMP71, PMP75	– 4...20 mA HART, PROFIBUS PA, FOUNDATION Fieldbus	– XA00249P	5
ATEX II 2G Ex d [ia] IIC T6 Gb	PMC71	– 4...20 mA HART, PROFIBUS PA, FOUNDATION Fieldbus	– XA00250P	5
ATEX II 1/2G Ex ia IIC T6, WHG	PMC71, PMP71, PMP75	– 4...20 mA HART, PROFIBUS PA, FOUNDATION Fieldbus	– XA00244P	6
ATEX II 3 G Ex nA II T6	PMC71, PMP71, PMP75	– 4...20 mA HART, PROFIBUS PA, FOUNDATION Fieldbus	– XA00251P	7
ATEX II 1/2G Ex ia + II 1/2D Ex iaD	PMC71, PMP71, PMP75	– 4...20 mA HART, PROFIBUS PA, FOUNDATION Fieldbus	– XA00253P	3
ATEX II 1G Ex ia + II 1D Ex iaD	PMC71, PMP71, PMP75	– 4...20 mA HART, PROFIBUS PA, FOUNDATION Fieldbus	– XA00276P	8
ATEX II 1/2G Ex ia IIC T6+II 2G Ex d IIC T6	PMP71, PMP75	– 4...20 mA HART, PROFIBUS PA, FOUNDATION Fieldbus	– XA00252P	B

Directive	Device	Electronics	Documentation	Option [1]
ATEX II Ex ia + FM IS + CSA IS ATEX II 1/2G Ex ia IIC T6 + FM/CSA IS Cl.I,II,III Div.1 Gr.A-G, FM/CSA: Zone 0,1,2	PMC71	– 4...20 mA HART, PROFIBUS PA, FOUNDATION Fieldbus – HART – PROFIBUS PA, FOUNDATION Fieldbus	– XA00244P – XA00593P + XA01059P – XA00596P + XA01060P	E
ATEX II Ex ia / Ex d + FM/CSA IS + XP ATEX II 1/2G Ex ia IIC T6+ ATEX II 2G Ex d IIC T6+ FM/CSA IS + XP Cl.I.II Div.1 Gr.A-G/B-G FM: Zone 1,2/CSA: Zone 1,2	PMP71, PMP75	– 4...20 mA HART, PROFIBUS PA, FOUNDATION Fieldbus – HART – PROFIBUS PA, FOUNDATION Fieldbus	– XA00252P – XA00592P + XA01197P – XA00590P + XA01198P	F

1) Product Configurator, "Approval" ordering feature

Directive	Device	Electronic insert	Documentation	Option [1]
IECEx Zone 0/1 Ex ia IIC T6	PMC71, PMP71, PMP75	– 4 to 20 mA HART	– XB00005P	I
IEC Ex d[ia] IIC T6 Gb	PMC71	– 4 to 20 mA HART, PROFIBUS PA, FOUNDATION Fieldbus	– XA00511P	B
IEC Ex d IIC T6 Gb	PMP71, PMP75	– 4 to 20 mA HART, PROFIBUS PA, FOUNDATION Fieldbus	– XA00510P	M

1) Product Configurator, "Approval" ordering feature

Directive	Device	Electronic insert	Documentation	Option [1]
NEPSI Ex ia IIC T6	PMC71, PMP71, PMP75	– 4 to 20 mA HART, PROFIBUS PA, FOUNDATION Fieldbus	– XA00549P	H
NEPSI Ex d IIC T6	PMP71, PMP75	– 4 to 20 mA HART, PROFIBUS PA, FOUNDATION Fieldbus	– XA00551P	G
NEPSI Ex d[ia] IIC T6	PMC71	– 4 to 20 mA HART, PROFIBUS PA, FOUNDATION Fieldbus	– XA00551P	G

1) Product Configurator, "Approval" ordering feature

Directive	Device	Electronic insert	Documentation	Option [1]
TIIS Ex d [ia] IIC T6	PMC71	– 4 to 20 mA HART	– TC17436	L
TIIS Ex d [ia] IIC T4	PMC71	– 4 to 20 mA HART	– TC17398, TC17399	M
TIIS Ex d IIC T6	PMP71 (700 bar version)	– 4 to 20 mA HART	– TC17445	L
TIIS Ex d IIC T6	PMP71, PMP75	– 4 to 20 mA HART	– TC17446	L

1) Product Configurator, "Approval" ordering feature

Directive	Device	Electronic insert	Documentation	Option [1]
INMETRO Ex ia IIC T6 Ga/Gb	PMC71, PMP71, PMP75	– 4...20 mA HART, PROFIBUS PA, FOUNDATION Fieldbus	– XA01315P/00	J
INMETRO Ex d IIC T6 Gb	PMP71, PMP75	– 4...20 mA HART, PROFIBUS PA, FOUNDATION Fieldbus	– XA01279P/00	O
INMETRO Ex ta IIIC Da/Db	PMP71, PMP75	– 4...20 mA HART, PROFIBUS PA, FOUNDATION Fieldbus	– XA01313P/00	Z
INMETRO Ex d ia IIC T6 Gb	PMC71	– 4...20 mA HART, PROFIBUS PA, FOUNDATION Fieldbus	– XA01280P/00	P
INMETRO Ex ia IIIC Da/Db	PMC71	– 4...20 mA HART, PROFIBUS PA, FOUNDATION Fieldbus	– XA01314P/00	Z

1) Product Configurator, "Approval" ordering feature

Installation/Control Drawings

Directive	Device	Electronics	Documentation	Option [1]
FM IS Class I, II, III, Division 1, Groups A – G; NI, Class I Division 2, Groups A – D; AEx ia	PMC71, PMP71, PMP75	– 4 to 20 mA HART – PROFIBUS PA, FOUNDATION Fieldbus	– XA01059P – XA01060P	S
CSA IS Class I, II, III, Division 1, Groups A – G; Class I Division 2, Groups A – G	PMC71, PMP71, PMP75	– 4 to 20 mA HART – PROFIBUS PA, FOUNDATION Fieldbus	– XA00593P – XA00596P	U
FM IS + XP Class I, Division 1, Groups A – D	PMP71, PMP75	– 4 to 20 mA HART – PROFIBUS PA, FOUNDATION Fieldbus	– XA01197P – XA01198P	C
CSA IS + XP Class I Division 1, Groups A – D	PMP71, PMP75	– 4 to 20 mA HART – PROFIBUS PA, FOUNDATION Fieldbus	– XA00592P – XA00590P	D
FM/CSA IS + XP Class I Division 1, Groups A – D	PMP71, PMP75	– 4 to 20 mA HART – PROFIBUS PA, FOUNDATION Fieldbus	– XA00592P + XA01197P – XA01198P + XA00590P	E
FM NI Cl.I Div.2 Groups A - D, Zone 2	PMC71, PMP71, PMP75	– 4 to 20 mA HART, PROFIBUS PA, FOUNDATION Fieldbus	– XA01063P	R
FM XP Cl.I Div.1 Groups A - D, AEx d, Zone 1,2	PMC71, PMP71, PMP75	– 4 to 20 mA HART, PROFIBUS PA, FOUNDATION Fieldbus	– XA01070P	T
FM DIP Cl.II,III Div.1 Gr.E-G, Zone 21,22	PMP71, PMP75	– 4...20 mA HART, PROFIBUS PA, FOUNDATION Fieldbus	– FM3017778	Q
CSA C/US XP Cl.I Div.1 Gr.B-D, Ex d, Zone 1,2	PMC71, PMP71, PMP75	– 4...20 mA HART, PROFIBUS PA, FOUNDATION Fieldbus	– ZD00230P + XA00599P	V

1) Product Configurator, "Approval" ordering feature

Registered trademarks

HART®	Registered trademark of the HART Communication Foundation, Austin, USA
PROFIBUS®	Registered trademark of the PROFIBUS User Organization, Karlsruhe, Germany
FOUNDATION™ Fieldbus	Registered trademark of the Fieldbus Foundation, Austin, Texas, USA

71272900

www.addresses.endress.com

Endress+Hauser

People for Process Automation