Level | Pressure | Flow | Temperature | Liquid Analysis | Registration | Systems Components | Services | Solutions

Technical Information

Cerabar S PMC71, PMP71, PMP75

Process pressure measurement
Pressure transmitter with ceramic and metal sensors
Overload-resistant and function-monitored; Communication via HART, PROFIBUS PA or FOUNDATION Fieldbus

Application

The Cerabar S pressure transmitter is used for the following measuring tasks:

- Absolute pressure and gauge pressure in gases, steams or liquids in all areas of process engineering and process measurement technology
- Level, volume or mass measurements in liquids
- High process temperature
  - without diaphragm seals up to 150 °C (302 °F)
  - with typical diaphragm seals up to 400 °C (752 °F)
- High pressure up to 700 bar (10500 psi)
- MID part certificate as per OIML R117-1 Edition 2007 (E) and EN 12405-1/A1 Edition 2006
- International usage thanks to a wide range of approvals

Your benefits

- Very good reproducibility and long-term stability
- High reference accuracy: up to ±0.075 %, as PLATINUM version: ±0.05 %
- Turn down up to 100:1, higher on request
- Used for process pressure monitoring up to SIL3, certified to IEC 61508 by TÜV SÜD
- HistoROM®/M-DAT memory module
- Function-monitored from the measuring cell to the electronics
- Continuous modularity for differential pressure, hydrostatics and pressure (Deltabar S – Deltapilot S – Cerabar S), e.g.
  - replaceable display
  - universal electronics
- Quick commissioning with Quick Setup menu
- Menu-guided operation
- Extensive diagnostic functions
- Device versions compliant with ASME-BPE
- Usage in drinking water: NSF

TI00383P/00/EN/18.13
No 71229044

Endress+Hauser
People for Process Automation

Table of contents

Function and system design 4
Device selection 4
Measuring principle 5
Level measurement (level, volume and mass) 6
Applications suitable for custody transfer measurement 6
Communication protocol 6

Input 7
Measured variable 7
Measuring range 7
Explanation of terms 10

Output 11
Output signal 11
Signal range – 4 to 20 mA HART 11
Signal on alarm 11
Load – 4 to 20 mA HART 11
Resolution 12
Dead time, time constant 12
Dynamic behavior, current output 12
Dynamic behavior, HART 12
Dynamic behavior, PROFIBUS PA 13
Dynamic behavior, FOUNDATION Fieldbus 13
Damping 13
Protocol-specific data 14

Power supply 18
Electrical connection 18
Supply voltage 21
Current consumption 21
Cable entry 21
Cable specification 21
Residual ripple 21
Influence of power supply 21

Performance characteristics – general 22
Reference operating conditions 22
Uncertainty of measurement for small absolute pressure ranges . . 22
Long-term stability 22
Influence of the installation position 22

Performance characteristics – ceramic process isolating diaphragm 23
Reference accuracy – PMC71 23
Total performance – PMC71 23
Total error - PMC71 23
Warm-up period – PMC71 23
Thermal change of the zero output and the output span – PMC71 24

Performance characteristics – metallic process isolating diaphragm 25
Reference accuracy – PMP71, PMP75 25
Total performance – PMP71 25
Total error - PMP71 26
Warm-up period – PMP71, PMP75 26
Thermal change of the zero output and the output span – PMP71 and PMP75 26

Operating conditions (Installation) 27
General installation instructions 27
Measuring arrangement for devices without diaphragm seals – PMC71, PMP71 27
Heat insulation – PMC71 high-temperature version 27
Measuring arrangement for devices with diaphragm seals – PMP75 28
Wall and pipe-mounting 28
"Separate housing" version 28
Turning the housing 29
Oxygen applications 30
Silicone-free applications 30
Ultrapure gas applications 30
Applications with hydrogen 30

Operating conditions (Environment) 31
Ambient temperature range 31
Storage temperature range 31
Degree of protection 31
Climate class 31
Vibration resistance 31
Electromagnetic compatibility 32
Overvoltage protection (optional) 32

Operating conditions (Process) 33
Process temperature limits 33
Pressure specifications 34

Mechanical construction 35
Dimensions of T14 housing, optional display on the side 35
Dimensions of T17 housing (hygienic), optional display on the side 35
Process connections PMC71 (with ceramic process isolating diaphragm) 36
Process connections PMC71 (with ceramic process isolating diaphragm) (continued) 38
Process connections PMC71 (with ceramic process isolating diaphragm) (continued) 39
Process connections PMC71 (with ceramic process isolating diaphragm) (continued) 40
Process connections PMC71 (with ceramic process isolating diaphragm) (continued) 41
Process connections PMC71 (with ceramic process isolating diaphragm) (continued) 42
Process connections PMP71 (with metallic process isolating diaphragm) 43
Process connections PMP71 (with metallic process isolating diaphragm) (continued) 45
Process connections PMP71 (with metallic process isolating diaphragm) (continued) 47
Process connections PMP71 (with metallic process isolating diaphragm) (continued) 48
Height h for devices with flange 48
Oval flange 49
Prepared for diaphragm seal mount 49
PMP75 basic device 50

Process connections PMP75 (with diaphragm seal) 51
Process connections PMP75 (with diaphragm seal) (continued) . 52
Process connections PMP75 (with diaphragm seal) (continued) . 53
Process connections PMP75 (with diaphragm seal) (continued) . 55
Process connections PMP75 (with diaphragm seal) (continued) . 57
Process connections PMP75 (with diaphragm seal) (continued) . 58
Process connections PMP75 (with diaphragm seal) (continued) . 59
Process connections PMP75 (with diaphragm seal) (continued) . 61
Process connections PMP75 (with diaphragm seal) (continued) . 62
Process connections PMP75 (with diaphragm seal) (continued) . 64
Wall and pipe mounting with mounting bracket 65
Weight 65
Material (not wetted) 66
Material (wetted) 69

Human interface 70
Operating elements 70
Operating elements 71
Local operation 72
Remote operation 72
Hardware and software for onsite and remote operation 73

Planning instructions, diaphragm seal systems 75
Applications 75
Design and operation mode 75
Diaphragm seal filling oils 77
Cleaning instructions 77
Installation instructions 77

Certificates and approvals 80
CE mark 80
Ex approvals 80
Suitability for hygienic processes 80
Marine certificate 80
Functional safety SIL/ IEC 61508 Declaration of Conformity (optional) 80
Overfill prevention 80
CRN approvals 80
Pressure Equipment Directive (PED) 80
Drinking water approval 80
Standards and guidelines 81
Approvals for custody transfer 81
MID Parts Certificate 81
Classification of process sealing between electrical systems and (flammable or combustible) process fluids in accordance with ANSI/ ISA 12.27.01 81

Ordering information 82
PMC71 82
PMP71 86
PMP75 89

Additional documentation 94
Field of Activities 94
Technical Information 94
Operating Instructions 94
Brief Operating Instructions 94
Functional safety manual (SIL) 94
Safety Instructions 94
Installation/Control Drawings 95
Overfill prevention 95

Configuration data sheet 96
Level 96
Pressure 97

Registered trademarks. 98
HART® 98
PROFIBUS® 98
FOUNDATION™ Fieldbus 98

Patents. 98

Function and system design

Device selection

Cerabar S – Product family	PMC71 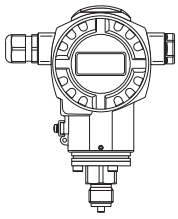 P01-PMC71xxx-16-xx-xx-xx-000 **With capacitance measuring cell and ceramic process isolating diaphragm (Ceraphire®)**	PMP71 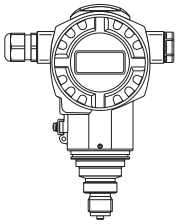 P01-PMP71xxx-16-xx-xx-xx-000 **With piezoresistive measuring cell and metallic welded process isolating diaphragm**	PMP75 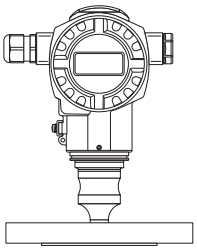 P01-PMP75xxx-16-xx-xx-xx-000 **With diaphragm seal**
Field of application	– Gauge pressure and absolute pressure – Level		
Process connections	– Diverse thread – DN 25 – DN 80 – ANSI 1 1/2" – 4" – JIS 50 A – 100 A	– Diverse thread – DN 25 – DN 80 – ANSI 1 1/2" – 4" – JIS 25 A – 100 A – Oval flange adapter – Prepared for diaphragm seal mount	– Wide range of diaphragm seals
Measuring ranges	From –100/0 to 100 mbar (–1.5/0 to 1.5 psi) to –1/0 to 40 bar (–15/0 to 600 psi)	From –100/0 to 100 mbar (–1.5/0 to 1.5 psi) to –1/0 to 700 bar (–15/0 to 10500 psi)	From –400/0 to 400 mbar (–6/0 to 6 psi) to –1/0 to 400 bar (–15/0 to 6000 psi)
OPL [1]	Max. 60 bar (900 psi)	Max. 1050 bar (15750 psi)	Max. 600 bar (9000 psi)
Process temperature range	–25 to +125°C (-13 to +257 °F)/ –20 to +150 °C (-4 to 302 °F)[2]	–40 to +125 °C (-40 to +257 °F)	-70 to 400 °C (-94 to 752 °F) Dependent on the filling oil
Ambient temperature range	■ Without LCD display: –40 to +85 °C (–40 to +185 °F)[3] ■ With LCD display: –20 to +70 °C (–4 to +158 °F) ■ Separate housing: -20 to +50 °C (-4 to +122 °F) ■ Diaphragm seal systems depending on the version		
Reference accuracy	– Up to ±0.075 % of the set span – PLATINUM version: up to ±0.05 % of the set span		Up to ±0.075 % of the set span
Supply voltage	– Version for non-hazardous areas: – 4...20 mA HART: 10.5 to 45 V DC – PROFIBUS PA and FOUNDATION Fieldbus: 9 to 32 V DC – Ex ia: 10.5 to 30 V DC		
Output	4 to 20 mA with superimposed HART protocol, PROFIBUS PA or FOUNDATION Fieldbus		
Options	– PMP71, PMP75: gold-rhodium coated process isolating diaphragm – PMP71, PMP75: NACE-compliant materials – PMC71, PMP71, PMP75: inspection certificate 3.1 – HistoROM®/M-DAT memory module – Separate housing		
Specialties	– Metal-free measurement with PVDF connection – Special cleaning of the transmitter to remove paint-wetting substances, for use in paint shops	– Process connections with minimum oil volume – Gas-tight, elastomer-free	– Wide range of diaphragm seals – For high media temperatures – Process connections with minimum oil volume – Completely welded versions

1) OPL: over pressure limit; dependent on the lowest-rated element, with regard to pressure, of the selected components

2) High-temperature version "T" for feature 100 "Additional option 1" or for feature 110 "Additional option 2"

3) PMP71 and PMP75: lower temperatures on request

Measuring principle

Ceramic process isolating diaphragm used for PMC71 (Ceraphire®)

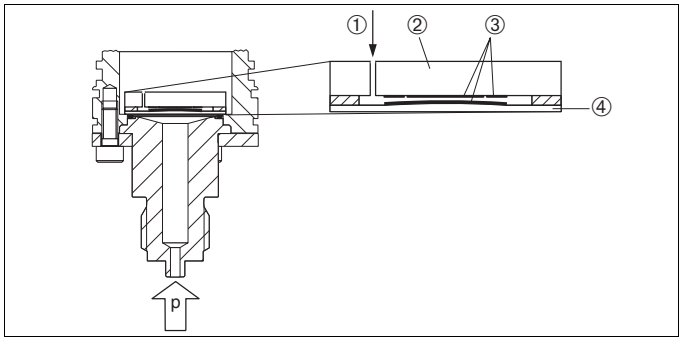

P01-PMC71xxx-03-xx-xx-xx-000

Ceramic sensor

1 *Air pressure (gauge pressure sensors)*
2 *Ceramic substrate*
3 *Electrodes*
4 *Ceramic process isolating diaphragm*

Metallic process isolating diaphragm used for PMP71 and PMP75

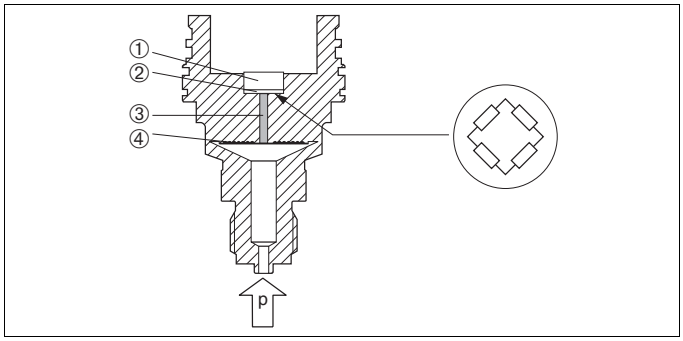

P01-PMP7xxxx-03-xx-xx-xx-000

Metal sensor

1 *Silicon measuring element, substrate*
2 *Wheatstone bridge*
3 *Channel with fill fluid*
4 *Metallic process isolating diaphragm*

Ceramic process isolating diaphragm used for PMC71 (Ceraphire®)

The ceramic sensor is a dry sensor, i.e. the process pressure acts directly on the robust ceramic process isolating diaphragm and deflects it. A pressure-dependent change in capacitance is measured at the electrodes of the ceramic substrate and the process isolating diaphragm. The measuring range is determined by the thickness of the ceramic process isolating diaphragm.

Advantages:
- Guaranteed overload resistance up to 40 times the nominal pressure (see column "OPL" in table on Page 7)
- Thanks to ultrapure 99.9% ceramic (Ceraphire®, see also "www.endress.com/ceraphire")
  - extremely high chemical stability, comparable with Alloy
  - less relaxation
  - high mechanical stability
- Suitable for vacuums
- Secondary containment for enhanced integrity
- Process temperatures up to 150 °C (302 °F)

Metallic process isolating diaphragm used for PMP71 and PMP75

PMP71

The operating pressure deflects the process isolating diaphragm and a fill fluid transfers the pressure to a resistance bridge (semiconductor technology). The pressure-dependent change in the bridge output voltage is measured and evaluated.

Advantages:
- Can be used for process pressures up to 700 bar (10500 psi) absolute pressure
- High long-term stability
- Guaranteed overload resistance up to 4 times the nominal pressure
- Secondary containment for enhanced integrity
- Significantly less thermal effect compared to diaphragm seal systems

PMP75

The operating pressure acts on the process isolating diaphragm of the diaphragm seal and is transferred to the process isolating diaphragm of the sensor by a diaphragm seal fill fluid. The process isolating diaphragm is deflected and a fill fluid transfers the pressure to a resistance measuring bridge. The pressure-dependent change in the bridge output voltage is measured and evaluated.

Advantages:
- Depending on the version, can be used for process pressures up to 400 bar (6000 psi) and extreme process temperatures
- High long-term stability
- Guaranteed overload resistance up to 4 times the nominal pressure
- Secondary containment for enhanced integrity

Level measurement (level, volume and mass)

Design and operation mode

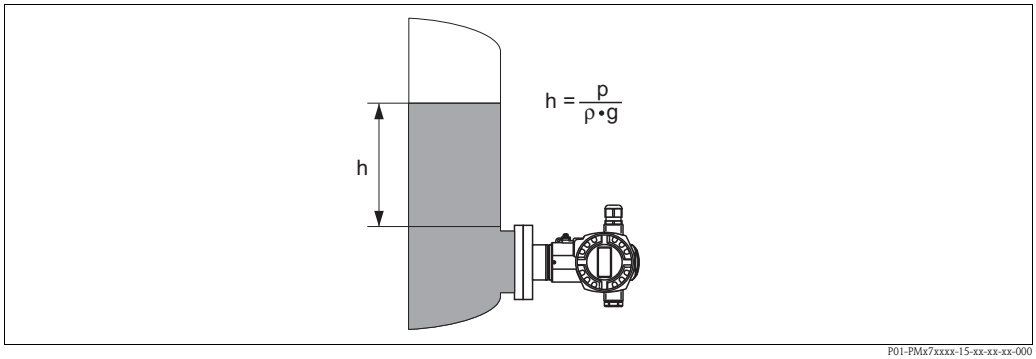

P01-PMx7xxxx-15-xx-xx-xx-000

Level measurement

h *Height (level)*
p *Pressure*
ρ *Density of the media*
g *Gravitation constant*

Your benefits

- Selection of the level operating mode which is optimum for your application in the device software.
- Volume and mass measurements in any tank shapes by means of a freely programmable characteristic curve.
- Choice of diverse level units with automatic unit conversion.
- A specific unit can be defined.
- Has a wide range of uses, even in the following cases:
  – in the event of foam formation
  – in tanks with agitators of screen fittings
  – in the event of liquid gases

Applications suitable for custody transfer measurement

The Parts Certificate is issued on the basis of the following standards:
- WELMEC guide 8.8 “General and Administrative Aspects of the Voluntary System of Modular Evaluation of Measuring instruments under the MID”.
- OIML R117-1 Edition 2007 (E) “Dynamic measuring systems for liquids other than water”.
- EN 12405-1/A1 Edition 2006 “Gas meters – Conversion devices – Part 1: Volume conversion”.

Communication protocol

- 4 to 20 mA with HART communication protocol
- PROFIBUS PA
  – The Endress+Hauser devices meet the requirements of the FISCO model.
  – Due to the low current consumption of 13 mA ± 1 mA, the following number of devices can be operated on one bus segment if installing as per FISCO:
    – up to 7 Cerabar S for Ex ia, CSA IS and FM IS applications
    – up to 27 Cerabar S for all other applications, e.g. in non-hazardous areas, Ex nA etc.

  Further information on PROFIBUS PA can be found in Operating Instructions BA00034S "PROFIBUS DP/PA: Guidelines for planning and commissioning" and in the PNO Guideline.
- FOUNDATION Fieldbus
  – The Endress+Hauser devices meet the requirements of the FISCO model.
  – Due to the low current consumption of 15,5 mA ± 1 mA, the following number of devices can be operated on one bus segment if installing as per FISCO:
    – up to 6 Cerabar S for Ex ia, CSA IS and FM IS applications
    – up to 24 Cerabar S for all other applications, e.g. in non-hazardous areas, Ex nA etc.

  Further information on FOUNDATION Fieldbus, such as requirements for bus system components can be found in Operating Instructions BA00013S "FOUNDATION Fieldbus Overview".

Input

Measured variable

Absolute pressure and gauge pressure, from which level (level, volume or mass) is derived

Measuring range

PMC71 – with ceramic process isolating diaphragm (Ceraphire®) for gauge pressure

Nominal value	Range limit		Smallest calibratable span [4]	MWP [1]	OPL [2]	Vacuum resistance	Versions in the order code [3]
	lower (LRL) [bar (psi)]	upper (URL) [bar (psi)]	[bar (psi)]	[bar (psi)]	[bar (psi)]	[bar_{abs} (psi_{abs})]	
100 mbar (1.5 psi)	–0.1 (–1.5)	+0.1 (+1.5)	0.005 (0.075)	2.7 (40.5)	4 (60)	0.7 (10.5)	1C
250 mbar (3,75 psi)	–0.25 (–4)	+0.25 (+4)	0.005 (0.075)	3.3 (49.5)	5 (75)	0.5 (7.5)	1E
400 mbar (6 psi)	–0.4 (–6)	+0.4 (+6)	0.005 (0.075)	5.3 (79.5)	8 (120)	0	1F
1 bar (15 psi)	–1 (–15)	+1 (+15)	0.01 (0.15)	6.7 (100.5)	10 (150)	0	1H
2 bar (30 psi)	–1 (–15)	+2 (+30)	0.02 (0.3)	12 (180)	18 (270)	0	1K
4 bar (60 psi)	–1 (–15)	+4 (+60)	0.04 (0.6)	16.7 (250.5)	25 (375)	0	1M
10 bar (150 psi)	–1 (–15)	+10 (+150)	0.1 (1.5)	26.7 (400.5)	40 (600)	0	1P
40 bar (600 psi)	–1 (–15)	+40 (+600)	0.4 (6)	40 (600)	60 (900)	0	1S

PMC71 – with ceramic process isolating diaphragm (Ceraphire®) for absolute pressure

Nominal value	Range limit		Smallest calibratable span [4]	MWP [1]	OPL [2]	Versions in the order code [3]
	lower (LRL) [bar_{abs} (psi_{abs})]	upper (URL) [bar_{abs} (psi_{abs})]	[bar (psi)]	[bar_{abs} (psi_{abs})]	[bar_{abs} (psi_{abs})]	
100 mbar (15 psi)	0	+0.1 (+1.5)	0.005 (0.075)	2.7 (40.5)	4 (60)	2C
250 mbar (3,75 psi)	0	+0.25 (+4)	0.005 (0.075)	3.3 (49.5)	5 (75)	2E
400 mbar (6 psi)	0	+0.4 (+6)	0.005 (0.075)	5.3 (79.5)	8 (120)	2F
1 bar (15 psi)	0	+1 (+15)	0.01 (0.15)	6.7 (100.5)	10 (150)	2H
2 bar (30 psi)	0	+2 (+30)	0.02 (0.3)	12 (180)	18 (270)	2K
4 bar (60 psi)	0	+4 (+60)	0.04 (0.6)	16.7 (250.5)	25 (375)	2M
10 bar (150 psi)	0	+10 (+150)	0.1 (1.5)	26.7 (400.5)	40 (600)	2P
40 bar (600 psi)	0	+40 (+600)	0.4 (6)	40 (600)	60 (900)	2S

1) The MWP (maximum working pressure) for the measuring device depends on the lowest-rated element, with regard to pressure, of the selected components, i.e. the process connection (→ 🗎 35 ff) has to taken into consideration in addition to the measuring cell (→ see Table above). Also observe pressure-temperature dependency. For the appropriate standards and further information, see → 🗎 34, "Pressure specifications" section.
2) OPL: over pressure limit depends on the lowest-rated element, with regard to pressure, of the selected components.
3) Version in the order code → see also → 🗎 82 ff, feature 40 "Sensor range; Sensor over pressure limit (= OPL)"
4) Turn down > 100:1 on request or can be set at the device

PMP71 and PMP75 – metallic process isolating diaphragm for gauge pressure

Nominal value	Range limit		Smallest calibratable span [5]	MWP [1]	OPL [2]	Vacuum resistance [3]	Versions in the order code [4]
	lower (LRL)	upper (URL)				Silicone oil/ Inert oil	
	[bar (psi)]	[bar (psi)]	[bar (psi)]	[bar (psi)]	[bar (psi)]	[bar_{abs} (psi_{abs})]	
400 mbar (6 psi)	–0.4 (–6)	+0.4 (+6)	0.005 (0.075)	4 (60)	6 (90)	0.01/0.04 (0.15/0.6)	1F
1 bar (15 psi)	–1 (–15)	+1 (+15)	0.01 (0.15)	6.7 (100)	10 (150)		1H
2 bar (30 psi)	–1 (–15)	+2 (+30)	0.02 (0.3)	13.3 (200)	20 (300)		1K
4 bar (60 psi)	–1 (–15)	+4 (+60)	0.04 (0.6)	18.7 (280.5)	28 (420)		1M
10 bar (150 psi)	–1 (–15)	+10 (+150)	0.1 (1.5)	26.7 (400.5)	40 (600)		1P
40 bar (600 psi)	–1 (–15)	+40 (+600)	0.4 (6)	100 (1500)	160 (2400)		1S
100 bar (1500 psi)	–1 (–15)	+100 (+1500)	1.0 (15)	100 (1500)	400 (6000)		1U
400 bar (6000 psi)	–1 (–15)	+400 (+6000)	4.0 (60)	400 (6000)	600 (9000)		1W
700 bar (10500) [6]	–1 (–15)	+700 (+10500)	7.0 (105)	700 (10500)	1050 (15750)		1X

PMP71 and PMP75 – metallic process isolating diaphragm for absolute pressure

Nominal value	Range limit		Smallest calibratable span [5]	MWP [1]	OPL [2]	Vacuum resistance [3]	Versions in the order code [4]
	lower (LRL)	upper (URL)				Silicone oil/ Inert oil	
	[bar_{abs}]	[bar_{abs}]	[bar]	[bar_{abs}]	[bar_{abs}]	[bar_{abs}]	
400 mbar (6 psi)	0	+0.4 (+6)	0.005 (0.075)	4 (60)	6 (90)	0.01/0.04 (0.15/0.6)	2F
1 bar (15 psi)	0	+1 (+15)	0.01 (0.15)	6.7 (100)	10 (150)		2H
2 bar (30 psi)	0	+2 (+30)	0.04 (0.6)	13.3 (200)	20 (300)		2K
4 bar (60 psi)	0	+4 (+60)	0.04 (0.6)	18.7 (280.5)	28 (420)		2M
10 bar (150 psi)	0	+10 (+150)	0.1 (1.5)	26.7 (400.5)	40 (600)		2P
40 bar (600 psi)	0	+40 (+600)	0.4 (6)	100 (1500)	160 (2400)		2S
100 bar (1500 psi)	0	+100 (+1500)	1.0 (15)	100 (1500)	400 (6000)		2U
400 bar (6000 psi)	0	+400 (+6000)	4.0 (60)	400 (6000)	600 (9000)		2W
700 bar (10500) [6]	0	+700 (+10500)	7.0 (105)	700 (10500)	1050 (15750)		2X

1) The MWP (maximum working pressure) for the measuring device depends on the lowest-rated element, with regard to pressure, of the selected components, i.e. the process connection (→ 🗎 35 ff) has to taken into consideration in addition to the measuring cell (→ see Table above). Also observe pressure-temperature dependency. For the appropriate standards and further information, see → 🗎 34, "Pressure specifications" section.
2) OPL: over pressure limit depends on the lowest-rated element, with regard to pressure, of the selected components.
3) The vacuum resistance applies for the measuring cell under reference operating conditions. The pressure and temperature application limits of the selected filling oil must also be observed for the PMP75. → 🗎 77, "Filling oil" section.
4) Version in the order code → 🗎 82 ff, feature 40 "Sensor range; Sensor over pressure limit (= OPL)"
5) Turn down > 100:1 on request or can be set at the device
6) PMP71 only, PMP75 on request

PMP71 - metallic process diaphragms for absolute pressure with MID parts certificate

Nominal value	Range limit		Min. WP for gas applications suitable for custody transfer measurement	Min. WP for liquid applications suitable for custody transfer measurement	MWP [1]	OPL [2]	Vacuum resistance [3] Silicone oil / inert oil	Versions in the order code [4]
	lower (LRL)	upper (URL) [5]						
[bar (psi)]	[bar (psi)]	[bar (psi)]	[bar (psi)]	[bar (psi)]	[bar (psi)]	[bar (psi)]	[bar (psi)]	
10 (150)	0	+10 (150)	0.5 (7.5)	0.5 (7.5)	26.7 (400.5)	40 (600)	0.01/0.04 (0.15/1)	MP
50 (750)	0	+50 (750)	10 (150)	2.5 (37.5)	100 (1500)	400 (6000)	0.01/0.04 (0.15/1)	MT
100 (1500)	0	+100 (1500)	5 (75)	5 (75)	100 (1500)	400 (6000)	0.01/0.04 (0.15/1)	MU

1) The MWP (maximum working pressure) for the measuring device depends on the lowest-rated element, with regard to pressure, of the selected components, i.e. the process connection (→ 🗎 35 ff) has to be taken into consideration in addition to the measuring cell (→ see Table above). Also observe pressure-temperature dependency. For the appropriate standards and further information, see → 🗎 34, "Pressure specifications" section.
2) OPL: over pressure limit depends on the lowest-rated element, with regard to pressure, of the selected components
3) The vacuum resistance applies for the measuring cell under reference operating conditions.
4) Version in the order code → 🗎 82 ff, feature 40 "Sensor range; sensor over pressure limit (= OPL)"
5) Max. WP for gas and liquid applications suitable for custody transfer measurement

Explanation of terms

Explanation of the terms "turn down (TD)", "set span" and "zero-based span"

Case 1:
- |Lower range value (LRV)| ≤ |Upper range value (URV)|

Example:
- Lower range value (LRV) = 0 bar
- Upper range value (URV) = 0.5 bar (7.5 psi)
- Nominal value (URL) = 1 bar (15 psi)

Turn down:
- TD = URL / |URV| = 2:1

Set span:
- URV – LRV = 0.5 bar (7.5 psi)
  This span is based on the zero point.

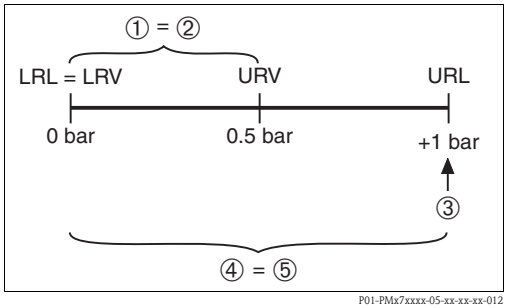

Example: 1 bar (15 psi) measuring cell

Case 2:
- |Lower range value (LRV)| ≤ |Upper range value (URV)|

Example:
- Lower range value (LRV) = 0 bar
- Upper range value (URV) = 0.5 bar (7.5 psi)
- Nominal value (URL) = 1 bar (15 psi)

Turn down:
- TD = URL / |URV| = 2:1

Set span:
- URV – LRV = 0.5 bar (7.5 psi)
  This span is based on the zero point.

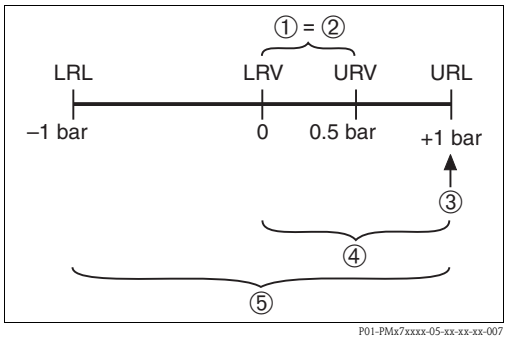

Example: 1 bar (15 psi) measuring cell

Case 3:
- |Lower range value (LRV)| ≥ |Upper range value (URV)|

Example:
- Lower range value (LRV) = –0.6 bar (–9 psi)
- Upper range value (URV) = 0 bar
- Nominal value (URL) = 1 bar (15 psi)

Turn down:
- TD = URL / |LRV| = 1.67:1

Set span:
- URV – LRV = 0.6 bar (9 psi)
  This span is based on the zero point.

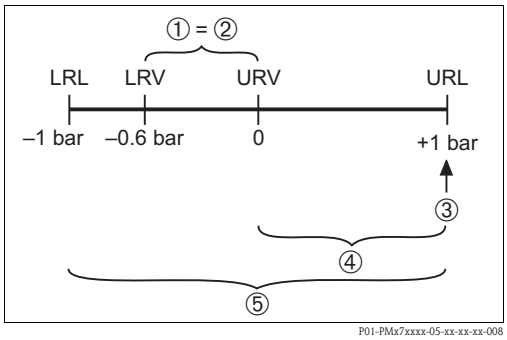

Example: 1 bar (15 psi) measuring cell

1	*Set span*
2	*Zero-based span*
3	*Nominal value ≙ upper range limit (URL)*
4	*Nominal measuring range*
5	*Sensor measuring range*
LRL	*Lower range limit*
URL	*Upper range limit*
LRV	*Lower range value*
URV	*Upper range value*

Output

Output signal

- 4 to 20 mA with superimposed digital communication protocol HART 5.0, 2-wire
- Digital communication signal PROFIBUS PA (Profile 3.0), 2-wire
  - signal coding: Manchester Bus Powered (MBP): Manchester II
  - data transmission rate: 31.25 KBit/s voltage mode
- Digital communication signal FOUNDATION Fieldbus, 2-wire
  - signal coding: Manchester Bus Powered (MBP): Manchester II
  - data transmission rate: 31.25 KBit/s voltage mode

Signal range – 4 to 20 mA HART

3.8 mA to 20.5 mA

Signal on alarm

As per NAMUR NE43

- 4 to 20 mA HART
  Options:
  - Max. alarm*: can be set from 21 to 23 mA
  - Hold measured value: last measured value is held
  - Min. alarm: 3.6 mA

  * Factory setting: 22 mA
- PROFIBUS PA: can be set in the Analog Input block,
  Options: Last Valid Out Value (factory setting), Fail Safe Value, Status Bad
- FOUNDATION Fieldbus: can be set in the Analog Input block,
  Options: Last Good Value, Fail Safe Value (factory setting), Wrong Value

Load – 4 to 20 mA HART

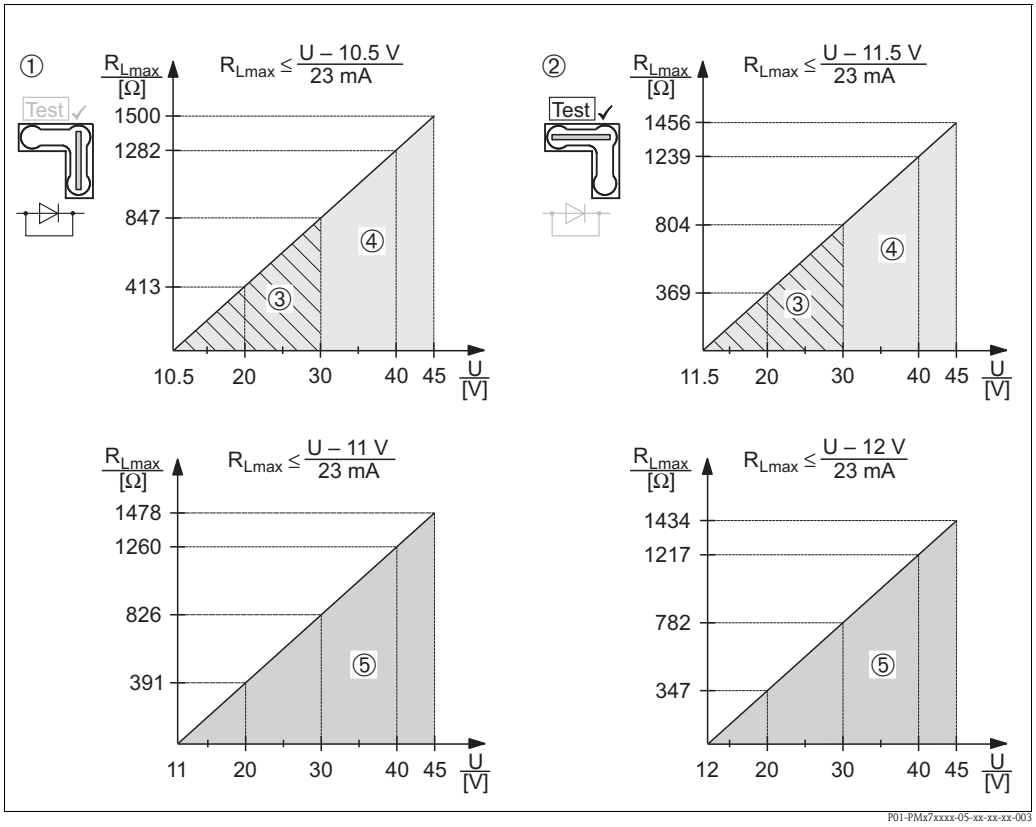

Load diagram, observe the position of the jumper and the explosion protection (→ See also Page 20, "Measuring a 4 to 20 mA test signal" section.)

1 Jumper for 4 to 20 mA test signal set to "Non-test" position
2 Jumper for 4 to 20 mA test signal set to "Test" position
3 Power supply 10.5 (11.5) to 30 V DC for 1/2 G, 1 GD, 1/2 GD, FM IS, CSA IS, IECEx ia, NEPSI Ex ia
4 Power supply 10.5 (11.5) to 45 V DC for devices for non-hazardous areas, 1/2 D, 1/3 D, 2 G Ex d, 3 G Ex nA, FM XP, FM DIP, FM NI, CSA XP, CSA dust ignition proof, NEPSI Ex d
5 Power supply 11 (12) to 45 V DC for PMC71, Ex d[ia], NEPSI Ex d[ia]
R_{Lmax} Maximum load resistance
U Supply voltage

Note!
When operating via a handheld terminal or via a PC with an operating program, a minimum communication resistance of 250 Ω must exist within the loop.

Resolution

- Current output: 1 µA
- Display: can be set (factory setting: presentation of the maximum accuracy of the transmitter)

Dead time, time constant

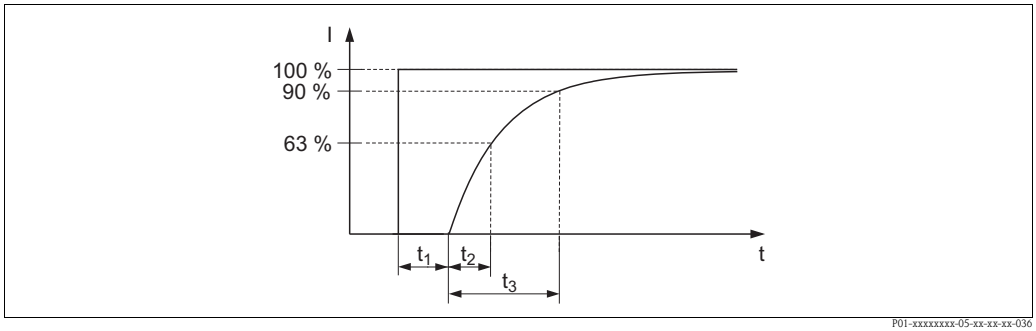

Presentation of the dead time and the time constant

Dynamic behavior, current output

Type		Measuring cell	Dead time (t_1) [ms]	Time constant T63 (t_2) [ms]	Time constant T90 (t_3) [ms]
PMC71	max.	all	90	120	276
PMP71	max.	▪ 400 mbar (6 psi) ▪ ≥ 1 bar (15 psi)	45	▪ 70 ▪ 35	▪ 161 ▪ 81
PMP75	max.	PMP71 + influence of the diaphragm seal			

Dynamic behavior, HART

A typical burst rate of 300 ms results in the following behavior:

Type		Measuring cell	Dead time (t_1) [ms]	Time constant T63 (t_2) [ms]	Time constant T90 (t_3) [ms]
PMC71	min.	all	250	370	436
	max.		1050	1170	1236
PMP71	min.	▪ 400 mbar (6 psi) ▪ ≥ 1 bar (15 psi)	205	▪ 275 ▪ 240	▪ 321 ▪ 241
	max.	▪ 400 mbar (6 psi) ▪ ≥ 1 bar (15 psi)	1005	▪ 1075 ▪ 1040	▪ 1121 ▪ 1041
PMP75	max.	PMP71 + influence of the diaphragm seal			

Reading cycle

- Acyclic: max. 3/s, typical 1/s (depends on command # and number of preambles)
- Cyclic (Burst): max. 3/s, typical 2/s

The Device commands the BURST MODE function for cyclic value transmission via the HART communication protocol.

Cycle time (Update time)

Cyclic (Burst): min. 300 ms

Response time

- Acyclic: min. 330 ms, typical 590 ms (depends on command # and number of preambles)
- Cyclic (Burst): min. 160 ms, typical 350 ms (depends on command # and number of preambles)

Dynamic behavior, PROFIBUS PA

A typical PLC cycle time of 1 s results in the following behavior:

Type		Measuring cell	Dead time (t_1) [ms]	Time constant T63 (t_2) [ms]	Time constant T90 (t_3) [ms]
PMC71	min.	all	125	245	311
	max.		1325	1445	1511
PMP71	min.	■ 400 mbar (6 psi) ■ ≥ 1 bar (15 psi)	80	■ 150 ■ 115	■ 196 ■ 116
	max.	■ 400 mbar (6 psi) ■ ≥ 1 bar (15 psi)	1280	■ 1350 ■ 1315	■ 1396 ■ 1316
PMP75	max.	PMP71 + influence of the diaphragm seal			

Reading cycle (PLC)

- Cyclic: max. 30/s (dependent on the number and type of function blocks used in a closed-control loop)
- Acyclic: typical 25/s

Cycle time (update time)

min. 200 ms
The cycle time in a bus segment in cyclic data communication depends on the number of devices, on the segment coupler used and on the internal PLC cycle time. A new value can be determined up to 5 times per second.

Response time

- Cyclic: approx. 10 to 13 ms (depends on Min. Slave Interval)
- Acyclic: approx. 60 to 70 ms (depends on Min. Slave Interval)

Dynamic behavior, FOUNDATION Fieldbus

A typical configuration for the macro cycle time (host system) of 1 s results in the following behavior:

Type		Measuring cell	Dead time (t_1) [ms]	Time constant T63 (t_2) [ms]	Time constant T90 (t_3) [ms]
PMC71	min.	all	135	255	321
	max.		1135	1255	1321
PMP71	min.	■ 400 mbar (6 psi) ■ ≥ 1 bar (15 psi)	90	■ 160 ■ 125	■ 206 ■ 126
	max.	■ 400 mbar (6 psi) ■ ≥ 1 bar (15 psi)	1090	■ 1160 ■ 1125	■ 1206 ■ 1126
PMP75	max.	PMP71 + influence of the diaphragm seal			

Reading cycle

- Cyclic: max. 10/s (dependent on the number and type of function blocks used in a closed-control loop)
- Acyclic: typical 10/s

Cycle time (update time)

Cyclic: min. 100 ms

Response time

- Cyclic: max. 20 ms (for standard bus parameter settings)
- Acyclic: typical 100 ms (for standard bus parameter settings)

Damping

A damping affects all outputs (output signal, display).

- Via onsite display, handheld terminal or PC with operating program, continuous from 0 to 999 s
- Additionally for HART and PROFIBUS PA: via DIP switch on the electronic insert, switch position "on" = set value and "off"
- Factory setting: 2 s

Protocol-specific data

HART

Manufacturer ID	17 (11 hex)
Device Type Code	24 (18 hex)
Device Revision	21 (15 hex) - SW version 02.1y.zz
HART spezification	5
DD Revision	■ 4 (russian in language selection) ■ 3 (netherlands in language selection)
Device description files (DTM, DD)	Information and files can be found: ■ www.endress.com ■ www.hartcomm.org
HART load	Min. 250 Ω
HART device variables	The measured values can be freely assigned to the device variables: **Measured values for PV (primary variable)** ■ Pressure ■ Level ■ Tank content **Measured values for SV, TV (second and third variable)** ■ Pressure **Measured values for QV (fourth variable)** ■ Temperature
Supported functions	■ Burst mode ■ Additional Transmitter Status ■ Device Locking ■ Alternative operating modes

PROFIBUS PA

Manufacturer ID	17 (11 hex)
Ident number	1541 hex
Profile Version	3.0 ■ SW Version 03.00.zz ■ SW Version 04.00.zz 3.02 ■ SW Version 04.01.zz (Device Revision 3) Compartibility SW version 03.00.zz and higher.
GSD Revision	■ 4 (SW Version 3.00.zz and 4.00.zz) ■ 5 (Device Revision 3)
DD Revision	■ 1 (SW Version 3.00.zz and 4.00.zz) ■ 1 (Device Revision 3)
GSD File	Information and files can be found: ■ www.endress.com ■ www.profibus.org
DD Files	
Output values	**Measured values for PV (über Analog Input Function Block)** ■ Pressure ■ Level ■ Tank content **Measured values for SV** ■ Pressure ■ Temperature
Input values	Input value sent from PLC, can be shown on display

Supported features	■ Identification & Maintenance Simple device identification via control system and nameplate ■ Condensed status[1)] ■ Automatic ident number adaptation and switchable to following ident numbers[1)]: – 9700: Profile-specific transmitter identification number with the "Classic" or "Condensed" status". – 1501: Compatibility mode for the old Cerabar S generation (PMC731, PMP731, PMC631, PMP635). – 1541: Identification number for the new Cerabar S generation (PMC71, PMP71, PMP75). ■ Device locking: The device can be locked by hardware or software.

1) Only with Profile Version 3.02

FOUNDATION Fieldbus

Manufacturer ID	452B48 hex
Device type	1007 hex
Device Revision	■ 6 - SW Version 03.00.zz ■ 7 - SW Version 04.00.zz (FF-912)
DD Revision	■ 3 (Device Revision 6) ■ 2 (Device Revision 7)
CFF Revision	■ 4 (Device Revision 6) ■ 1 (Device Revision 7)
DD Files	Information and files can be found: ■ www.endress.com ■ www.fieldbus.org
CFF Files	
Device Tester Version (ITK Version)	■ 5.0 (Device Revision 6) ■ 6.01 (Device Revision 7)
ITK Test Campaign Number	■ IT054600 (Device Revision 6) ■ IT085500 (Device Revision 7)
Link Master (LAS) capable	yes
Link Master / Basic Device selectable	Yes, default is Basic Device
Node Address	Default: 247 (F7 hex)
Supported features	Field Diagnostics Profile [1)] Following methods are supported: ■ Restart ■ Configure error as warning or alarm ■ HistoROM ■ Peakhold ■ AlarmInfo ■ SensorTrimm
Number of VCRs	■ 44 (Device Revision 6) ■ 24 (Device Revision 7)
Number of Link Objects in VFD	50

1) Only with FF912

Virtual communication references (VCRs)

	Device Revision 6	**Device Revision 7**
Permanent Entries	44	1
Client VCRs	0	0
Server VCRs	5	10
Source VCRs	8	43
Sink VCRs	0	0
Subscriber VCRs	12	43
Publisher VCRs	19	43

Link settings

	Device Revision 6	**Device Revision 7**
Slot time	4	4
Min. inter PDU delay	12	10
Max. response delay	10	10

Transducer Blocks

Block	**Content**	**Output values**
TRD1 Block	Contains all parameters related to the measurement	■ Pressure or level (channel 1) ■ Process temperature (channel 2)
Service Block	Contains service information	■ Pressure after damping (channel 3) ■ Pressure peakhold indicator (channel 4) ■ Counter for max. pressure transgressions (channel 5)
Diagnostic Block	Contains diagnostic information	Error code via DI channels (channel 0 to 16)
Display Block	Contains parameters to configure the onsite display	No output values

Function blocks

Block	Content	Number of blocks	Execution time		Functionality	
			Device Revision 6	Device Revision 7	Device Revision 6	Device Revision 7
Resource Block	The Resource Block contains all the data that uniquely identify the device. It is an electronic version of a nameplate of the device.	1			enhanced	
Analog Input Block 1 Analog Input Block 2	The AI Block receives the measuring data from the Sensor Block, (selectable via a channel number) and makes the data available to other function blocks at its output. Enhancement: digital outputs for process alarms, fail safe mode.	2	45 ms	45 ms [1)]	enhanced	
Digital Input Block	This block contains the discrete data of the Diagnose Block (selectable via a channel number 0 to 16) and provides them for other blocks at the output.	1	40 ms	30 ms	standard	enhanced
Digital Output Block	This block converts the discrete input and thus initiates an action (selectable via a channel number) in the DP Flow Block or in the Service Block. Channel 1 resets the counter for max. pressure transgressions.	1	60 ms	40 ms	standard	enhanced
PID Block	The PID Block serves as a proportional-integral-derivative controller and is used almost universally for closed-loop-control in the field including cascade and feedforward. Input IN can be indicated on the display. The selection is performed in the Display Block (DISPLAY_MAIN_LINE_CONTENT).	1	120 ms	70 ms	standard	enhanced
Arithmetic Block	This block is designed to permit simple use of popular measurement math functions. The user does not have to know how to write equations. The math algorithm is selected by name, chosen by the user for the function to be performed.	1	50 ms	40 ms	standard	enhanced
Input Selector Block	The Input Selector Block facilitates the selection of up to four inputs and generates an output based on the configured action. This block normally receives its inputs from AI Blocks. The block performs maximum, minimum, average and 'first good' signal selection. Inputs IN1 to IN4 can be indicated on the display. The selection is performed in the Display Block (DISPLAY_MAIN_LINE_CONTENT).	1	35 ms	35 ms	standard	enhanced
Signal Characterizer Block	The Signal Characterizer Block has two sections, each with an output that is a non-linear function of the respective input. The non-linear function is generated by a single look-up table with 21 arbitrary x-y pairs.	1	30 ms	40 ms	standard	enhanced
Integrator Block	The Integrator Block integrates a variable as a function of the time or accumulates the counts from a Pulse Input Block. The block may be used as a totalizer that counts up until reset or as a batch totalizer that has a setpoint, where the integrated or accumulated value is compared to pre-trip and trip settings, generating a binary signal when the setpoint is reached.	1	35 ms	40 ms	standard	enhanced
Analog Alarm Block	This block contains all process alarm conditions (working like a comparator) and represents them at the output.	1	35 ms	35 ms	standard	enhanced

Additional function block information:

Instantiate Function Block	YES	YES
Number of additional instantiate blocks	11	5

1) Without trend and alarm reports

Power supply

Electrical connection

Note!
- When using the measuring device in hazardous areas, installation must comply with the corresponding national standards and regulations and the Safety Instructions or Installation or Control Drawings. → 📄 94 ff, "Safety Instructions" and "Installation/Control Drawings" sections.
- Devices with integrated overvoltage protection must be grounded. → 📄 32.
- Protective circuits against reverse polarity, HF influences and overvoltage peaks are installed.

4 to 20 mA HART

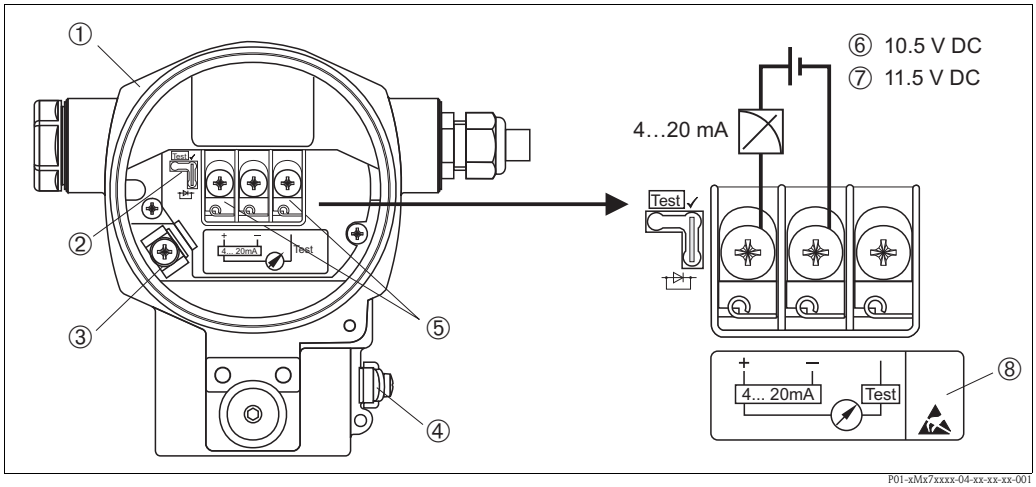

Electrical connection 4 to 20 mA HART

1 Housing
2 Jumper for 4 to 20 mA test signal
→ 📄 20, "Measuring a 4 to 20 mA test signal" section.
3 Internal ground terminal
4 External ground terminal
5 4 to 20 mA test signal between positive and test terminal
6 Minimum supply voltage = 10.5 V DC, jumper is set as illustrated in the diagram.
7 Minimum supply voltage = 11.5 V DC, jumper is set to "Test" position.
8 Devices with integrated overvoltage protection are labeled OVP (overvoltage protection) here (→ 📄 32).

PROFIBUS PA

The digital communication signal is transmitted to the bus via a 2-wire connection. The bus also provides the power supply. For further information on the network structure and grounding, and for further bus system components such as bus cables, see the relevant documentation, e.g. Operating Instructions BA00034S "PROFIBUS DP/PA: Guidelines for planning and commissioning" and the PNO Guideline.

Cable specifications:
- Use a twisted, shielded two-wire cable, preferably cable type A

Note!
For further information on the cable specifications, see Operating Instructions BA00034S "PROFIBUS DP/PA: Guidelines for planning and commissioning", the PNO Guideline 2.092 PROFIBUS PA User and Installation Guideline" and IEC 61158-2 (MBP).

FOUNDATION Fieldbus

The digital communication signal is transmitted to the bus via a 2-wire connection. The bus also provides the power supply. For further information on the network structure and grounding and for further bus system components such as bus cables, see the relevant documentation, e.g. Operating Instructions BA00013S "FOUNDATION Fieldbus Overview" and the FOUNDATION Fieldbus Guideline.

Cable specifications:
- Use a twisted, shielded two-wire cable, preferably cable type A

Note!
For further information on the cable specifications, see Operating Instructions BA00013S "FOUNDATION Fieldbus Overview", FOUNDATION Fieldbus Guideline and IEC 61158-2 (MBP).

Devices with Harting plug Han7D

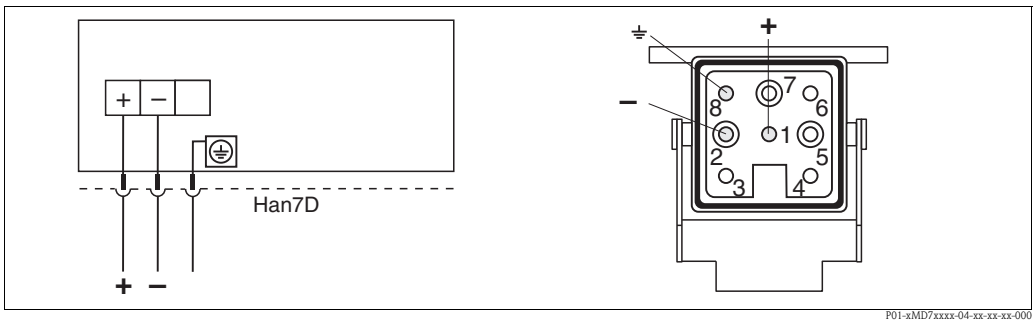

Left: electrical connection for devices with Harting plug Han7D
Right: view of the plug connector at the device

Material: CuZn, gold-plated plug-in jack and plug

Connecting the cable version

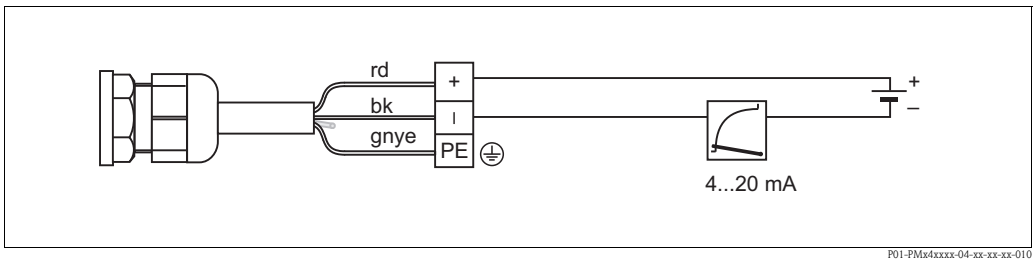

rd = red, bk = black, gnye = green-yellow

Devices with M12 plug

PIN assignment for M12 connector

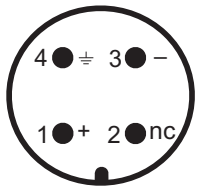

PIN	Meaning
1	Signal +
2	Not assigned
3	Signal –
4	Earth

Endress+Hauser offers the following accessories for devices with an M12 plug:
Plug-in jack M 12x1, straight
- Material: body PA; slotted nut CuZn, nickel-plated
- Degree of protection (fully locked): IP67
- Order number: 52006263

Plug-in jack M 12x1, elbowed
- Material: body PBT/PA; slotted nut GD-Zn, nickel-plated
- Degree of protection (fully locked): IP67
- Order number: 71114212

Cable 4x0.34 mm² (20 AWG) with M12 socket, elbowed, screw plug, length 5 m (16 ft)
- Material: body PUR; slotted nut CuSn/Ni; cable PVC
- Degree of protection (fully locked): IP67
- Order number: 52010285

Devices with 7/8" plug

PIN assignment for 7/8" connector

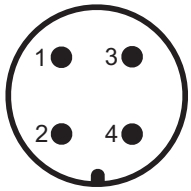

PIN	Meaning
1	Signal –
2	Signal +
3	Not assigned
4	Shield

External thread: 7/8 - 16 UNC
- Material: housing / body CuZn, nickel-plated
- Protection: IP68

Cable gland

Approval	Type	Clamping area
Standard, II1/2G Exia, IS	Plastic M20x1.5	5 to 10 mm (0.2 to 0.39 in)
ATEX II1/2D, II1/3D, II1/2GD Exia, II1GD Exia, II3G Ex nA	Metal M20x1.5 (Ex e)	7 to 10.5 mm (0.28 to 0.41 in)

Terminals

For wire cross-sections of 0.5 to 2.5 mm² (20 to 14 AWG)

Measuring a 4 to 20 mA test signal

A 4 to 20 mA test signal may be measured via the positive and test terminal without interrupting the measurement. The minimum supply voltage of the device can be reduced by simply changing the position of the jumper. As a result, operation is also possible with lower voltage sources. Observe the position of the jumper in accordance with the following table.

Jumper position for test signal	Description
	– Measuring 4 to 20 mA test signal via the plus and test terminal: possible. (Thus, the output current can be measured without interruption via the diode.) – Delivery status – Minimum supply voltage: 11.5 V DC
	– Measuring 4 to 20 mA test signal via the plus and test terminal: not possible. – Minimum supply voltage: 10.5 V DC

Supply voltage

Note!
- When using the measuring device in hazardous areas, installation must comply with the corresponding national standards and regulations and the Safety Instructions or Installation or Control Drawings.
- All explosion protection data are given in separate documentation which is available upon request. The Ex documentation is supplied as standard with all devices approved for use in explosion hazardous areas. → 🗎 94 ff, "Safety Instructions" and "Installation/Control Drawings" sections.

4 to 20 mA HART

Version	Jumper for 4 to 20 mA test signal	Supply voltage
non-hazardous areas	in "Test" position	11.5...45 V DC
	in "Non-test" position	10.5...45 V DC
Intrinsically safe	in "Test" position	11.5 ... 30 V DC
	in "Non-test" position	10.5 ... 30 V DC
■ Other types of protection ■ Devices without certificate	in "Test" position	11.5 ... 45 V DC (Versions with plug-in connection 35 V DC)
	in "Non-test" position	10.5 ... 45 V DC (Versions with plug-in connection 35 V DC)

PROFIBUS PA

- Version for non-hazardous areas: 9 to 32 V DC

FOUNDATION Fieldbus

- Version for non-hazardous areas: 9 to 32 V DC

Current consumption

- PROFIBUS PA: 13 mA ± 1 mA, switch-on current corresponds to IEC 61158-2, Clause 21
- FOUNDATION Fieldbus: 15,5 mA ± 1 mA, switch-on current corresponds to IEC 61158-2, Clause 21

Cable entry

→ 🗎 82 ff, feature 30 "Housing; Cable entry; Protection".

Cable specification

- Endress+Hauser recommends using shielded, twisted-pair two-wire cables.
- Terminals for core cross-sections 0.5 to 2.5 mm^2 (20 to 14 AWG)
- Cable outer diameter: 5 to 9 mm (0.2 to 0.35 in) depends on the used cable gland (→ 🗎 20)

Residual ripple

Without influence on 4 to 20 mA signal up to ± 5 % residual ripple within the permitted voltage range [according to HART hardware specification HCF_SPEC-54 (DIN IEC 60381-1)]

Influence of power supply

≤ 0.0006% of URL/1 V

Performance characteristics – general

Reference operating conditions

- As per IEC 60770
- Ambient temperature T_U = constant, in the range of: +21 to +33 °C (+70 to 91 °F)
- Humidity φ = constant, in the range of: 5 to 80 % rH
- Ambient pressure p_A = constant, in the range of: 860 to 1060 mbar (12.47 to 15.37 psi)
- Position of the measuring cell = constant, in range: horizontally ±1°
- Input of LOW SENSOR TRIM and HIGH SENSOR TRIM for lower range value and upper range value
- Zero based span
- Material of process isolating diaphragm PMC71: Al_2O_3 (aluminum oxide ceramic)
- Material of process isolating diaphragm PMP71 and PMP75: AISI 316L/1.4435
- Filling oil PMP71 and PMP75: silicone oil
- Supply voltage: 24 V DC ± 3 V DC
- Load with HART: 250 Ω

Uncertainty of measurement for small absolute pressure ranges

The smallest extended uncertainty of measurement that can be returned by our standards is:
- 0.4% of the measured value in the range 1 to 30 mbar (0.0145 to 0.435 psi)
- 1% of the measured value in the range < 1 mbar (0.0145 psi)

Long-term stability

PMC71/PMP75:
- For measuring ranges ≥ 1 bar (15 psi): ± 0.05 % of URL/year

PMC71:
- 100 mbar to 40 bar (1.5 psi to 600 psi): ±0.2 % of URL/10 years
- 100 mbar to 40 bar (1.5 psi to 600 psi) (absolute pressure sensor): ±0.3 % of URL/10 years

PMP71 gauge pressure sensors:

	1 year	5 years	10 year
Measuring ranges [bar (psi)]	**% of URL**		
1 (15)	±0.020	±0.080	±0.180
10 (150)	±0.025	±0.050	±0.075
40 (600)	±0.025	±0.075	±0.100
100 (1500)	±0.050	±0.150	±0.200
400 (6000)	±0.050	–	±1

Influence of the installation position

- PMC71 [1]: ≤ 0.18 mbar (3 psi)
- PMP71 [1, 2]
  - Process connections thread G 1 A, G 1 1/2, G 2, 1 1/2 MNPT, 2 MNPT, M 44x1,25, EN/DIN, ANSI and JIS flanges: ≤ 10 mbar (0.15 psi)
  - Process connections thread: G 1/2, 1/2 MNPT, JIS G 1/2, JIS R 1/2, M20x1.5: ≤ 4 mbar (0.06 psi)

1) Device rotated 180°, process connection pointing upwards.
2) The value is doubled for devices with inert oil.

Note!
Position-dependent zero shift can be corrected. → 27, "General installation instructions" section and → 77 ff, "Installation instructions, diaphragm seal systems" section.
Different tightening torques (e.g. for Clamp or Varivent connections) can merely cause a shift in the zero point. This effect is corrected by position adjustment during commissioning.

Performance characteristics – ceramic process isolating diaphragm

Reference accuracy – PMC71

The reference accuracy comprises the non-linearity (terminal based), hysteresis and non-reproducibility as per IEC 60770. The data refer to the calibrated span.

Measuring cell	Gauge pressure sensor	Absolute pressure sensor
100 mbar (1.5 psi)	▪ TD 1:1 to TD 10:1 = ±0.075 ▪ TD > 10:1 = ±0.0075 x TD	▪ TD 1:1 to TD 5:1 = ±0.075 ▪ TD > 5:1 = ±0.015 x TD
250 mbar (3,75 psi)	▪ TD 1:1 to TD 15:1 = ±0.075 ▪ TD > 15:1 = ±0.005 x TD	▪ TD 1:1 to TD 10:1 = ±0.075 ▪ TD > 10:1 = ±0.0075 x TD
400 mbar (6 psi), 1 bar (15 psi), 2 bar (30 psi), 4 bar (60 psi), 10 bar (150 psi)	▪ TD 1:1 to TD 15:1 = ±0.075 ▪ TD > 15:1 = ±0.005 x TD	▪ TD 1:1 to TD 15:1 = ±0.075 ▪ TD > 15:1 = ±0.005 x TD
40 bar (600 psi)	▪ TD 1:1 to TD 10:1 = ±0.075 ▪ TD > 10:1 = ±0.0075 x TD	▪ TD 1:1 to TD 10:1 = ±0.075 ▪ TD > 10:1 = ±0.0075 x TD
Platinum version: 1 bar (15 psi), 2 bar (30 psi), 4 bar (60 psi), 10 bar (150 psi), 40 bar (600 psi)	▪ TD 1:1 = ±0.05	▪ TD 1:1 = ±0.05

Total performance – PMC71

The "Total performance" specification comprises the non-linearity including hysteresis, non-reproducibility as well as the thermal change in the zero point.
For devices with NBR or HNBR seals, the values must be multiplied by a factor of 3.
All specifications apply to the temperature range –10 to +60 °C (+14 to +140 °F) and a turn down of 1:1.

Measuring cell	PMC71	PMC71 high-temperature version
	% of URL	
100 mbar (1.5 psi), 250 mbar (3,75 psi), 400 mbar (6 psi)	±0.2	±0.46
1 bar (15 psi), 2 bar (30 psi), 4 bar (60 psi), 10 bar (150 psi), 40 bar (600 psi)	±0.15	±0.46

Total error - PMC71

The total error comprises the long-term stability and the total performance.
For devices with NBR or HNBR seals, the values must be multiplied by a factor of 3.
All specifications apply to the temperature range –10 to +60 °C (+14 to +140 °F) and a turn down of 1:1.

Measuring cell	PMC71	PMC71 high-temperature version
	% of URL/year	
100 mbar (1.5 psi), 250 mbar (3,75 psi), 400 mbar (6 psi)	±0.25	±0.51
1 bar (15 psi), 2 bar (30 psi), 4 bar (60 psi), 10 bar (150 psi), 40 bar (600 psi)	±0.2	±0.51

Warm-up period – PMC71

- 4 to 20 mA HART: < 10 s
- PROFIBUS PA: 6 s
- FOUNDATION Fieldbus: 50 s

Thermal change of the zero output and the output span – PMC71

PMC71

Measuring cell	–10 to +60°C (+14 to +140 °F)	–20 to –10 °C, +60 to +125 °C (–4 to +14°F, +140 to +257°F)
	% of the set span	
100 mbar (1.5 psi), 250 mbar (3,75 psi), 400 mbar (6 psi)	±(0.088 x TD + 0.088)	±(0.138 x TD + 0.138)
1 bar (15 psi), 2 bar (30 psi), 4 bar (60 psi), 10 bar (150 psi), 40 bar (600 psi)	±(0.088 x TD + 0.04)	±(0.175 x TD + 0.075)

PMC71 high-temperature version

Gauge pressure measuring cell	–10 to +60°C (+14 to +140°F)	to +150°C (to +302°F)
	% of the set span	
100 mbar (1.5 psi), 250 mbar (3,75 psi), 400 mbar (6 psi)	±(0.088 x TD + 0.088)	±(0.75 x TD)
1 bar (15 psi), 2 bar (30 psi), 4 bar (60 psi), 10 bar (150 psi), 40 bar (600 psi)	±(0.088 x TD + 0.040)	±(0.50 x TD)
Absolut pressure measuring cell		
100 mbar (1.5 psi)	±(0.088 x TD + 0.088)	±(1.25 x TD)
250 mbar (3,75 psi), 400 mbar (6 psi)	±(0.088 x TD + 0.088)	±(0.75 x TD)
1 bar (15 psi), 2 bar (30 psi), 4 bar (60 psi), 10 bar (150 psi)	±(0.088 x TD + 0.040)	±(0.75 x TD)
40 bar (600 psi)	±(0.088 x TD + 0.040)	±(0.50 x TD)

Performance characteristics – metallic process isolating diaphragm

Reference accuracy – PMP71, PMP75

The reference accuracy comprises the non-linearity (terminal based), hysteresis and non-reproducibility as per IEC 60770. The data refer to the calibrated span.

Measuring cell	Sensor	PMP71 and PMP75 without capillary	PMP75 with capillary
400 mbar (6 psi)	Gauge pressure/ absolute pressure	▪ TD 1:1 = ±0.15 ▪ TD > 1:1 = ±0.15 x TD	▪ TD 1:1 = ±0.15 ▪ TD > 1:1 = ±0.15 x TD
1 bar (15 psi)	Gauge pressure/ absolute pressure	▪ TD 1:1 to TD 2.5:1 = ±0.075 ▪ TD > 2.5:1 = ±0.03 x TD	▪ TD 1:1 to TD 2.5:1 = ±0.1 ▪ TD > 2.5:1 = ±0.04 x TD
2 bar (30 psi)	Gauge pressure	▪ TD 1:1 to TD 5:1 = ±0.075 ▪ TD > 5:1 = ±0.015 x TD	▪ TD 1:1 to TD 2.5:1 = ±0.1 ▪ TD > 2.5:1 = ±0.04 x TD
2 bar (30 psi)	Absolute pressure	▪ TD 1:1 to TD 5:1 = ±0.075 ▪ TD > 5:1 = ±0.015 x TD	▪ TD 1:1 to TD 5:1 = ±0.075 ▪ TD > 5:1 = ±0.015 x TD
4 bar (60 psi)	Gauge pressure/ absolute pressure	▪ TD 1:1 to TD 10:1 = ±0.075 ▪ TD > 10:1 = ±0.0075 x TD	▪ TD 1:1 to TD 10:1 = ±0.075 ▪ TD > 10:1 = ±0.0075 x TD
10 bar (150 psi), 40 bar (600 psi)	Gauge pressure/ absolute pressure	▪ TD 1:1 to TD 15:1 = ±0.075 ▪ TD > 15:1 = ±0.005 x TD	▪ TD 1:1 to TD 15:1 = ±0.075 ▪ TD > 15:1 = ±0.005 x TD
100 bar (1500 psi)	Gauge pressure/ absolute pressure	▪ TD 1:1 to TD 10:1 = ±0.075 ▪ TD > 10:1 = ±0.0075 x TD	▪ TD 1:1 to TD 10:1 = ±0.075 ▪ TD > 10:1 = ±0.0075 x TD
400 bar (6000 psi)	Gauge pressure/ absolute pressure	▪ TD 1:1 to TD 5:1 = ±0.15 ▪ TD > 5:1 = ±0.03 x TD	▪ TD 1:1 to TD 5:1 = ±0.15 ▪ TD > 5:1 = ±0.03 x TD
700 bar (10500 psi)	Absolute pressure	▪ TD 1:1 to TD 5:1 = ±0.15 ▪ TD > 5:1 = ±0.03 x TD	—
Platinum version [1)] 1 bar (15 psi), 2 bar (30 psi), 4 bar (60 psi), 10 bar (150 psi), 40 bar (600 psi), 400 bar (6000 psi), 700 bar (10500 psi)	Gauge pressure/ absolute pressure	▪ TD 1:1 = ±0.05	—

1) Platinum version not for flush-mounted process connections G 1/2 and M20.

Total performance – PMP71

The "Total performance" specification comprises the non-linearity including hysteresis, non-reproducibility as well as the thermal change of the zero point.
All specifications apply to the temperature range –10 to +60 °C (+14 to +140 °F) and a turn down of 1:1.

Measuring cell	PMP71	PMP71 with gold-rhodium-coated process isolating diaphragm
	% of URL	
400 mbar (6 psi)	±0.25	±1.25
1 bar (15 psi)	±0.15	±0.75
2 bar (30 psi)	±0.15	±0.45
4 bar (60 psi)	±0.15	±0.3
10 bar (150 psi), 40 bar (600 psi)	±0.15	±0.15
100 bar (1500 psi)	±0.25	±0.25
400 bar (6000 psi)	±0.3	±0.3
700 bar (10500 psi)	±0.3	±0.3

Total error - PMP71

The total error comprises the total performance and long-term stability.
All specifications apply to the temperature range –10 to +60 °C (+14 to +140 °F) and a turn down of 1:1.

Measuring cell	% of URL/year
400 mbar (6 psi)	■ ±0,3
1 bar (15 psi), 2 bar (30 psi), 4 bar (60 psi), 10 bar (150 psi), 40 bar (600 psi)	■ ±0.2
100 bar (1500 psi)	■ ±0.3
400 bar (6000 psi)	■ ±0.35
700 bar (10500 psi)	■ ±0.35

Warm-up period – PMP71, PMP75

- 4 to 20 mA HART: < 10 s
- PROFIBUS PA: 6 s
- FOUNDATION Fieldbus: 50 s

Thermal change of the zero output and the output span – PMP71 and PMP75

Note!
When using a PMP75, the influence from the respective diaphragm seal must be taken into account.
(→ 🗎 75 ff "Planning instructions, diaphragm seal systems".

PMP71 and PMP75 (basic device), internal process isolating diaphragm

Measuring cell	Material of the process isolating diaphragm		–10 to +60°C (+14 to +140 °F)	–40 to –10 °C, +60 to +85 °C (–40 to +14 °F, +140 to +185 °F)
	316 L	Gold-rhodium	% of the set span	
400 mbar (6 psi)	x	x	±(0.2 x TD + 0.015)	±(0.4 x TD + 0.03)
1 bar (15 psi), 2 bar (30 psi), 4 bar (60 psi), 10 bar (150 psi)	x	x	±(0.1 x TD + 0.01)	±(0.4 x TD + 0.02)
40 bar (600 psi)	x	-	±(0.1 x TD + 0.01)	±(0.4 x TD + 0.02)
100 bar (1500 psi)	x	-	±(0.2 x TD + 0.015)	±(0.4 x TD + 0.03)
400 bar (6000 psi)	x	-	±(0.35 x TD + 0.02)	±(0.7 x TD + 0.04)
700 bar (10500 psi)	x	-	±(0.4 x TD + 0.03)	±(0.7 x TD + 0.04)

PMP71, flush-mounted process isolating diaphragm made of 316L with gold-rhodium coating

Measuring cell	–10 to +60°C (+14 to +140 °F)	–40 to –10 °C, +60 to +85 °C (–40 to +14 °F, +140 to +185 °F)
	% of the set span	
400 mbar (6 psi)	±(0.2 x TD + 0.015) x 5	±(0.4 x TD + 0.03) x 5
1 bar (15 psi), 2 bar (30 psi), 4 bar (60 psi), 10 bar (150 psi), 40 bar (600 psi)	±(0.1 x TD + 0.01) x 5	±(0.4 x TD + 0.02) x 5
100 bar (1500 psi)	±(0.2 x TD + 0.015) x 5	±(0.4 x TD + 0.03) x 5
400 bar (6000 psi)	±(0.35 x TD + 0.02) x 5	±(0.7 x TD + 0.04) x 5
700 bar (10500 psi)	±(0.4 x TD + 0.03) x 5	±(0.7 x TD + 0.04) x 5

Operating conditions (Installation)

General installation instructions

- For PMP75: See → 🗎 77, "Installation instructions" section.
- The position-dependent zero point shift can be corrected directly at the device via operating keys, and also in hazardous areas in the case of devices with external operation. Diaphragm seals also shift the zero point, depending on the installation position
  (→ See also → 🗎 77, "Installation instructions" section).
- The housing of the Cerabar S can be rotated 380°. See → 🗎 29, "Turning the housing" section.
- Endress+Hauser offers a mounting bracket for installing the device on pipes or walls.
  → See also → 🗎 28, "Wall and pipe-mounting" section.
- Use flushing rings for flange and cell diaphragm seals if buildup or clogging can be expected at the diaphragm seal connection. The flushing ring can be fitted between the process connection and diaphragm seal. Material buildup in front of the process isolating diaphragm can be flushed away, and the pressure chamber vented, via the two lateral flushing holes.

Measuring arrangement for devices without diaphragm seals – PMC71, PMP71

Cerabar S transmitters without diaphragm seals are mounted as per the norms for a manometer (DIN EN 837-2). We recommend the use of shutoff devices and siphons. The orientation depends on the measuring application.

Pressure measurement in gases

- Mount Cerabar S with shutoff device above the tapping point so that any condensate can flow into the process.

Pressure measurement in steams

- Mount Cerabar S with siphon above the tapping point.
  The siphon reduces the temperature to almost the ambient temperature.
- Fill the siphon with liquid before commissioning.

Pressure measurement in liquids

- Mount Cerabar S with shutoff device below or at the same level as the tapping point.

Level measurement

- Mount Cerabar S below the lowest measuring point.
- Do not mount the device at the following positions:
  In the filling curtain, in the tank outlet or at a point in the container which could be affected by pressure pulses from an agitator or a pump.
- The adjustment and functional test can be carried out more easily if you mount the device downstream of a shutoff device.

Heat insulation – PMC71 high-temperature version

The PMC71 high-temperature version must only be insulated up to a certain height. The maximum permitted insulation height is indicated on the devices and applies to an insulation material with a heat conductivity ≤ 0.04 W/(m x K) and to the maximum permitted ambient and process temperature (→ see table below). The data were determined under the most critical application "quiescent air".

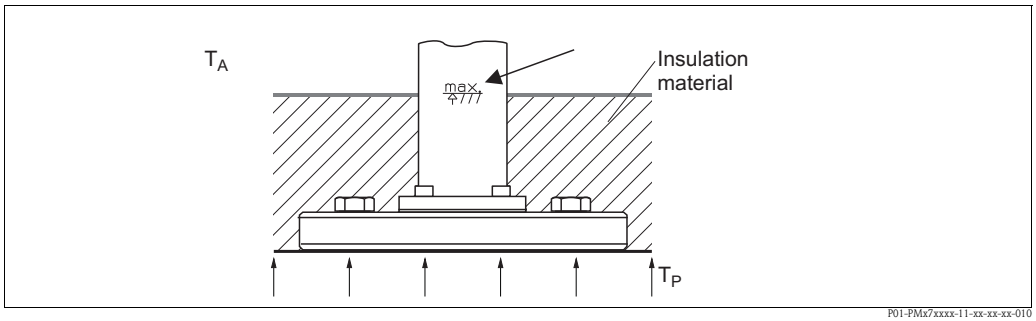

Maximum insulation height, here indicated on a PMC71 with a flange

	PMC71 high-temperature version
Ambient temperature (T_A)	≤ 70 °C (158 °F)
Process temperature (T_P)	≤ 150 °C (302 °F)

Measuring arrangement for devices with diaphragm seals – PMP75

- See → 🗎 75, "Planning instructions, diaphragm seal systems" section.

Wall and pipe-mounting

Endress+Hauser offers a mounting bracket for installing the device on pipes or walls.
See also → 🗎 82 ff, feature 110, "Additional option 2" or separate accessory (part number: 71102216).
For the dimensions, see → 🗎 65.

"Separate housing" version

With the "separate housing" version, you are able to mount the housing with the electronics insert at a distance from the measuring point. This version facilitates trouble-free measurement:
- Under particularly difficult measuring conditions (at installation locations that are cramped or difficult to access)
- If rapid cleaning of the measuring point is required
- If the measuring point is exposed to vibrations
- For compact installations

You can choose between different cable versions:
- PE (2 m (6.6 ft), 5 m (16 ft) and 10 m (33 ft))
- FEP (5 m (16 ft)).

→ 🗎 85 ff, feature 110, "Additional option 2", version "G".

For the dimensions, → 🗎 65.

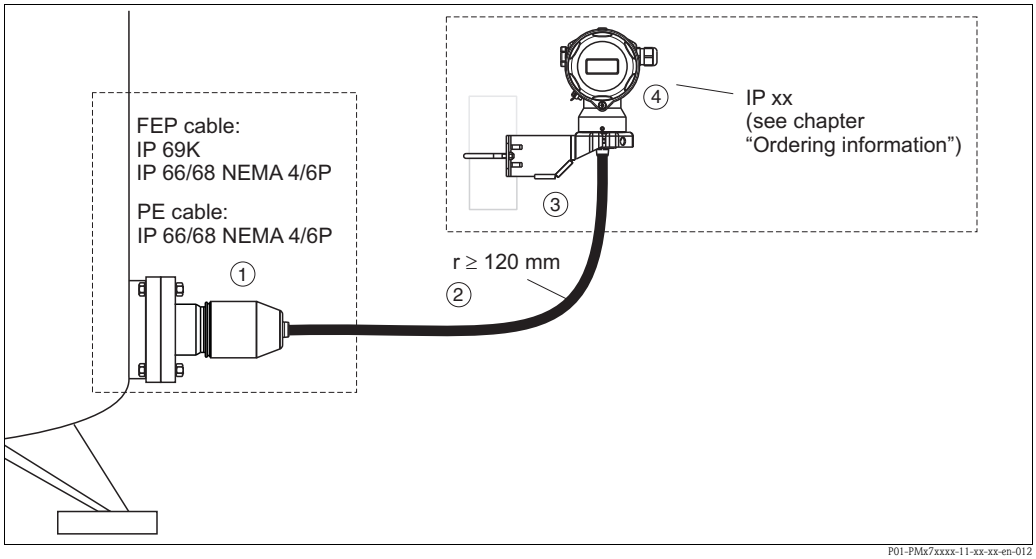

P01-PMx7xxxx-11-xx-xx-en-012

In the case of the "separate housing" version, the sensor is delivered with the process connection and cable ready mounted. The housing and a mounting bracket are enclosed as separate units. The cable is provided with a socket at both ends. These sockets are simply connected to the housing and the sensor.

1 Process connection with sensor
2 Cable, both ends are fitted with a socket
3 Mounting bracket provided, suitable for pipe and wall mounting
4 Housing with electronic insert

Degree of protection for the process connection and sensor with the use of
- FEP cable:
  - IP 69K
  - IP 66 NEMA 4/6P
  - IP 68 (1.83 mH_2O for 24 h) NEMA 4/6P
- PE cable:
  - IP 66 NEMA 4/6P
  - IP 68 (1.83 mH_2O for 24 h) NEMA 4/6P

Technical data of the PE and FEP cable:
- Minimum bending radius: 120 mm (4.72 in)
- Cable extraction force: max. 450 N (101 lbf)
- Resistance to UV light

Use in hazardous area:
- Intrinsically safe installations (Ex ia/IS)
- FM/CSA IS: for Div. 1 installation only

Reduction of the installation height

If the separate housing is used, the installation height of the process connection is reduced compared to the dimensions of the standard version.

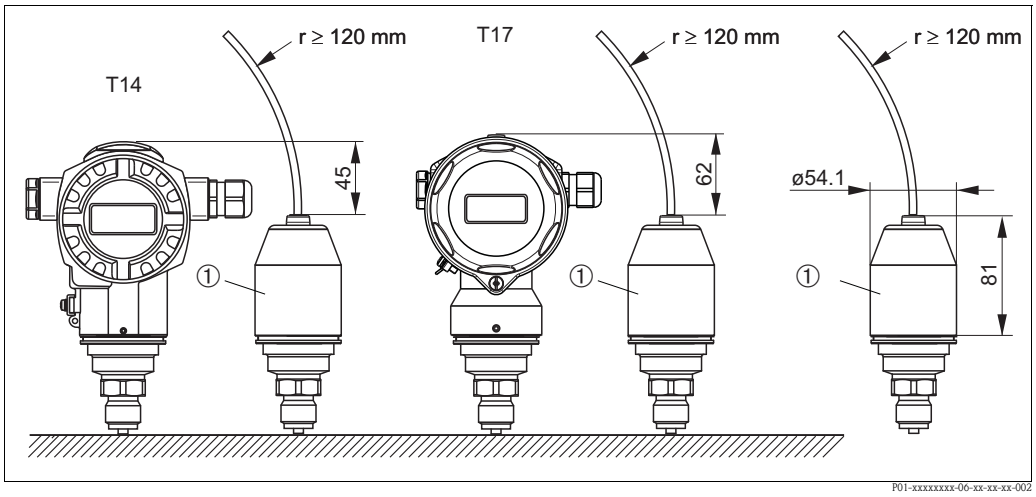

Reduction of the installation height of the process connection when using the separate housing.
1 Process connection adapter.

Turning the housing

The housing can be rotated 380° by loosening the Allen screw.

Your benefits
- Simple mounting by optimally aligning the housing
- Good, accessible device operation
- Optimum readability of the onsite display (optional).

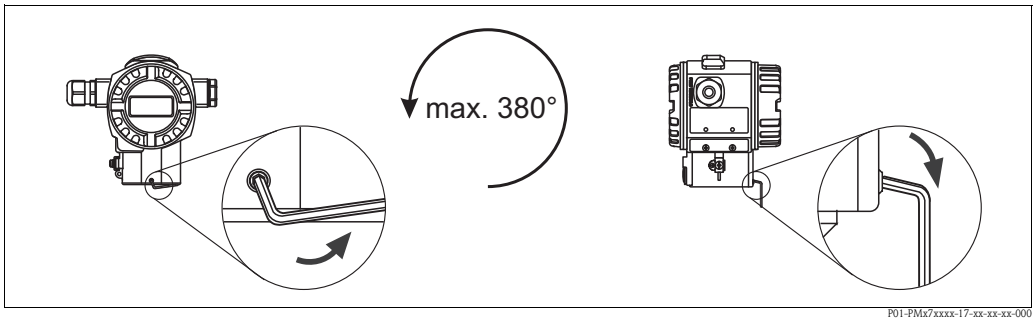

Aligning the housing by releasing the setscrew
T14 housing: 2 mm (0.08 in) Allen screw; T17 housing: 3 mm (0.12 in) Allen screw

Oxygen applications

Oxygen and other gases can react explosively to oils, grease and plastics, such that, among other things, the following precautions must be taken:
– All components of the system, such as measuring devices, must be cleaned in accordance with the BAM (DIN 19247) requirements.
– Dependent on the materials used, a certain maximum temperature and a maximum pressure for oxygen applications must not be exceeded.

The devices suitable for gaseous oxygen applications are listed in the following table with the specification p_{max}.

Order code for devices [1] cleaned for oxygen applications	p_{max} for oxygen applications	T_{max} for oxygen applications
PMC71 – * * * ** * ** 2 * *, Devices with sensors, nominal value < 10 bar (150 psi)	Over pressure limit (OPL) of sensor[2), 3)]	60 °C (140 °F)
PMC71 – * * * ** * ** 2 * *, Devices with sensors, nominal value ≥ 10 bar (150 psi)	30 bar (450 psi)	60 °C (140 °F)
PMP71 – * * * ** * * ** N * *	Dependent on the lowest-rated element, with regard to pressure, of the selected components: over pressure limit (OPL) of the sensor[1)], process connection (1.5 x PN) or fill fluid (160 bar (2400 psi))	85 °C (185 °F)
PMP75 – * * * ** * * * ** N * *	Dependent on the lowest-rated element, with regard to pressure, of the selected components: over pressure limit (OPL) of the sensor[1)], process connection (1.5 x PN) or fill fluid (160 bar (2400 psi))	85 °C (185 °F)

1) Only devices, not accessories or enclosed accessories.

2) → 🗎 82 ff "Ordering information", feature 40 "Sensor range; Sensor over pressure limit (= OPL)

3) PMC71 with PVDF thread or flange: Only mount with a mounting bracket. MWP 10 bar (150 psi), OPL max. 15 bar (225 psi). Process temperature range –10...+60 °C (+14...+140 °F) Max.: 15 bar (225 psi), –10 to +60 °C (+14 to +140 °F)

Silicone-free applications

Special cleaning of the transmitter to remove paint-wetting substances, for use in paint shops → 🗎 84 "Ordering information PMC71", feature 80 "Seal", version "L" and "M".

Ultrapure gas applications

Endress+Hauser also offers devices for special applications, such as ultrapure gas, cleaned from oil and grease. No special restrictions regarding the process conditions apply to these devices.

→ 🗎 82, "Ordering information PMC71", feature 80 "Seal" or → 🗎 88, "Ordering information PMP71", feature 90 "Fill fluid".

Applications with hydrogen

With regard to materials in which hydrogen formation takes place, hydrogen atoms can diffuse through the metallic process isolating diaphragm. This can result in incorrect measurement results.
Endress+Hauser offers process isolating diaphragms with gold-rhodium coating for this application.

→ 🗎 86 "Ordering information PMP71" and → 🗎 89 "Ordering information PMP75", feature 60 "Membrane material" version "6".

Operating conditions (Environment)

Ambient temperature range

Version	PMC71 high-temperature version	PMC71	PMP71 [1]	PMP75 [1]
Without LCD display	–20 to +70 °C (-4 to +158 °F)	–40 to +85 °C (-40 to +185 °F)		
With LCD display [2]		–20 to +70 °C (-4 to +158 °F)		
With M12 connector, elbowed		-25 to +85 °C (-13 to +185 °F)		
With separate housing	–20 to +50 °C (-4 to +122 °F) (installation without insulation)			—
Diaphragm seal systems	—	—	—	→ 75
MID parts certificate	—	—	–25 to +55 °C (-13 to +131 °F)	—

1) Lower temperatures on request

2) Extended temperature application range (-40 °C to +85 °C (-40 °F to +185 °F)) with restrictions in optical properties such as display speed and contrast

Note!
For high-temperature applications, either a PMP75 with a temperature isolator or with a capillary can be used. If vibrations also occur in the application, Endress+Hauser recommends using a PMP75 with a capillary. If a PMP75 with a temperature isolator or capillary is used, we recommend a suitable retaining unit for mounting (see "Wall and pipe-mounting" section on → 28).

For devices for use in hazardous areas, see Safety Instructions, Installation or Control Drawing. (→ 94 ff, "Safety Instructions" and "Installation/Control Drawings" sections)

Storage temperature range

- –40 to +90 °C (-40 to +194 °F)
- Onsite display: –40 to +85 °C (-40 to +185 °F)
- Separate housing: -40 to +60 °C (-40 to +140 °F)

Degree of protection

- → See Page 82 ff, feature 30 "Housing; Cable entry; Protection".
- Degree of protection IP 68 for T17 housing: 1.83 mH_2O for 24 h
- Separate housing → 28

Climate class

Class 4K4H (air temperature: –20 to +55 °C (-4 to +131 °F), relative humidity: 4 to 100 %) fulfilled as per DIN EN 60721-3-4 (condensation possible. With PMC71, avoid condensate in the device).

Vibration resistance

Device/accessory	Test standard	Vibration resistance
PMC71 [1]	GL	Guaranteed for 3 to 25 Hz: ±1.6 mm (0.063 in); 25 to 100 Hz: 4 g in all 3 planes
PMP71		
PMP75 [2], [3]		
With mounting bracket	IEC 61298-3	Guaranteed for 10 to 60 Hz: ±0.15 mm (0.0059 in); 60 to 500 Hz: 2 g in all 3 planes
PMP71 with MID parts certificate	OIML R117-1	Class M3

1) Not for high-temperature version with Ex d[ia], CSA XP or FM XP

2) With aluminum T14 housing only

3) For high-temperature applications, either a PMP75 with a temperature isolator or with a capillary can be used. If vibrations also occur in the application, Endress+Hauser recommends using a PMP75 with a capillary. If a PMP75 with a temperature isolator or capillary is used, it must be mounted with a mounting bracket (→ 28).

Electromagnetic compatibility

- Electromagnetic compatibility to EN 61326 and NAMUR recommendation EMC (NE21). For details refer to the Declaration of Conformity.
- With enhanced immunity against electromagnetic fields as per EN 61000-4-3: 30 V/m with closed cover [1]
- Maximum deviation: < 0.5 % of span
- All EMC measurements were performed with a turn down (TD) = 2:1.
- Class E3 as per OIML R75-2

1) For devices with T14 housing

Overvoltage protection (optional)

- Overvoltage protection:
  - Nominal functioning DC voltage: 600 V
  - Nominal discharge current: 10 kA
- Surge current check î = 20 kA as per DIN EN 60079-14: 8/20 µs satisfied
- Arrester AC current check I = 10 A satisfied

→ 82 ff, feature 100 "Additional option 1" and feature 110 "Additional option 2", version "M Overvoltage protection".

Note!
Devices with integrated overvoltage protection must be grounded.

Operating conditions (Process)

Process temperature limits

PMC71 (with ceramic process isolating diaphragm)

- –25 to +125 °C (–13 to +257 °F)
- High-temperature version: –20 to +150 °C (–4 to +302 °F); → 82, feature 100 "Additional option 1", version "T".
- With applications involving saturated steam, a Cerabar S with a metallic process isolating diaphragm must be used, or a siphon for temperature isolation should be provided during installation.
- Observe the process temperature range of the seal in the following table.

Versions for feature 80 in the order code	Seal	Process temperature range
A, L	FKM Viton	–25 to +125 °C/150 °C (-13 to +257 °F/302 °F) 1)
B 2)	EPDM (FDA 21CFR177.2600; 3A Class II; USP Class VI) DVGW (KTW, W270, W534), WRAS, ACS, NSF61	–20 to +125 °C/150 °C (-4 to +257 °F/302 °F) 1)
B	EPDM	–20 to +150 °C (-4 to +302 °F)
D, M	Kalrez, Compound 4079	+5 to +125 °C/150 °C (+41 to +257 °F/302 °F) 1)
E	Chemraz, Compound 505	–10 to +125 °C/150 °C (+14 to +257 °F/302 °F) 1)
F 2)	HNBR (FDA 21CFR177.2600; 3A Class II; KTW; AFNOR; BAM)	–25 to +125 °C (-13 to +257 °F
F	NBR	–10 to +100 °C (+14 to +212 °F)
G	FKM Viton, FDA 21CFR177.2600	–5 to +125 °C (+23 to +257 °F)
1	FKM Viton, cleaned from oil and grease	–10 to +125 °C/150 °C (14 to +257 °F/302 °F) 1)
2	FKM Viton, cleaned for oxygen service	–10 to +60 °C (+14 to +140 °F)
The process temperature ranges specified here refer to permanent application of the PMC71. They may be exceeded for a short time (e.g. for cleaning).		

1) 150 °C (302 °F): for high-temperature version

2) These seals are used for devices with 3A-approved process connections.

Applications with jumps in temperature

Extreme jumps in temperature can result in temporary measuring errors. Temperature compensation takes effect after several minutes. Internal temperature compensation is faster the smaller the jump in temperature and the longer the time interval involved.
For further information please contact your local Endress+Hauser Sales Center.

PMP71 (with metallic process isolating diaphragm)

Description	Temperature operating range
Process connections with internal process isolating diaphragm	–40 to +125 °C (-40 to +257 °F) (+150 °C (302 °F) for max. one hour)
Process connections with flush-mounted process isolating diaphragm, G 1 A, G 1 1/2 A, G 2 A, 1 NPT, 1 1/2 NPT, 2 NPT, M 44 x 1.25, EN/DIN, ANSI and JIS flanges	–40 to +100 °C (-40 to +212 °F)
Process connections with flush-mounted process isolating diaphragm, G 1/2 A, M20x1.5	–20 to +85 °C (-4 to 185 °F)

PMP71 (with metallic process isolating diaphragm) with MID parts certificate

–25 to +55 °C (-13 to +131 °F)

PMP75 (with diaphragm seal)

- Depending on the diaphragm seal and filling oil from -70 °C (-94 °F) to +400 °C (+752 °F). Observe the temperature application limits → 🗎 75.

Note!
- The PTFE foil used is designed to protect the unit against abrasion. It does not provide protection against corrosive media.
- Do not use diaphragm seals with 0.25 mm (0.01 in) PTFE foil on AISI 316L (1.4435/1.4404) for vacuum applications, upper temperature limit +204 °C (+399 °F).
- For oxygen applications, observe → 🗎 30, "Oxygen applications" section.

Pressure specifications

- The maximum pressure for the measuring device depends on the lowest-rated element with regard to pressure.
  See the following sections:
  – → 🗎 7 ff, "Measuring range" section
  – "Mechanical construction" section.
  The MWP (maximum working pressure) is specified on the nameplate. This value refers to a reference temperature of 20°C (68°F), or 100°F (38 °C) for ANSI flanges, and may be applied to the device for an unlimited time. Observe the temperature dependency of the MWP.
- The pressure values permitted at higher temperatures can be found in the following standards:
  – EN 1092-1: 2001 Tab. 18 [1]
  – ASME B 16.5a – 1998 Tab. 2-2.2 F316
  – ASME B 16.5a – 1998 Tab. 2.3.8 N10276
  – JIS B 2220
- The test pressure corresponds to the over pressure limit of the device (OPL = 1.5 x MWP [2]) and may be applied for only a limited time period in order to avoid permanent damage.
- The Pressure Equipment Directive (EC Directive 97/23/EC) uses the abbreviation "PS". The abbreviation "PS" corresponds to the MWP (maximum working pressure) of the measuring device.
- In the case of sensor range and process connections where the over pressure limit (OPL) of the process connection is smaller than the nominal value of the sensor, the device is set at the factory, at the very maximum, to the OPL value of the process connection. If you want to use the entire sensor range, select a process connection with a higher OPL value (1.5 x PN; MWP = PN).
- In oxygen applications, the values for "p_{max} and T_{max} for oxygen applications" as per → 🗎 30, "Oxygen applications" may not be exceeded.

1) With regard to their stability-temperature property, the materials 1.4435 and 1.4404 are grouped together under 13EO in EN 1092-1: 2001 Tab. 18. The chemical composition of the two materials can be identical.
2) The equation does not apply for PMP71 and PMP75 with a 40 bar (600 psi) or 100 bar (1500 psi) measuring cell.

Mechanical construction

Dimensions of T14 housing, optional display on the side

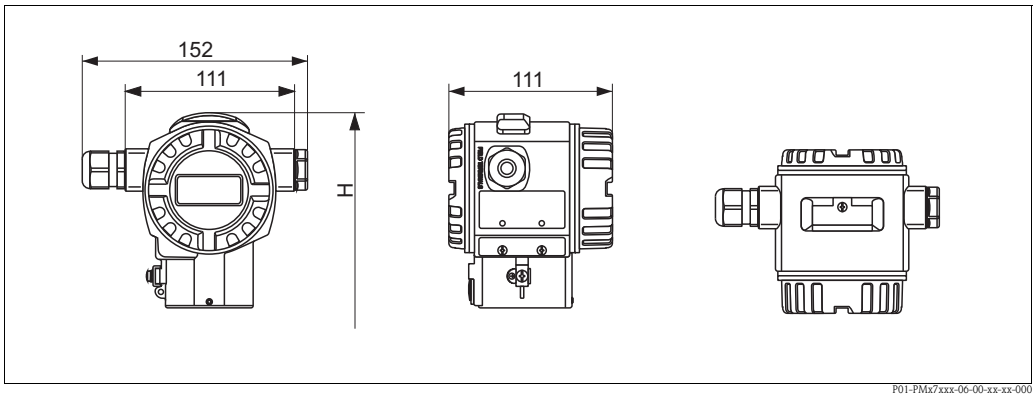

Front view, left-hand side view, top view
→ Installation height H, see process connection in question. Housing weight → 📄 65.

Note!
For custody transfer applications, the cover clamp screws have to be locked with seal wire.

Dimensions of T17 housing (hygienic), optional display on the side

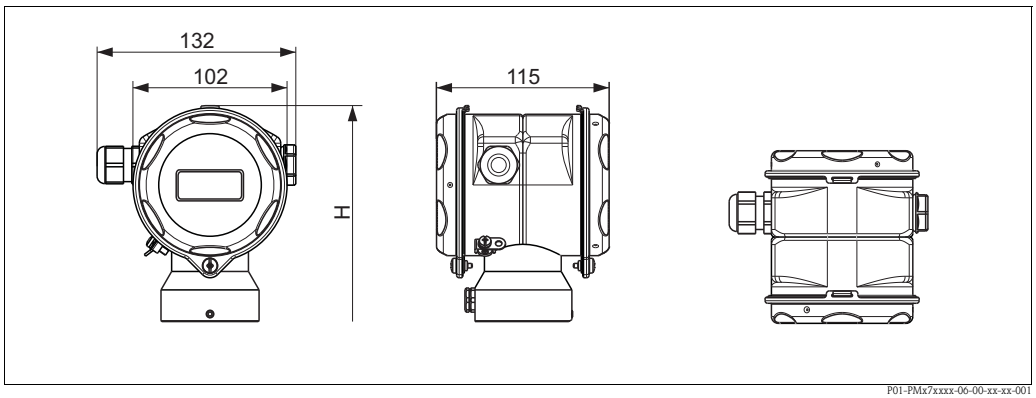

Front view, left-hand side view, top view
→ Installation height H, see process connection in question. Housing weight → 📄 65.

Note!
For custody transfer applications, the cover clamp screws have to be locked with seal wire.

Process connections PMC71 (with ceramic process isolating diaphragm)

Thread, internal process isolating diaphragm

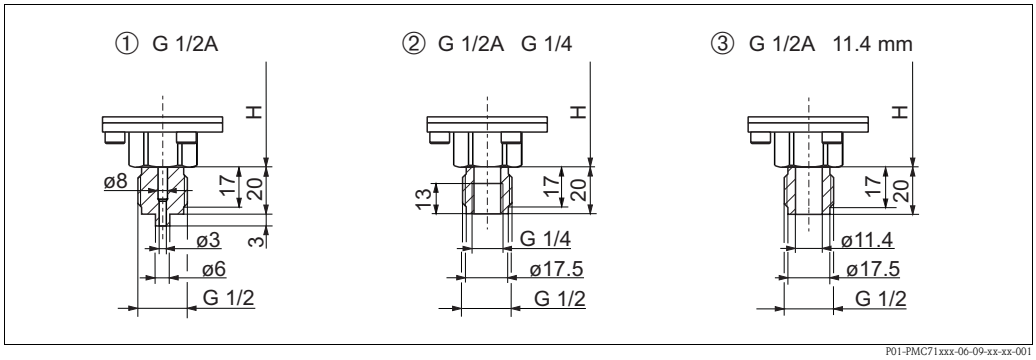

Process connections PMC71, thread ISO 228
Installation height → 37.

1 *Thread ISO 228 G 1/2 A EN 837;*
Material version GA: AISI 316L, version GB: Alloy C276, version GC: Monel,
version GD: PVDF (MWP 10 bar (150 psi), OPL max. 15 bar (225 psi), Process temperature range –10 to +60 °C/ +14 to +140 °F), only mount version "GD" with a mounting bracket (→ see also Page 28); weight: 0.63 kg (1.39 lbs)
2 *Thread ISO 228 G 1/2 A G 1/4 (female);*
Material version GE: AISI 316L, version GF: Alloy C276, version GG: Monel;
Weight: 0.63 kg (1.39 lbs)
3 *Thread ISO 228 G 1/2 A hole 11.4 mm;*
Material version GH: AISI 316L, version GJ: Alloy C276, version GK: Monel;
Weight: 0.63 kg (1.39 lbs)

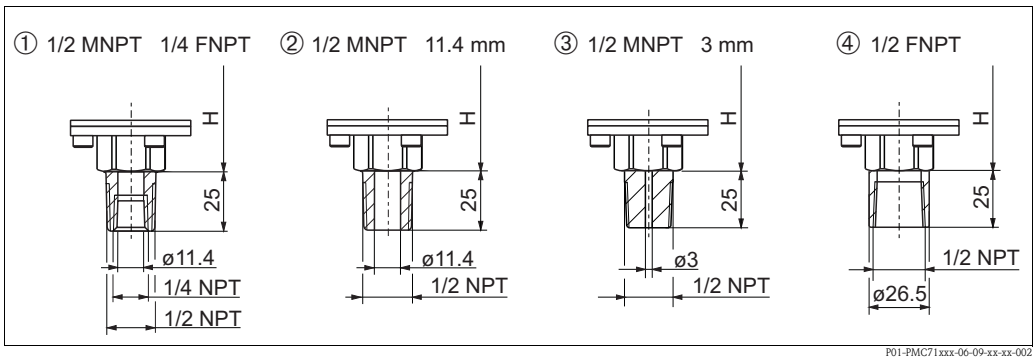

Process connections PMC71, thread ANSI
Installation height → 37.

1 *Thread ANSI 1/2 MNPT 1/4 FNPT;*
Material version RA: AISI 316L, version RB: Alloy C276, version RC: Monel;
Weight: 0.63 kg (1.39 lbs)
2 *Thread ANSI 1/2 MNPT hole 11.4 (0.45 in);*
Material version RD: AISI 316L, version RE: Alloy C276, version RF: Monel;
Weight: 0.63 kg (1.39 lbs)
3 *Thread ANSI 1/2 MNPT hole 3 mm (0.12 in);*
Material version RG: PVDF (MWP 10 bar (150 psi), OPL max. 15 bar (225 psi), Process temperature range –10 to +60 °C/+14 to +140 °F) - only mount with a mounting bracket (→ 28); Weight: 0.63 kg (1.39 lbs)
4 *Thread ANSI 1/2 FNPT;*
Material version RH: AISI 316L, version RJ: Alloy C276, version RK: Monel;
Weight: 0.63 kg (1.39 lbs)

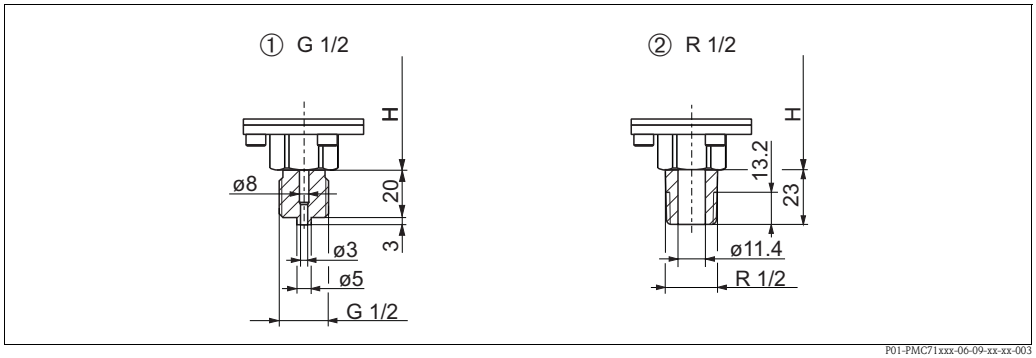

Process connections PMC71, thread JIS
Installation height H → 🗎 37.

1 Version GL: thread JIS B0202 G 1/2 (male), material: AISI 316L; weight: 0.63 kg (1.39 lbs)
2 Version RL: thread JIS B0203 R 1/2 (male), material: AISI 316L; weight: 0.63 kg (1.39 lbs)

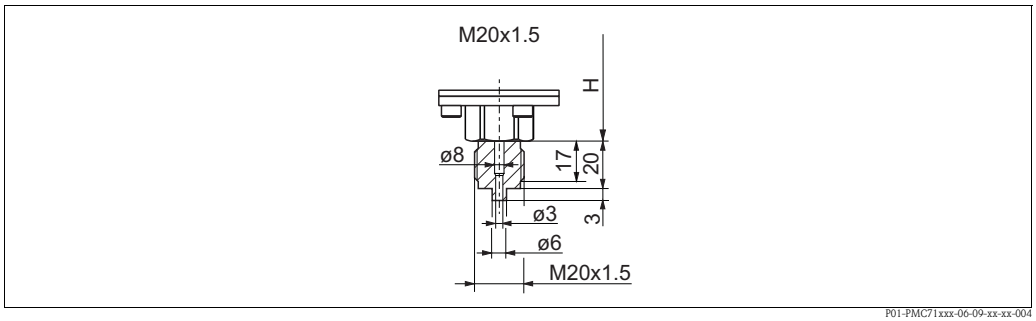

Process connections PMC71 thread DIN 13 M 20x1.5 hole 3 mm (0.12 in)
Material version GP: AISI 316L, version GQ: Alloy C276; weight: 0.63 kg (1.39 lbs)
Installation height H → 🗎 37.

Installation height H for devices with threaded connection and internal process isolating diaphragm

Description	T14 housing	T17 housing
PMC71	155 mm (6.1 in)	171 mm (6.73 in)
PMC71 with Ex d[ia], CSA XP or FM XP	225 mm (8.86 ft)	241 mm (9.94 in) (Ex d = 311 mm (12.2 in))
PMC71 high-temperature version	235 mm (9.25 in)	251 mm (9.88 in)
PMC 71 high-temperature version with Ex d[ia], CSA XP or FM XP	305 mm (12 in)	321 mm (12.6 in) (Ex d = 391 mm (15.4 in))

Process connections PMC71 (with ceramic process isolating diaphragm) (continued)

Thread, flush-mounted process isolating diaphragm

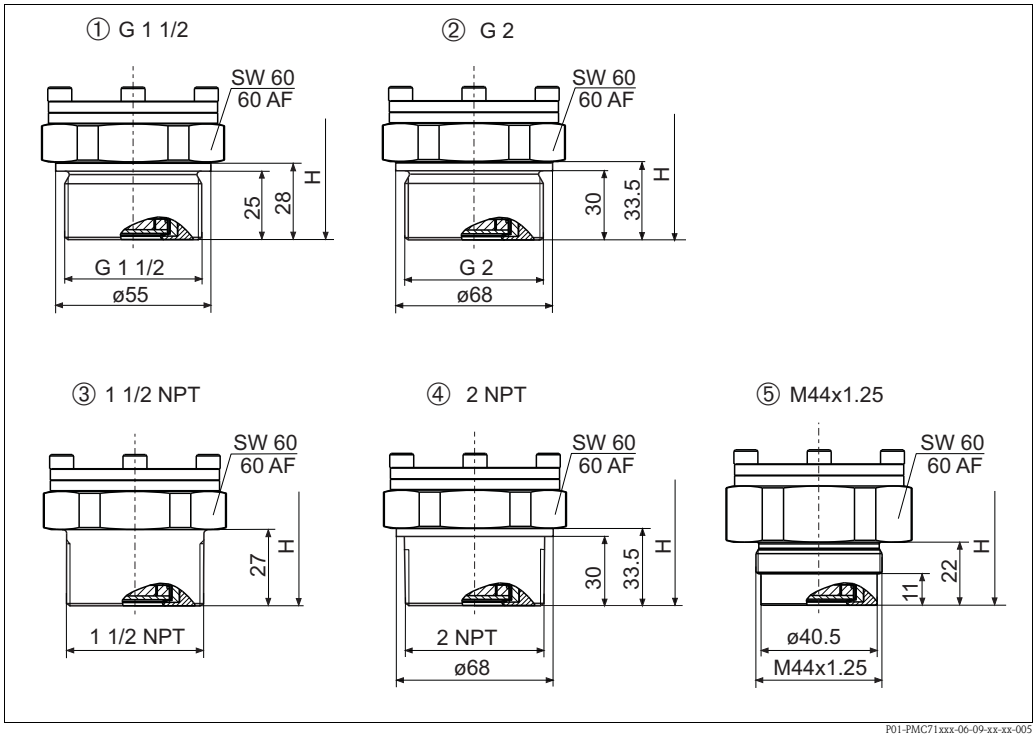

Process connections PMC71,
→ Installation height see table below.

1 *Thread ISO 228 G 1 1/2 A;*
Material version 1G: AISI 316L, version 1H: Alloy C276, version 1J: Monel;
Weight: 0.63 kg (1.39 lbs)

2 *Thread ISO 228 G 2 A;*
Material version 1K: AISI 316L, version 1L: Alloy C276, version 1M: Monel;
Weight: 0.63 kg (1.39 lbs)

3 *Thread ANSI 1 1/2 MNPT;*
Material version 2D: AISI 316L, version 2E: Alloy C276, version 2F: Monel;
Weight: 0.63 kg (1.39 lbs)

4 *Thread ANSI 2 MNPT;*
Material version 2G: AISI 316L, version 2H: Alloy C276, version 2J: Monel;
Weight: 0.63 kg (1.39 lbs)

5 *Thread DIN 13 M 44x1.25;*
Material version 1R: AISI 316L, version 1S: Alloy C276; weight: 0.63 kg (1.39 lbs)

Installation height H for devices with threaded connection and flush-mounted process isolating diaphragm

Description	T14 housing	T17 housing
PMC71/PMC71 high-temperature version	215 mm (8.46 in)	231 mm (9.09 in)
PMC71/PMC71 high-temperature version: with Ex d[ia], CSA XP or FM XP	280 mm (11 in)	296 mm (11.7 in)

Process connections PMC71 (with ceramic process isolating diaphragm) (continued)

EN/DIN flanges, connection dimensions as per EN 1092-1/DIN 2527

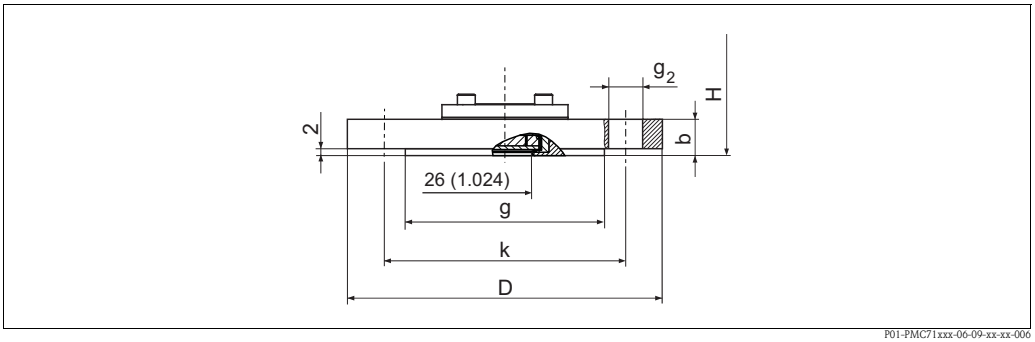

Process connection PMC71, EN/DIN flange with raised face (flush-mounted process isolating diaphragm)
Installation height H → 🗎 41.

	Flange [1]							Boltholes			
Version	**Material**	**Nominal diameter**	**Nominal pressure**	**Shape[2]**	**Diameter** **D** [mm]	**Thickness** **b** [mm]	**Raised face** **g** [mm]	**Quantity**	**Diameter** **g_2** [mm]	**Hole circle** **k** [mm]	**Flange weight [3]** [kg]
BA	AISI 316L	DN 25	PN 10-40	B1 (D)	115	18	68	4	14	85	1.4
CP	AISI 316L	DN 32	PN 10-40	B1 (D)	140	18	78	4	18	100	2.0
CQ	AISI 316L	DN 40	PN 10-40	B1 (D)	150	18	88	4	18	110	2.4
B3	AISI 316L	DN 50	PN 10-40	B1 (D)	165	20	102	4	18	125	3.2
BR	PVDF [4]	DN 50	PN 10-16	B1 (D)	165	21.4	102	4	18	125	0.6
C3	AISI 316L	DN 50	PN 63 (64)	B2 (D)	180	26	102	4	22	135	4.6
BS	PVDF [4]	DN 80	PN 10-16	B1 (D)	200	21.4	138	8	18	160	1.0
B4	AISI 316L	DN 80	PN 10-40	B1 (D)	200	24	138	8	18	160	5.4

1) The roughness of the surface in contact with the media, including the raised face of the flanges (all standards) made of Hastelloy C, Monel or tantalum, is Ra 0.8 µm (31.5 µin). Lower surface roughness on request.

2) Designation as per DIN 2527 in brackets

3) Housing weight → 🗎 65

4) Only mount with a mounting bracket. MWP 10 bar (150 psi), OPL max. 15 bar (225 psi). Process temperature range –10...+60 °C (+14...+140 °F) Max.: 15 bar (225 psi), –10 to +60 °C (+14 to +140 °F)

Process connections PMC71 (with ceramic process isolating diaphragm) (continued)

ANSI flanges, connection dimensions as per ANSI B 16.5, raised face RF

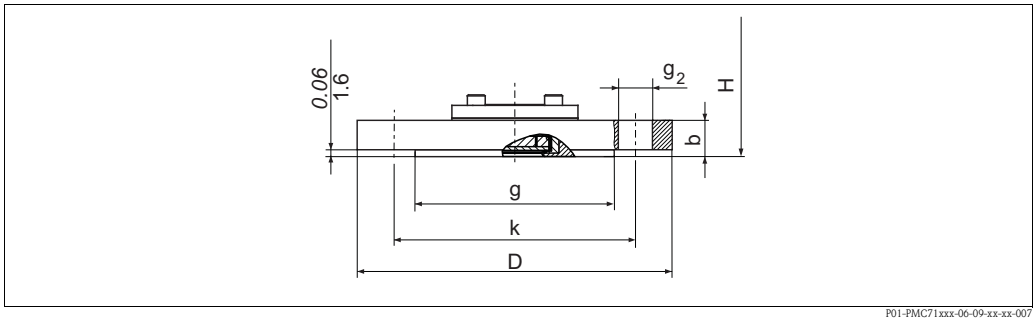

Process connection PMC71, ANSI flange with raised face RF (flush-mounted process isolating diaphragm)
Installation height H → 🗎 41.

	Flange [1]						Boltholes			
Version	**Material**	**Nominal diameter** [in]	**Class** [lb./sq.in]	**Diameter D** [in (mm)]	**Thickness b** [in (mm)]	**Raised face g** [in (mm)]	**Quantity**	**Diameter g_2** [in (mm)]	**Hole circle k** [in (mm)]	**Flange weight [2]** [kg]
AA [3]	AISI 316/316L [4]	1	150	4.25 / 108	1.18 / 30	2 / 50.8	4	0.62 / 15.7	3.12 / 79.2	0.9
AB [3]	AISI 316/316L [4]	1	300	4.88 / 123.9	1.18 / 30	2 / 50.8	4	0.75 / 19	3.5 / 88.9	1.4
AE	AISI 316/316L [4]	1 1/2	150	5 (127)	0.69 (17.5)	2.88 (73.2)	4	0.62 (15.7)	3.88 (98.6)	1.0
AQ	AISI 316/316L [4]	1 1/2	300	6.12 (155.4)	0.81 (20.6)	2.88 (73.2)	4	0.88 (22.4)	4.5 (114.3)	2.6
AF	AISI 316/316L [4]	2	150	6 (152.4)	0.75 (19.1)	3.62 (91.9)	4	0.75 (19.1)	4.75 (120.7)	2.4
JR	ECTFE [5]	2	150	6 (152.4)	0.75 (19.1)	3.62 (91.9)	4	0.75 (19.1)	4.75 (120.7)	2.4
A3	PVDF [6]	2	150	6 (152.4)	0.75 (19.1)	3.62 (91.9)	4	0.75 (19.1)	4.75 (120.7)	0.5
AR	AISI 316/316L [4]	2	300	6.5 (165.1)	0.88 (22.4)	3.62 (91.9)	8	0.75 (19.1)	5 (127)	3.2
AG	AISI 316/316L [4]	3	150	7.5 (190.5)	0.94 (23.9)	5 (127)	4	0.75 (19.1)	6 (152.4)	4.9
JS	ECTFE [5]	3	150	7.5 (190.5)	0.94 (23.9)	5 (127)	4	0.75 (19.1)	6 (152.4)	4.9
A4	PVDF [6]	3	150	7.5 (190.5)	0.94 (23.9)	5 (127)	4	0.75 (19.1)	6 (152.4)	0.9
AS	AISI 316/316L [4]	3	300	8.25 (209.5)	1.12 (28.6)	5 (127)	8	0.88 (22.4)	6.62 (168.1)	6.8
AH	AISI 316/316L [4]	4	150	9 (228.6)	0.94 (23.9)	6.19 (157.2)	8	0.75 (19.1)	7.5 (190.5)	7.1
JT	ECTFE [5]	4	150	9 (228.6)	0.94 (23.9)	6.19 (157.2)	8	0.75 (19.1)	7.5 (190.5)	7.1
AT	AISI 316/316L [4]	4	300	10 (254)	1.25 (31.8)	6.19 (157.2)	8	0.88 (22.4)	7.88 (200.2)	11.6

1) The roughness of the surface in contact with the media, including the raised face of the flanges (all standards) made of Hastelloy C, Monel or tantalum, is Ra 0.8 µm (31.5 µin). Lower surface roughness on request.

2) Housing weight → 🗎 65

3) Screws must be 15 mm (0.59 in) longer than the standard flange screws.

4) Combination of AISI 316 for required pressure resistance and AISI 316L for required chemical resistance (dual rated)

5) ECTFE coating on AISI 316/316L. When operating in hazardous areas, avoid electrostatic charge of the plastic surfaces.

6) Only mount with a mounting bracket. MWP 10 bar (150 psi), OPL max. 15 bar (225 psi). Process temperature range –10...+60 °C (+14...+140 °F) Max.: 15 bar (225 psi), –10 to +60 °C (+14 to +140 °F)

Process connections PMC71 (with ceramic process isolating diaphragm) (continued)

JIS flanges, connection dimensions as per JIS B 2220 BL, raised face RF

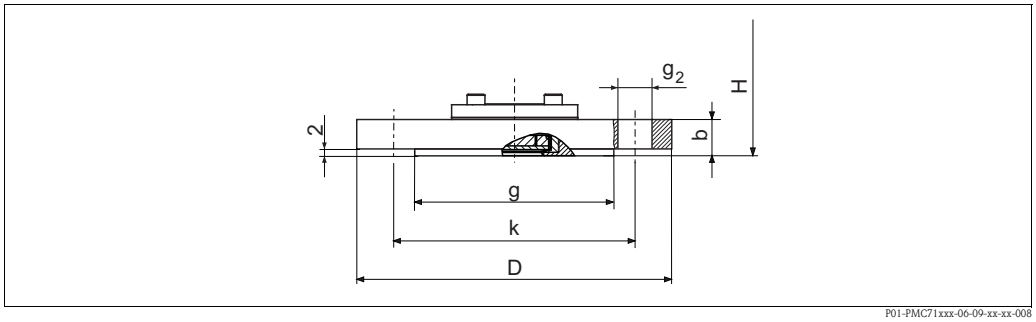

Process connection PMC71, JIS flange with raised face RF (flush-mounted process isolating diaphragm), material: AISI 316L (1.4435)
→ Installation height H, see table below.

	Flange [1]					Boltholes			
Version	**Nominal diameter**	**Nominal pressure**	**Diameter** **D** [mm]	**Thickness** **b** [mm]	**Raised face** **g** [mm]	**Quantity**	**Diameter** **g_2** [mm]	**Hole circle** **k** [mm]	**Flange weight** [2] [kg]
KF	50 A	10 K	155	16	96	4	19	120	2.0
KL	80 A	10 K	185	18	127	8	19	150	3.3
KH	100 A	10 K	210	18	151	8	19	175	4.4

1) The roughness of the surface in contact with the media, including the raised face of the flanges (all standards) made of Alloy C, Monel or tantalum, is Ra 0.8 µm (31.5 µin). Lower surface roughness on request.

2) Housing weight see → 65

Installation height H for devices with flange

Description	T14 housing	T17 housing
PMC71	215 mm (8.46 in)	231 mm (9.09 in)
PMC71 with Ex d[ia], CSA XP or FM XP	280 mm (11 in)	296 mm (11.7 in)

Process connections PMC71 (with ceramic process isolating diaphragm) (continued)

Hygienic connections, flush-mounted process isolating diaphragm

Note!
Many process connections with an EPDM or HNBR seal are approved for the PMC71 in accordance with the guidelines of the 3A Sanitary Standard. To ensure that the 3A approval is valid for the PMC71 version, a 3A-approved process connection together with an EPDM or HNBR seal must be selected when ordering
→ 84 "Ordering information PMC71", feature 80 "Seal", version B or F.

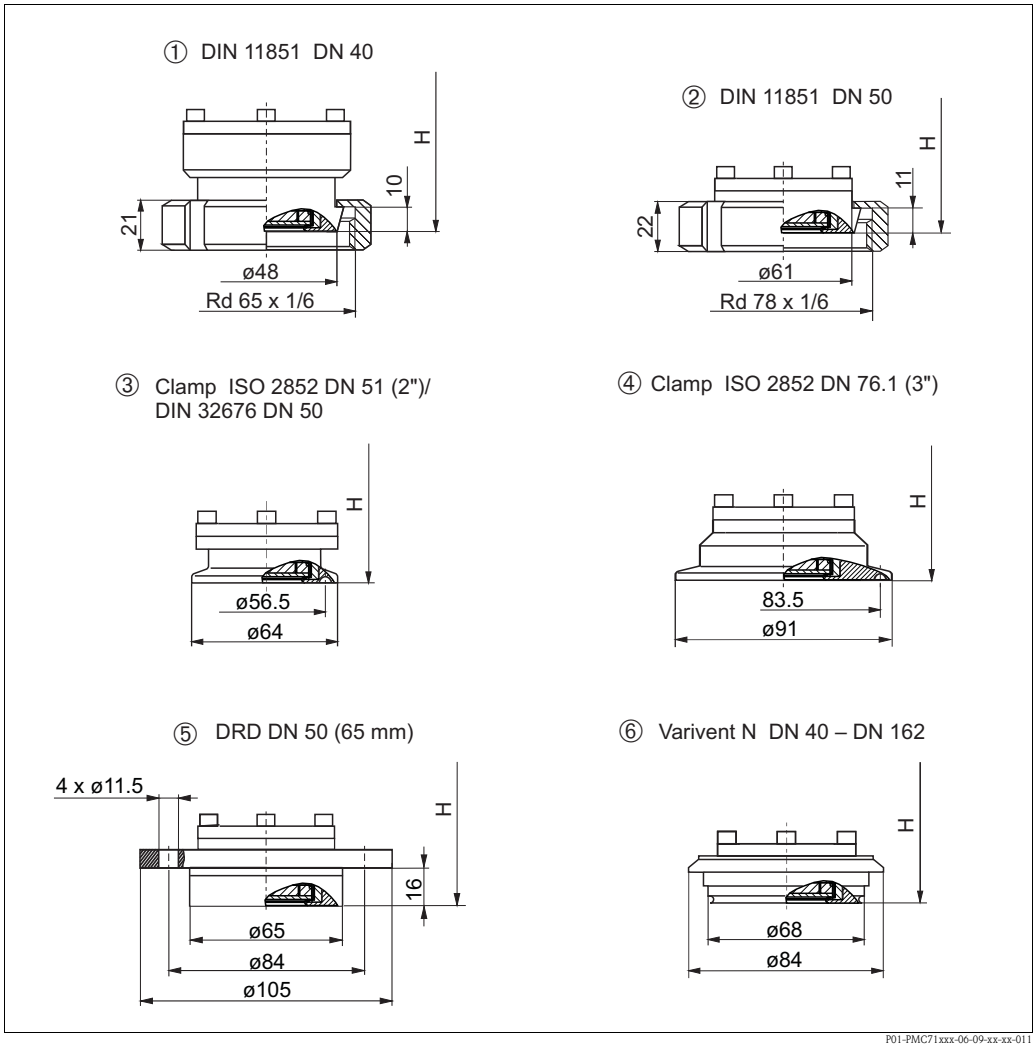

Process connections PMC71, hygienic connections, material AISI 316L
Surface roughness of the surfaces in contact with the media $R_a \leq 0.8$ µm (31.5 µin) as standard. Lower surface roughness on request.

1 *Version MP: DIN 11851 DN 40 PN 25, 3A with HNBR or EPDM seal*
2 *Version MR: DIN 11851 DN 50 PN 25, 3A with HNBR or EPDM seal*
3 *Version TD: Tri-Clamp ISO 2852 (2"), DIN 32675 DN 50, 3A with HNBR or EPDM seal*
4 *Version TF: Tri-Clamp ISO 2852 (3"), 3A with HNBR or EPDM seal*
5 *Version TK: DRD DN 50 (65 mm) PN 25, 3A with HNBR or EPDM seal*
6 *Version TR: Varivent type N for pipes 40 – 162, PN 40, 3A with HNBR or EPDM seal*

Installation height H for devices with hygienic connection and flush-mounted process isolating diaphragm

Description	T14 housing	T17 housing
PMC71/PMC71 high-temperature version	215 mm (8.46 in)	231 mm (9.09 in)
PMC71/PMC71 high-temperature version: with Ex d[ia], CSA XP or FM XP	280 mm (11 in)	296 mm (11.7 in)

Process connections PMP71 (with metallic process isolating diaphragm)

Thread, internal process isolating diaphragm

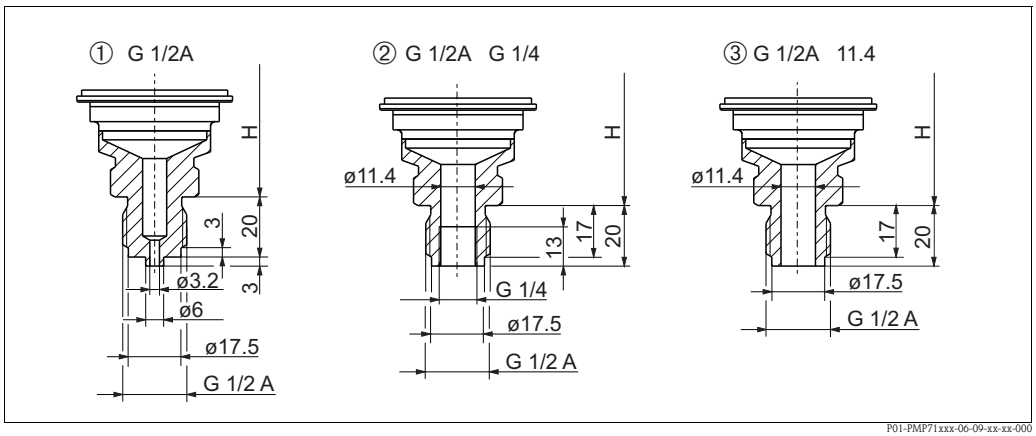

Process connections PMP71, thread ISO 228
Installation height H → 📄 44.

1 *Thread ISO 228 G 1/2 A EN 837;*
Material version GA: AISI 316L, version GB: Alloy C276; weight: 0.6 kg (1.32 lbs)
2 *Thread ISO 228 G 1/2 A G 1/4 (female);*
Material version GE: AISI 316L, version GF: Alloy C276; weight: 0.6 kg (1.32 lbs)
3 *Thread ISO 228 G 1/2 A hole 11.4 mm (0.45 in);*
Material version GH: AISI 316L, version GJ: Alloy C276; weight: 0.6 kg (1.32 lbs)

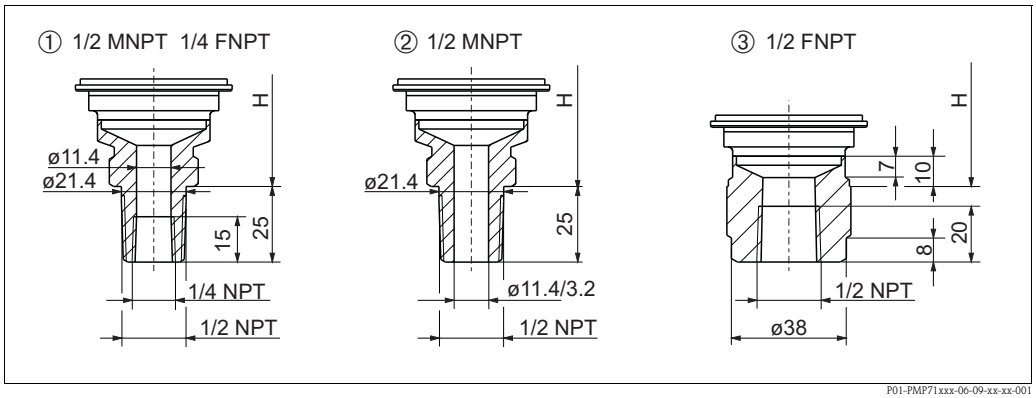

Process connections PMP71, thread ANSI
Installation height H → 📄 44.

1 *Thread ANSI 1/2 MNPT 1/4 FNPT;*
Material version RA: AISI 316L, version RB: Alloy C276; weight: 0.6 kg (1.32 lbs)
2 *Thread ANSI 1/2 MNPT hole: 400 bar (6000 psi) = 11.4 mm (0.45 in);*
700 bar (10500 pis) = 3.2 mm (0.13 in)
Material version RD: AISI 316L, version RE: Alloy C276; weight: 0.6 kg (1.32 lbs)
3 *Thread ANSI 1/2 FNPT;*
Material version RH: AISI 316L, version RJ: Alloy C276; weight: 0.7 kg (1.54 lbs)

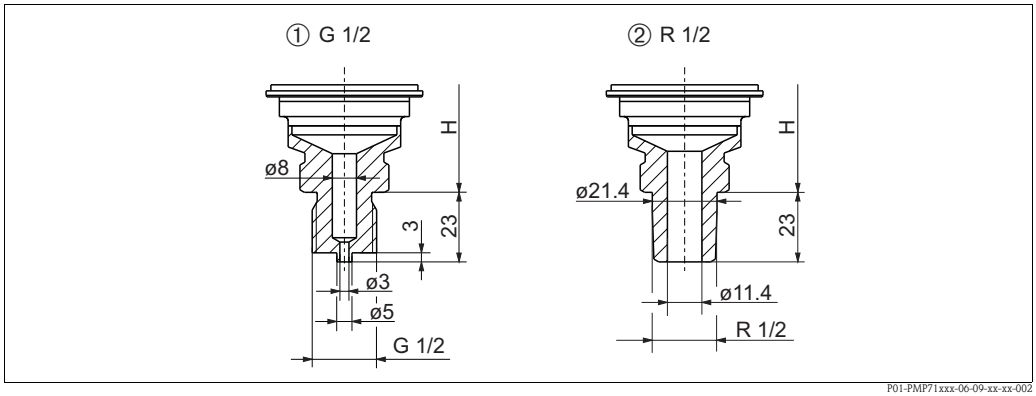

Process connections PMP71, thread JIS
→ Installation height H see table below.

1 Version GL: thread JIS B0202 G 1/2 (male), material: AISI 316L; weight: 0.6 kg (1.32 lbs)
2 Version RL: thread JIS B0203 R 1/2 (male), material: AISI 316L; weight: 0.6 kg (1.32 lbs)

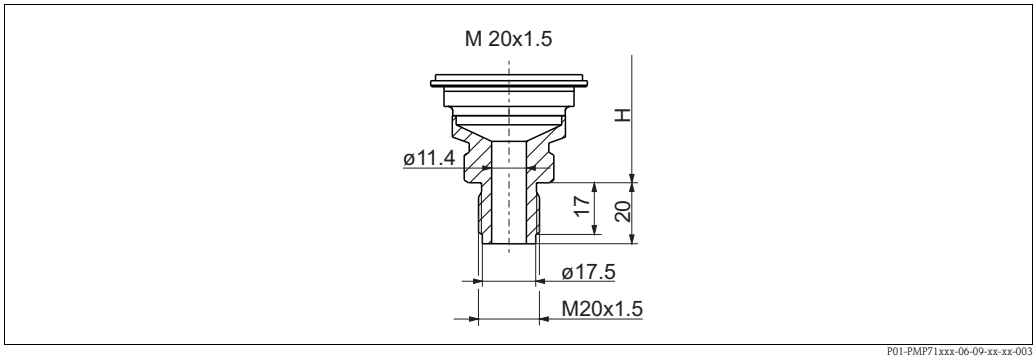

Process connections PMP71 thread DIN 13 M 20x1.5 hole 11.4 mm (0.45 in)
Material version GP: AISI 316L, version GQ: Alloy C276; weight: 0.6 kg (1.32 lbs)
→ Installation height H, see table below.

Installation height H for devices with threaded connection and internal process isolating diaphragm

	T14 housing	**T17 housing**
Height H	165 mm (6.5 in)	181 mm (7.13 in)
	Note! The versions with a 700 bar (10500 psi) sensor are approx. 20 mm (0.79 in) higher.	

Process connections PMP71 (with metallic process isolating diaphragm) (continued)

Thread, flush-mounted process isolating diaphragm

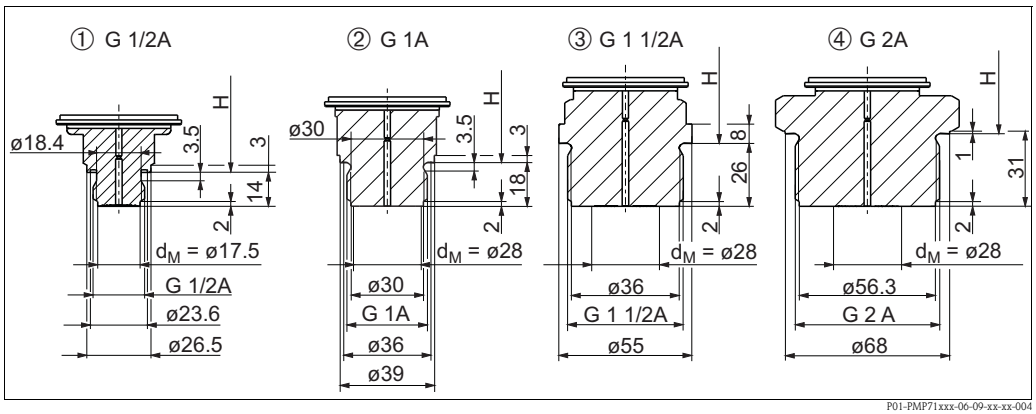

Process connections PMP71, thread ISO 228
Installation height H → 🗎 46.

1 *Thread ISO 228 G 1/2 A DIN 3852 (Viton seal included);*
Material version 1A: AISI 316L, version 1B: Alloy C276; weight: 0.4 kg (0.88 lbs)
2 *Thread ISO 228 G 1 A;*
Material version 1D: AISI 316L, version 1E: Alloy C276; weight: 0.7 kg (1.54 lbs)
3 *Thread ISO 228 G 1 1/2 A*
Material version 1G: AISI 316L, version 1H: Alloy C276; weight: 1.1 kg (2.43 lbs)
4 *Thread ISO 228 G 2 A*
Material version 1K: AISI 316L, version 1L: Alloy C276; weight: 1.5 kg (3.31 lbs)

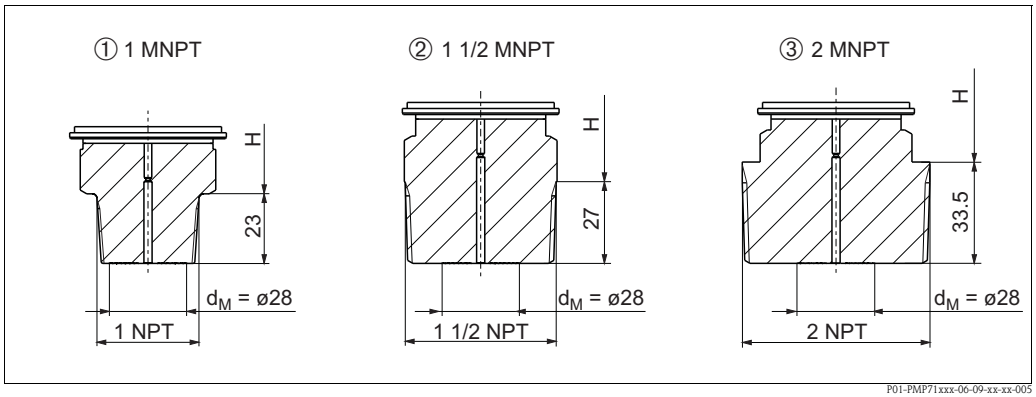

Process connections PMP71, thread ANSI
Installation height H → 🗎 46.

1 *Thread ANSI 1 MNPT;*
Material version 2A: AISI 316L, version 2B: Alloy C276; weight: 0.7 kg (1.54 lbs)
2 *Thread ANSI 1 1/2 MNPT;*
Material version 2D: AISI 316L, version 2E: Alloy C276; weight: 1.0 kg (2.21 lbs)
3 *Thread ANSI 2 MNPT*
Material version 2G: AISI 316L, version 2H: Alloy C276; weight: 1.3 kg (2.87 lbs)

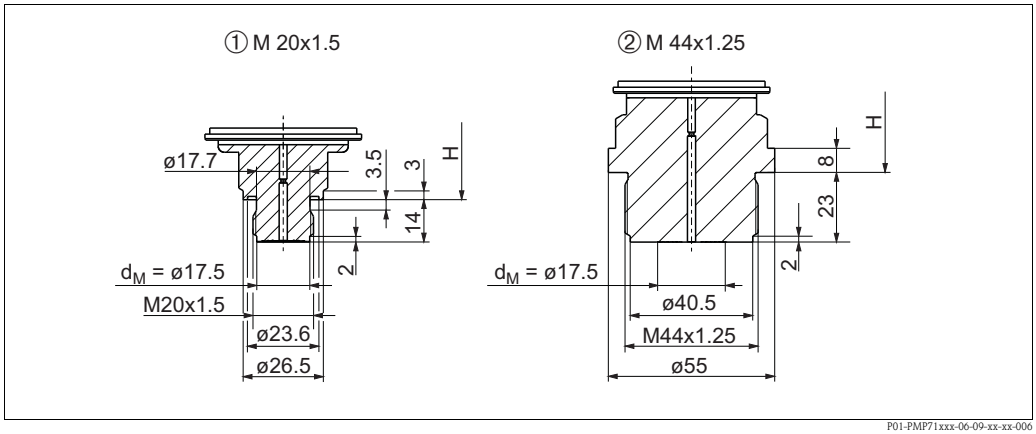

Process connections PMP71, thread DIN
→ Installation height H see table, below.

1 Thread DIN 16288 M20;
Material version 1N: AISI 316L, version 1P: Alloy C276; weight: 0.4 kg (0.88 lbs)
2 Thread DIN 13 M 44 x 1.25;
Material version 1R: AISI 316L, version 1S: Alloy C276; weight: 1.1 kg (2.43 lbs)

Installation height H for devices with threaded connection and flush-mounted process isolating diaphragm

Description	T14 housing	T17 housing
G 1/2	163 mm (6.42 in)	179 mm (7.05 in)
G 1	167 mm (6.57 in)	183 mm (7.2 in)
G 1 1/2 A	163 mm (6.42 in)	179 mm (7.05 in)
G 2 A	162 mm (6.38 in)	178 mm (7.01 in)
1 MNPT	162 mm (6.38 in)	178 mm (7.01 in)
1 1/2 MNPT	165 mm (6.5 in)	181 mm (7.13 in)
2 MNPT	159 mm (6.26 in)	175 mm (6.89 in)
M 20x1.5	163 mm (6.42 in)	179 mm (7.05 in)
M 44x1.25	170 mm (6.69 in)	186 mm (7.32 in)

Process connections PMP71 (with metallic process isolating diaphragm) (continued)

EN/DIN flanges, connection dimensions as per EN 1092-1/DIN 2527

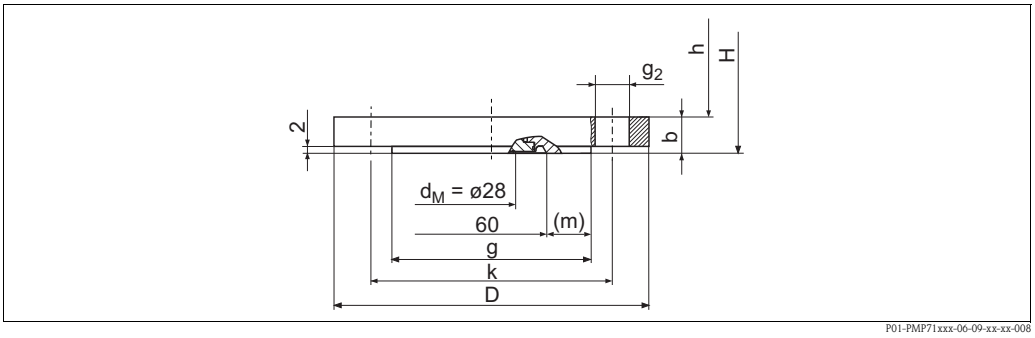

Process connection PMP71, EN/DIN flange with raised face, material AISI 316L

H: device height = height of the device without flange h + flange thickness b
Height h → 📄 48.

	Flange [1]							Boltholes			
Version	**Nominal diameter**	**Nominal pressure**	**Shape [2]**	**Diameter** **D** [mm]	**Thickness** **b** [mm]	**Raised face** **g** [mm]	**Width of raised face** **(m)** [mm]	**Quantity**	**Diameter** **g_2** [mm]	**Hole circle** **k** [mm]	**Flange weight [3]** [kg]
CN	DN 25	PN 10-40	B1 (D)	115	18	68 [4]	4	4	14	85	1.2
CP	DN 32	PN 10-40	B1 (D)	140	18	78 [4]	9	4	18	100	1.9
CQ	DN 40	PN 10-40	B1 (D)	150	18	88 [4]	14	4	18	110	2.2
B3	DN 50	PN 10-40	B1 (D)	165	20	102	-	4	18	125	3.0
B4	DN 80	PN 10-40	B1 (D)	200	24	138	-	8	18	160	5.3

1) The roughness of the surface in contact with the media, including the raised face of the flanges (all standards) made of Alloy C, Monel or tantalum, is Ra 0.8 µm (31.5 µin). Lower surface roughness on request.

2) Designation as per DIN 2527 in brackets

3) Housing weight → 📄 65

4) With these process connections the raised face is smaller than described in the standard. Due to a smaller raised face a special seal must be used. Refer to a manufacturer of seals or your local Endress+Hauser Sales Center.

Process connections PMP71 (with metallic process isolating diaphragm) (continued)

ANSI flanges, connection dimensions as per ANSI B 16.5, raised face RF
JIS flanges, connection dimensions as per B 2220 BL, raised face RF

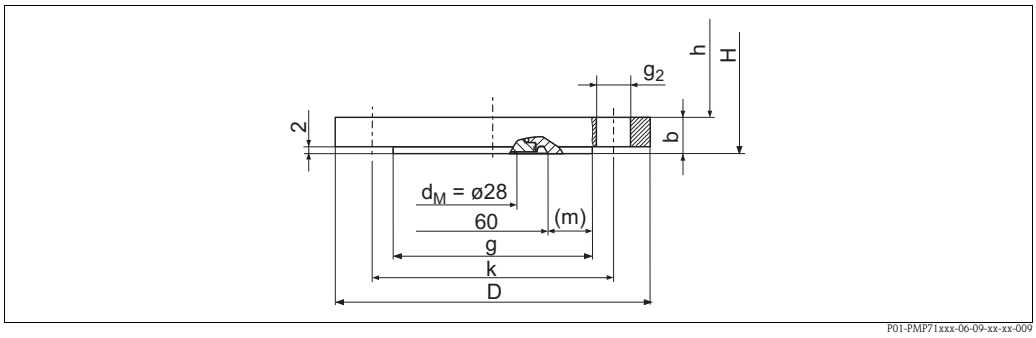

Process connection PMP71, ANSI flange or JIS flange with raised face RF (see table below)

H: device height = height of device without flange h + flange thickness b. For the height h → *📄 48.*

	Flange [1]							Boltholes			
Version	Material	Nominal diameter	Class/ nominal pressure	Diameter D [in (mm)]	Thickness b [in (mm)]	Diameter of raised face g [in (mm)]	Width of raised face (m) [in (mm)]	Quantity	Diameter g_2 [in (mm)]	Hole circle k [in (mm)]	Flange weight [2] [kg]
ANSI flanges											
AN	AISI 316/316L [3]	1 in	300 lb./sq.in	4.88 (124)	0.69 (17.5)	2.76 [4] (70)	0.2 (5)	4	0.75 (19.1)	3.5 (88.9)	1.3
AE	AISI 316/316L [3]	1 1/2 in	150 lb./sq.in	5 (127)	0.69 (17.5)	2.88 [4] (73.2)	0.52 (6.6)	4	0.62 (15.7)	3.88 (98.6)	1.5
AQ	AISI 316/316L [3]	1 1/2 in	300 lb./sq.in	6.12 (155.4)	0.81 (20.6)	2.88 [4] (73.2)	0.52 (6.6)	4	0.88 (22.4)	4.5 (114.3)	2.6
AF	AISI 316/316L [3]	2 in	150 lb./sq.in	6 (152.4)	0.75 (19.1)	3.62 (91.9)	–	4	0.75 (19.1)	4.75 (120.7)	2.4
AR	AISI 316/316L [3]	2 in	300 lb./sq.in	7.5 (190.5)	0.88 (22.3)	3.62 (91.9)	–	8	0.75 (19.1)	5 (127)	3.2
AG	AISI 316/316L [3]	3 in	150 lb./sq.in	7.5 (190.5)	0.94 (23.9)	5 (127)	–	4	0.75 (19.1)	6 (152.4)	4.9
AS	AISI 316/316L [3]	3 in	300 lb./sq.in	8.25 (209.5)	1.12 (28.6)	5 (127)	–	8	0.88 (22.4)	6.62 (168.1)	6.7
AH	AISI 316/316L [3]	4 in	150 lb./sq.in	9 (228.6)	0.94 (23.9)	6.19 (157.2)	–	8	0.75 (19.1)	7.5 (190.5)	7.1
AT	AISI 316/316L [3]	4 in	300 lb./sq.in	10 (254)	1.25 (31.8)	6.19 (157.2)	–	8	0.88 (22.4)	7.88 (200.2)	11.6
JIS flanges											
KA	AISI 316L	25 A	20 K	*125*	*16*	67 [4]	0.14 (3.5)	4	*19*	*90*	1.5
KF	AISI 316L	50 A	10 K	*155*	*16*	*96*	–	4	*19*	*120*	2.0
KL	AISI 316L	80 A	10 K	*185*	*18*	*127*	–	8	*19*	*150*	3.3
KH	AISI 316L	100 A	10 K	*210*	*18*	*151*	–	8	*19*	*175*	4.4

1) The roughness of the surface in contact with the media, including the raised face of the flanges (all standards) made of Alloy C, Monel or tantalum, is Ra 0.8 µm (31.5 µin). Lower surface roughness on request.

2) Housing weight → 📄 65

3) Combination of AISI 316 for required pressure resistance and AISI 316L for required chemical resistance (dual rated)

4) With these process connections the raised face is smaller than described in the standard. Due to a smaller raised face a special seal must be used. Refer to a manufacturer of seals or your local Endress+Hauser Sales Center.

Height h for devices with flange

	T14 housing	T17 housing
Height h	165 mm (6.5 in)	181 mm (7.13 in)

Oval flange

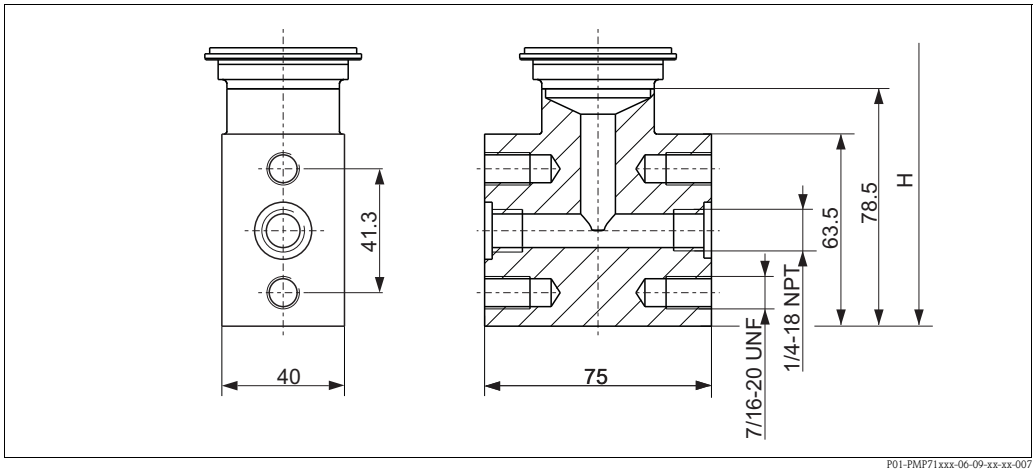

Version UR: oval flange adapter 1/4-18 NPT as per IEC 61518, material 316L (1.4404), mounting: 7/16-20 UNF; Weight: 1.9 kg (4.19 lbs)

	T14 housing	**T17 housing**
Height H	199 mm (7.83 in)	215 mm (8.46 in)

Prepared for diaphragm seal mount

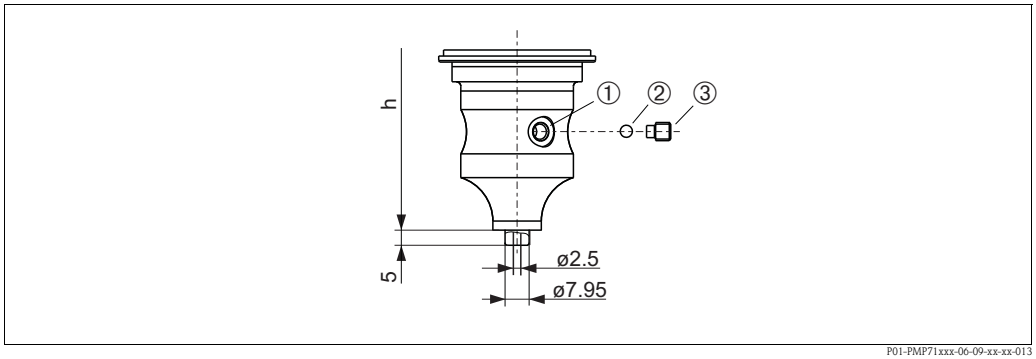

Version U1: material AISI 316L (1.4404), prepared for diaphragm seal mount

1 *Hole for filling fluid*
2 *Bearing DIN 5401 (1.3505)*
3 *Setscrew with hexagonal recess 4 mm (0.16 in), material A2-70*

	T14 housing	**T17 housing**
Height h	190 mm (7.48 in)	204 mm (8.03 in)

PMP75 basic device

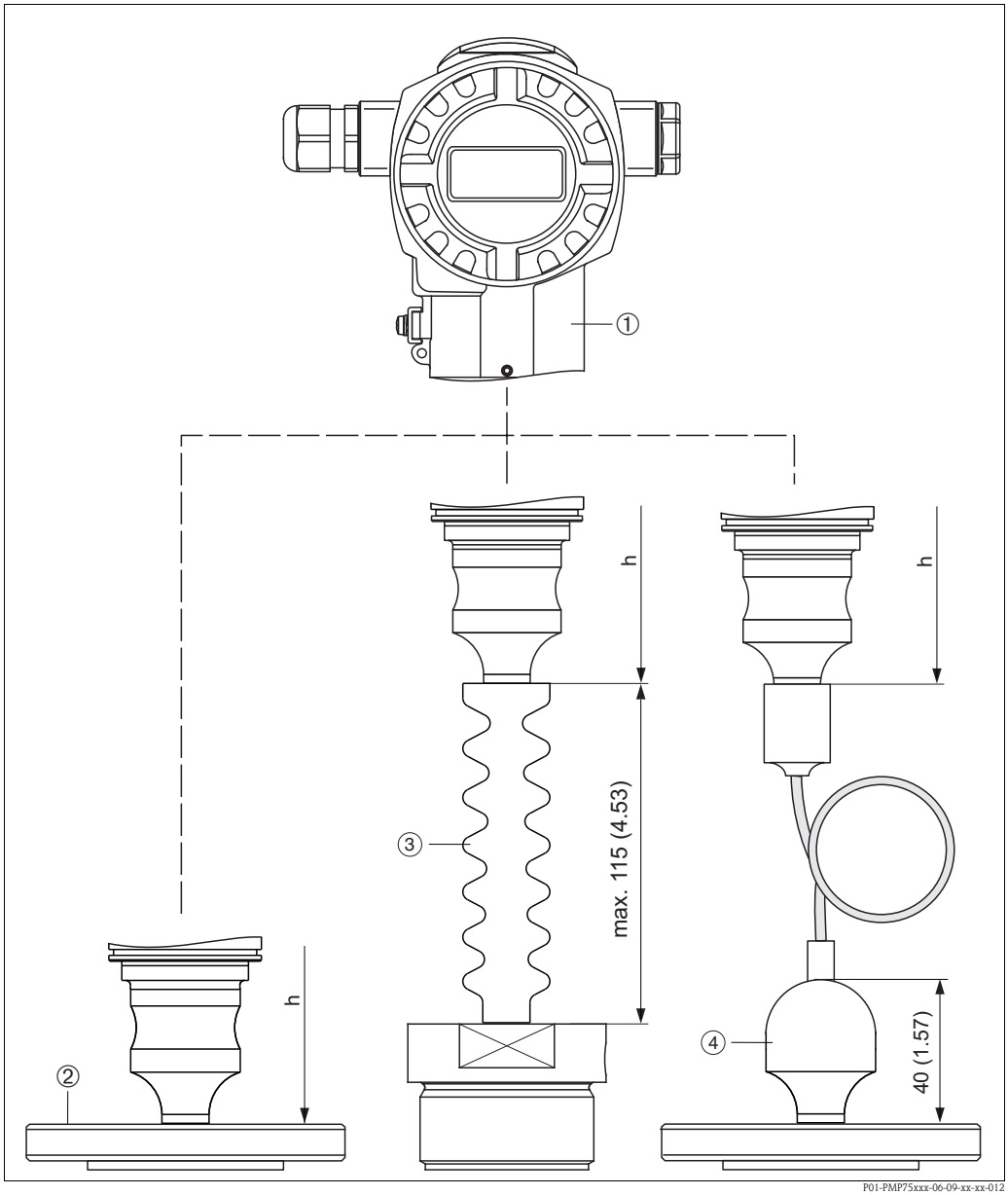

PMP75 basic device with diaphragm seal

1 *PMP75 basic device*
2 *Diaphragm seal, here e.g. flange diaphragm seal*
3 *Diaphragm seal with temperature isolator*
4 *Process connections with capillary tubes are 40 mm (1,57 in) higher than process connections without capillary tubes*

	T14 housing	**T17 housing**
Height h	190 mm (7.48 in)	204 mm (8.03 in)

Process connections PMP75 (with diaphragm seal)

Note!
- The weights of the diaphragm seals are given in the tables. See → 65 for the weight of the housing.
- The following drawings are drawings that illustrate how the system works in principle. In other words, the dimensions of a diaphragm seal supplied can deviate from the dimensions given in this document.
- With the use of high-temperature oils the design can deviate strongly.
- Observe the information in the "Planning instructions, diaphragm seal systems" section → 75 ff.
- For further information please contact your local Endress+Hauser Sales Center.

Diaphragm seal cell structure

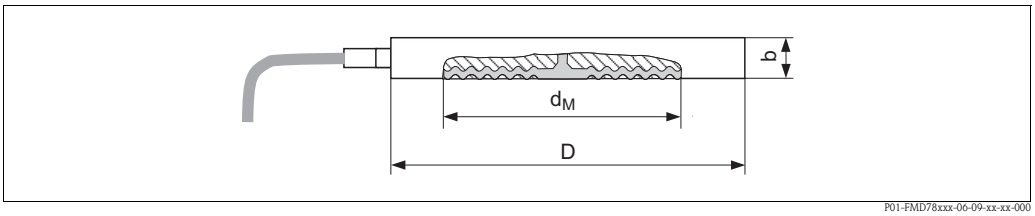

Process connection PMP75, material AISI 316L

	Flange				Diaphragm seal	
Version	**Nominal diameter**	**Nominal pressure** [1]	**Max. diameter** **D** [mm]	**Thickness** **b** [mm]	**Max. diameter of the process isolating diaphragm** **d_M** [mm]	**Weight of two diaphragm seals** [kg]
UI	DN 50	PN 16-400	102	20	59	2.6
UJ	DN 80	PN 16-400	138	20	89	4.6
UK	DN 100	PN 16-400	162	20	89	6.2
	[in]	[lb/sq.in]	[in (mm)]	[in (mm)]	[in (mm)]	[kg]
UL	2	150-2500	4.01 (102)	0.79 (20)	2.32 (59)	2.6
UM	3	150-2500	5.35 (136)	0.79 (20)	3.50 (89)	4.6
UR	4	150-2500	6.22 (158)	0.79 (20)	3.50 (89)	6.2

1) The specified nominal pressure applies to the diaphragm seal. The maximum pressure for the measuring device is dependent on the lowest-rated element, with regard to pressure, of the selected components. See also → 34, "Pressure specifications" section.

Process connections PMP75 (with diaphragm seal) (continued)

Thread, flush-mounted process isolating diaphragm

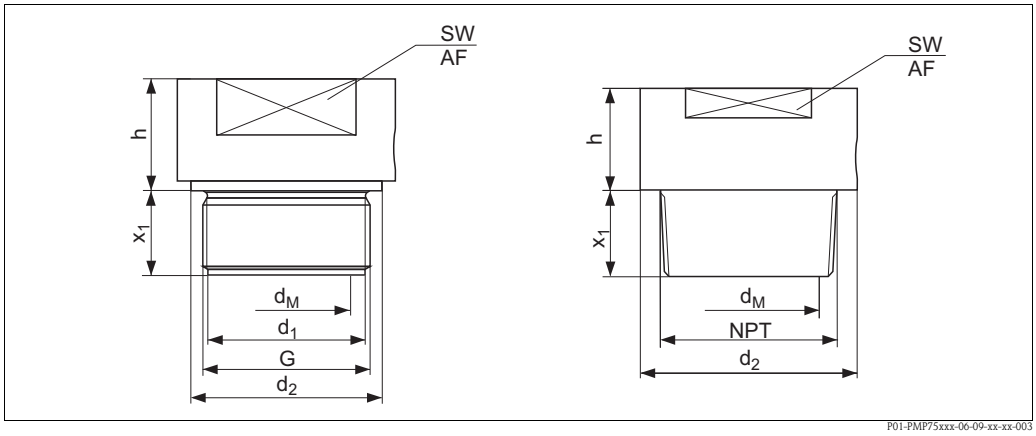

Process connections PMP75, left: thread ISO 228, right: thread ANSI

Threaded connections								Diaphragm seal		
Version	**Material**	**Thread**	**Nominal pressure**	**Diameter**	**Diameter**	**Screw-in length**	**Across flats**	**Max. diameter of the process isolating diaphragm**	**Height**	**Diaphragm seal weight**
			PN	**d_1** [mm]	**d_2** [mm]	**x_1** [mm]	**SW/AF**	**d_M** [mm]	**h** [mm]	[kg]
1D	AISI 316L	G 1 A	400	30	39	21 [1)]	41	30	19	0.4
1E	Alloy C276									0.5
1G	AISI 316L	G 1 1/2 A	400	44	55	30	50	42	20	0.9
1H	Alloy C276									1.0
1K	AISI 316L	G 2	400	56	68	30	65	50	20	1.9
1L	Alloy C276									2.1
2A	AISI 316L	1 MNPT	400	–	48	28	41	24	37	0.6
2B	Alloy C276									0.7
2D	AISI 316L	1 1/2 MNPT	400	–	60	30	41	36	20	0.9
2E	Alloy C276									1.0
2G	AISI 316L	2 MNPT	400	–	78	30	65	38	35	1.8
2H	Alloy C276									2.0

1) 28 mm (1.1 in) in conjunction with high-temperature oil

Process connections PMP75 (with diaphragm seal) (continued)

Tri-Clamp ISO 2852

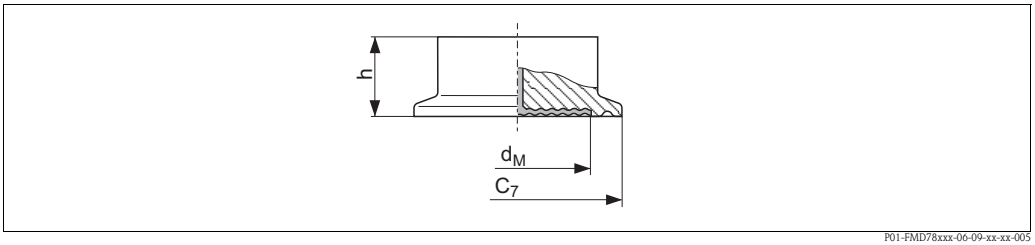

P01-FMD78xxx-06-09-xx-xx-005

Process connection PMP75, material: AISI 316L, surface roughness of the surfaces in contact with the media $R_a \leq 0.8\,\mu m$ (31.5 µin) as standard.

Version	Nominal diameter ISO 2852	Nominal diameter DIN 32676	Nominal diameter [in]	Diameter C_7 [mm]	Max. diameter of the process isolating diaphragm d_M [mm]	Height h [mm]	Diaphragm seal weight [kg]
TB	DN 25	DN 25	1	50.5	24	37	0.32
TC [1)]	DN 38	DN 40	1 1/2	50.5	34	30	1.0
TD [1)]	DN 51	DN 50	2	64	48	30	1.1
TF	DN 76.1	–	3	91	73	30	1.2

1) Diaphragm seal versions optionally in conformity with ASME-BPE for use in biochemical processes, wetted surfaces $R_a \leq 0.38\,\mu m$, electropolished; to be ordered using feature 110 "Additional option", version "P" in the order code.

Tri-Clamp pipe diaphragm seal ISO 2852

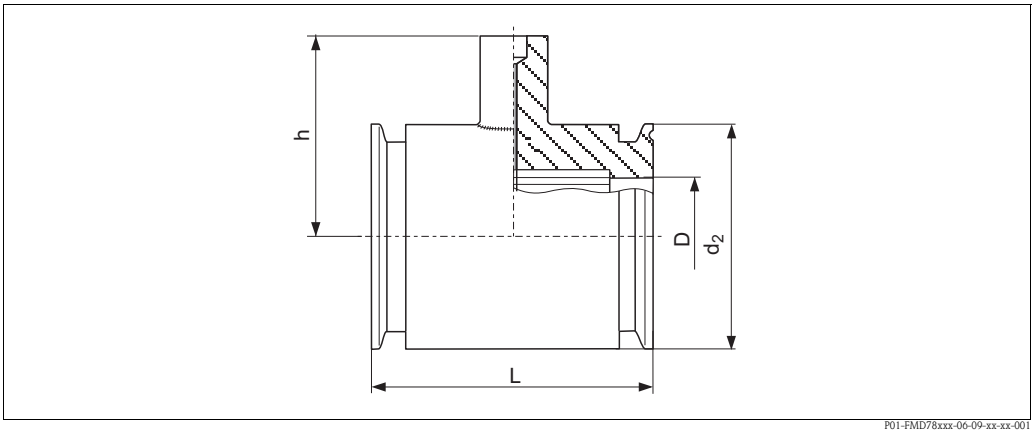

P01-FMD78xxx-06-09-xx-xx-001

Process connection PMP75, material AISI 316L, surface roughness of the surfaces in contact with the media $R_a \leq 0.8\,\mu m$ (31.5 µin) as standard. Lower surface roughness on request.

Version	Nominal diameter ISO 2852	Nominal diameter	Nominal pressure	Diameter D [in]	Diameter d_2 [mm]	Height h [mm]	Face-to-face length L [mm]	Diaphragm seal weight [kg]
SB	DN 25	1	PN 40	22.5	50.5	67	126	1.7
SC [1)]	DN 38	1 1/2	PN 40	35.5	50.5	67	126	1.0
SD [1)]	DN 51	2	PN 40	48.6	64	79	100	1.7

1) Including 3.1 and pressure test as per Pressure Equipment Directive, category II

Varivent N for pipes DN 40 – DN 162

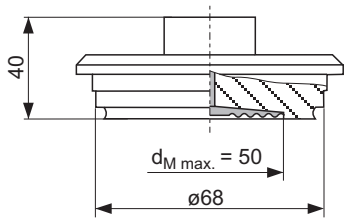

P01-FMD78xxx-06-09-xx-xx-006

Process connection PMP75, surface roughness of the surfaces in contact with the media $R_a \leq 0.8$ µm (31.5 µin) as standard.

Version	Material	Nominal pressure	Diaphragm seal weight [kg]
TR [1)]	AISI 316L	PN 40	1.3

1) Diaphragm seal versions optionally in conformity with ASME-BPE for use in biochemical processes, wetted surfaces $R_a \leq 0.38$ µm (15 µin), electropolished; to be ordered using feature 110 "Additional option", version "P" in the order code.

DRD DN50 (65 mm)

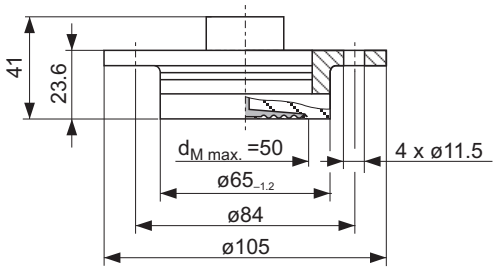

P01-FM78xxx-06-09-xx-xx-002

Process connection PMP75, surface roughness of the surfaces in contact with the media $R_a \leq 0.8$ µm (31.5 µin) as standard. Lower surface roughness on request.

Version	Material	Nominal pressure	Diaphragm seal weight [kg]
TK	AISI 316L	PN 25	0.75

Process connections PMP75 (with diaphragm seal) (continued)

SMS nozzles with slotted nut

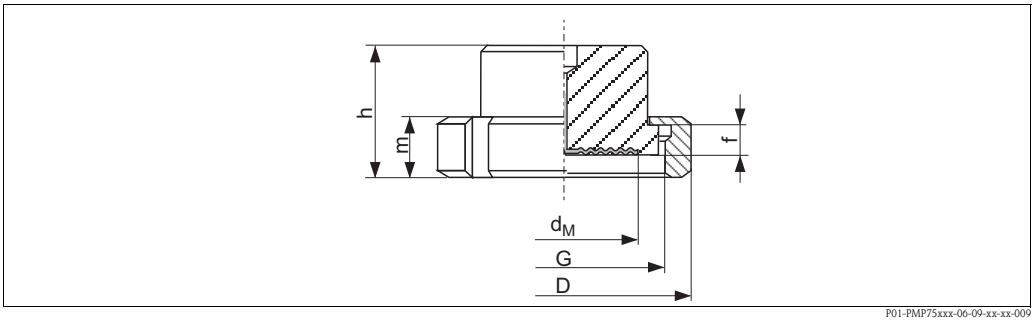

Process connection PMP75, material AISI 316L, surface roughness of the surfaces in contact with the media $R_a \leq 0.8\,\mu m$ (31.5 µin) as standard. Lower surface roughness on request.

Version	Nominal diameter	Nominal pressure	Diameter	Adapter height	Thread	Height	Height	Max. diameter of the process isolating diaphragm	Diaphragm seal weight
			D	f	G	m	h	d_M	
	[inch]	[bar]	[mm]	[mm]		[mm]	[mm]	[mm]	[kg]
TG	1	PN 25	54	3.5	Rd 40 – 1/6	20	42.5	24	0.25
TH	1 1/2	PN 25	74	4	Rd 60 – 1/6	25	57	36	0.65
TI	2	PN 25	84	4	Rd 70 – 1/6	26	62	48	1.05

APV-RJT nozzles with slotted nut

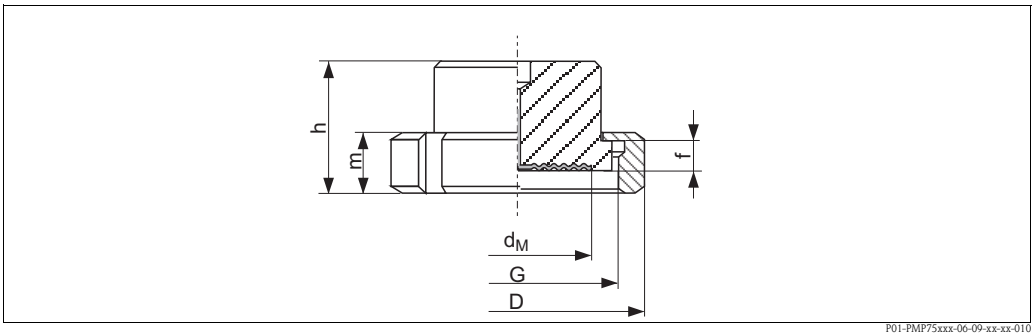

Process connection PMP75, material AISI 316L, surface roughness of the surfaces in contact with the media $R_a \leq 0.8\,\mu m$ (31.5 µin) as standard. Lower surface roughness on request.

Version	Nominal diameter	Nominal pressure	Diameter	Adapter height	Thread	Height	Height	Max. diameter of the process isolating diaphragm	Diaphragm seal weight
		PN	D	f	G	m	h	d_M	
	[inch]	[bar]	[mm]	[mm]		[mm]	[mm]	[mm]	[kg]
TL	1	PN 40	77	6.5	1 13/16 – 1/8"	22	42.6	21	0.45
TM	1 1/2	PN 40	72	6.4	2 5/16 – 1/8"	22	42.6	28	0.75
TN	2	PN 40	86	6.4	2 7/8 – 1/8"	22	42.6	38	1.2

APV-ISS nozzles with slotted nut

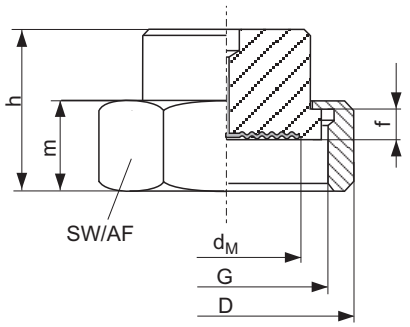

P01-PMP75xxx-06-09-xx-xx-011

Process connection PMP75, material AISI 316L, surface roughness of the surfaces in contact with the media $R_a \leq 0.8\,\mu m$ (31.5 µin) as standard. Lower surface roughness on request.

Version	Nominal diameter [inch]	Nominal pressure [bar]	Diameter D [mm]	Adapter height f [mm]	Thread G	Height m [mm]	Across flats AF	Height h [mm]	Max. diaameter of the process isolating diaphragm d_M [mm]	Diaphragm seal weight [kg]
TP	1	PN 40	54.1	4	1 1/2" – 1/8"	30	46.8	50	24	0.4
TQ	1 1/2	PN 40	72	4	2" – 1/8"	30	62	50	34	0.6
TS	2	PN 40	89	4	2 1/2" – 1/8"	30	77	50	45	1.1

Taper adapter with slotted nut, DIN 11851

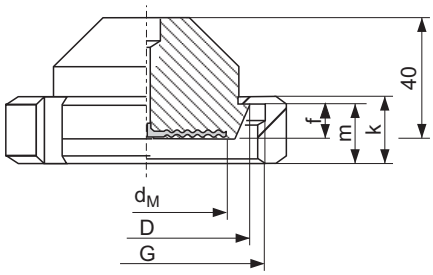

P01-FMD78xxx-06-09-xx-xx-007

Process connection PMP75, material AISI 316L, surface roughness of the surfaces in contact with the media $R_a \leq 0.8\,\mu m$ (31.5 µin) as standard. Lower surface roughness on request.

	Taper adapter				Slotted nut			Diaphragm seal	
Version	Nominal diameter	Nominal pressure	Diameter D [mm]	Adapter height f [mm]	Thread G	Height k [mm]	Height m [mm]	Max. diameter of the process isolating diaphragm d_M [mm]	Diaphragm seal weight [kg]
MR	DN 50	PN 25	68.5	11	Rd 78 x 1/6"	22	19	52	1.1
MS	DN 65	PN 25	86	12	Rd 95 x 1/6"	35	21	66	2.0
MT	DN 80	PN 25	100	12	Rd 110 x 1/4"	30	26	81	2.55

Process connections PMP75 (with diaphragm seal) (continued)

EN/DIN flanges, connection dimensions as per EN 1092-1/DIN 2527 and DIN 2501-1

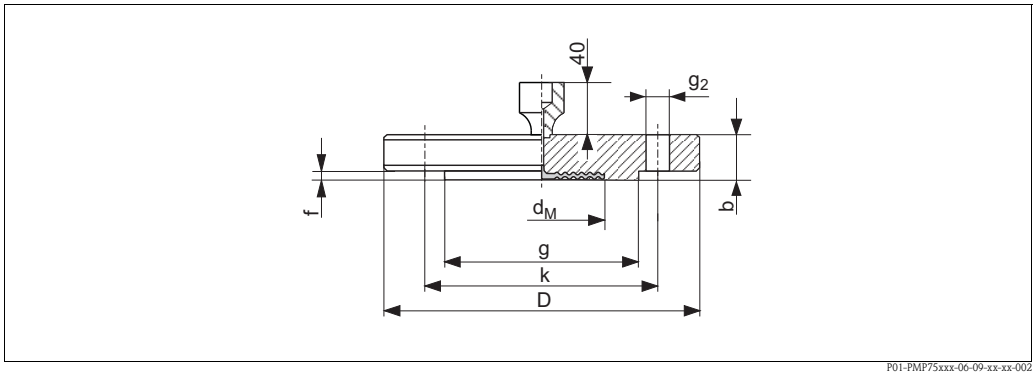

Process connection PMP75, EN/DIN flange with flush-mounted process isolating diaphragm, material AISI 316L

	Flange [1]							Boltholes			Diaphragm seal	
Version	**Nominal diameter**	**Nominal pressure**	**Shape[2]**	**Diameter**	**Thick-ness**	**Raised face**		**Quantity**	**Diameter**	**Hole circle**	**Max. diameter of the process isolating diaphragm**	**Diaphragm seal weight**
				D	**b**	**g**	**f**		**g_2**	**k**	**d_M**	
				[mm]	[mm]	[mm]	[mm]		[mm]	[mm]	[mm]	[kg]
CN	DN 25	PN 10-40	B1 (D)	115	18	68	3	4	14	85	32	2.1
DN	DN 25	PN 63-160	B2 (E)	140	24	68	2	4	18	100	28	2.5
EN	DN 25	PN 250	B2 (E)	150	28	68	2	4	22	105	28	3.7
E1	DN 25	PN 400	B2 (E)	180	38	68	2	4	26	130	28	7.0
CP	DN 32	PN 10-40	B1 (D)	140	18	77	2.6	4	18	100	34	1.9
CQ	DN 40	PN 10-40	B1 (D)	150	18	87	2.6	4	18	110	48	2.2
B3	DN 50	PN 10-40	B1 (D)	165	20	102	3	4	18	125	59	3.0
C3	DN 50	PN 63	B2 (E)	180	26	102	3	4	22	135	59	4.6
EF	DN 50	PN 100-160	B2 (E)	195	30	102	3	4	26	145	59	6.2
ER	DN 50	PN 250	B2 (E)	200	38	102	3	8	26	150	59	7.7
E3	DN 50	PN 400	B2 (E)	235	52	102	3	8	30	180	59	14.7
B4	DN 80	PN 10-40	B1 (D)	200	24	138	3.5	8	18	160	89	5.3
C4	DN 80	PN 100	B2 (E)	230	32	138	4	8	24	180	89	8.9
C5	DN 100	PN 100	B2 (E)	265	36	175	5	8	30	210	89	13.7

1) The roughness of the surface in contact with the media, including the raised face of the flanges (all standards) made of Hastelloy C, Monel or tantalum, is Ra 0.8 µm (31.5 µin). Lower surface roughness on request.

2) Designation as per DIN 2527 in brackets

Process connections PMP75 (with diaphragm seal) (continued)

EN/DIN flanges with extended diaphragm seal, connection dimensions as per EN 1092-1/DIN 2527 and DIN 2501-1

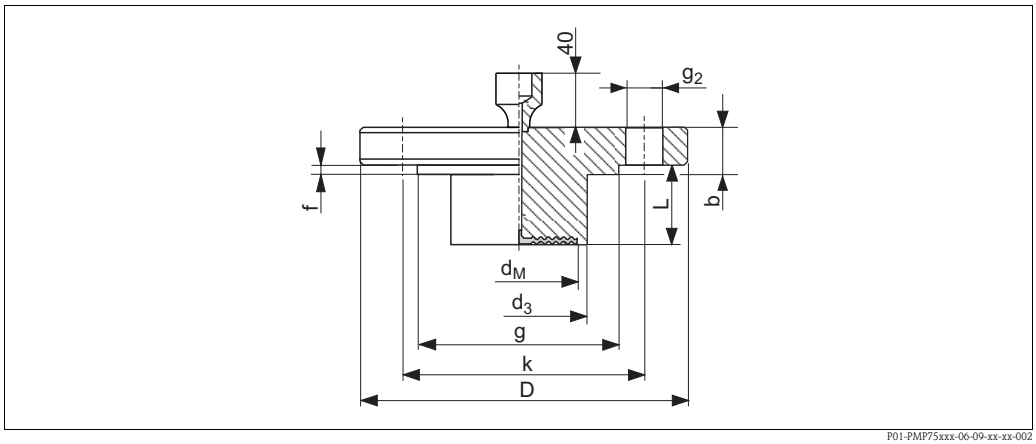

Process connection PMP75, EN/DIN flange with flush-mounted process isolating diaphragm, material AISI 316L

	Flange [1]							Boltholes			Diaphragm seal	
Version	**Nominal diameter**	**Nominal pressure**	**Shape[2]**	**Diameter**	**Thick-ness**	**Raised face**		**Quantity**	**Diameter**	**Hole circle**	**Max. diameter of the process isolating diaphragm**	**Diaphragm seal weight**
				D	**b**	**g**	**f**		**g_2**	**k**	**d_M**	
				[mm]	[mm]	[mm]	[mm]		[mm]	[mm]	[mm]	[kg]
D3 [3]	DN 50	PN 10-40	B1 (D)	165	20	102	3	4	18	125	47	[3]
D4 [3]	DN 80	PN 10-40	B1 (D)	200	24	138	3.5	8	18	160	72	[3]

1) The roughness of the surface in contact with the media, including the raised face of the flanges (all standards) made of Hastelloy C, Monel or tantalum, is Ra 0.8 µm (31.5 µin). Lower surface roughness on request.

2) Designation as per DIN 2527 in brackets

3) Available with 50 mm (1.97 in), 100 mm (3.94 in) and 200 mm (7.87 in) extended diaphragm seal, for extended diaphragm seal diameter and weight see the following table

Version	**Nominal diameter**	**Nominal pressure**	**Extended diaphragm seal length (L)**	**Extended diaphragm seal diameter d_3**	**Diaphragm seal weight**
			[mm]	[mm]	[kg]
D3	DN 50	PN 10-40	50 / 100 / 200	48.3	3.2 / 3.8 / 4.4
D4	DN 80	PN 10-40	50 /100 / 200	76	6.2 / 6.7 / 7.8

Process connections PMP75 (with diaphragm seal) (continued)

ANSI flanges, connection dimensions as per ANSI B 16.5, raised face RF

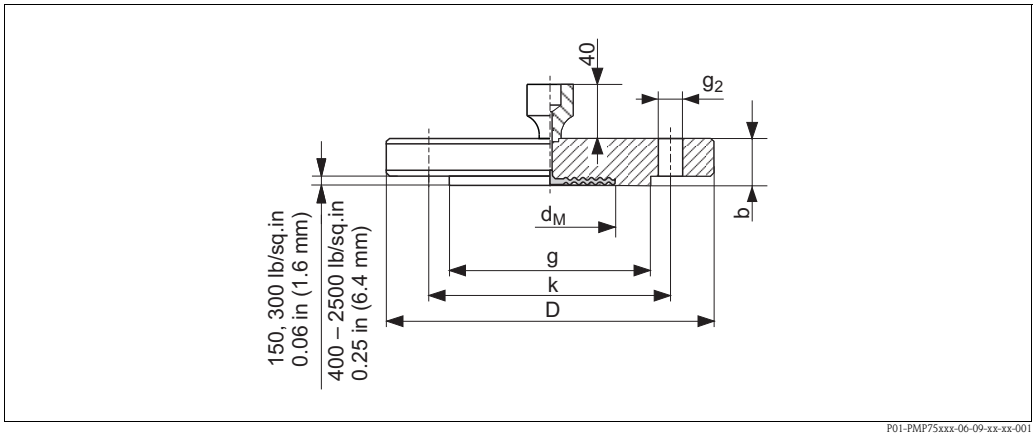

Process connection PMP75, ANSI flange, material AISI 316/316L (Combination of AISI 316 for required pressure resistance and AISI 316L for required chemical resistance (dual rated))

	Flange [1]					Boltholes			Diaphragm seal	
Version	**Nominal diameter**	**Class**	**Diameter**	**Thickness**	**Raised face**	**Quantity**	**Diameter**	**Hole circle**	**Max. diameter of the process isolating diaphragm**	**Diaphragm seal weight**
			D	**b**	**g**		**g_2**	**k**	**d_M**	
	[in]	[lb./sq.in]	[in (mm)]	[in (mm)]	[in (mm)]		[in (mm)]	[in (mm)]	[in (mm)]	[kg]
AC	1	150	4.25 (108)	0.56 (14.2)	2 (50.8)	4	0.62 (15.7)	3.12 (79.2)	1.26 (32)	1.2
AN	1	300	4.88 (124)	0.69 (17.5)	2 (50.8)	4	0.75 (19.1)	3.5 (88.9)	1.26 (32)	1.3
HC	1	400/600	4.88 (124)	0.69 (17.5)	2 (50.8)	4	0.75 (19.1)	3.5 (88.9)	1.26 (32)	1.4
HN	1	900/1500	5.88 (149.4)	1.12 (28.6)	2 (50.8)	4	1 (25.4)	4 (101.6)	1.26 (32)	3.2
HO	1	2500	6.25 (158.8)	1.38 (35.1)	2 (50.8)	4	1 (25.4)	4.25 (108)	1.26 (32)	4.6
AE	1 1/2	150	5 (127)	0.69 (17.5)	2.88 (73.2)	4	0.62 (15.7)	3.88 (96.6)	1.89 (48)	1.5
AQ	1 1/2	300	6.12 (155.4)	0.81 (20.6)	2.88 (73.2)	4	0.88 (22.4)	4.5 (114.3)	1.89 (48)	2.6
AF	2	150	6 (152.4)	0.75 (19.1)	3.62 (91.9)	4	0.75 (19.1)	4.75 (120.7)	2.32 (59)	2.2
AR	2	300	6.5 (165.1)	0.88 (22.4)	3.62 (91.9)	8	0.75 (19.1)	5 (127)	2.32 (59)	3.4
HF	2	400/600	6.5 (165.1)	1 (25.4)	3.62 (91.9)	8	0.75 (19.1)	5 (127)	2.32 (59)	4.3
HR	2	900/1500	8.5 (215.9)	1.5 (38.1)	3.62 (91.9)	8	1 (25.4)	6.5 (165.1)	2.32 (59)	10.3
H3	2	2500	9.25 (235)	2 (50.8)	3.62 (91.9)	8	1.12 (28.4)	6.75 (171.5)	2.32 (59)	15.8
AG	3	150	7.5 (190.5)	0.94 (23.9)	5 (127)	4	0.75 (19.1)	6 (152.4)	3.50 (89)	5.1
AS	3	300	8.25 (209.5)	1.12 (28.6)	5 (127)	8	0.75 (19.1)	6 (152.4)	3.50 (89)	7.0
AH	4	150	9 (228.6)	0.94 (23.9)	6.19 (157.2)	8	0.75 (19.1)	7.5 (190.5)	3.50 (89)	7.2
AT	4	300	10 (254)	1.25 (31.8)	6.19 (157.2)	8	0.88 (22.4)	7.88 (200.2)	3.50 (89)	11.7

1) The roughness of the surface in contact with the media, including the raised face of the flanges (all standards) made of Alloy C, Monel or tantalum, is Ra 0.8 µm (31.5 µin). Lower surface roughness on request.

ANSI flanges with extended diaphragm seal, connection dimensions as per ANSI B 16.5, raised face RF

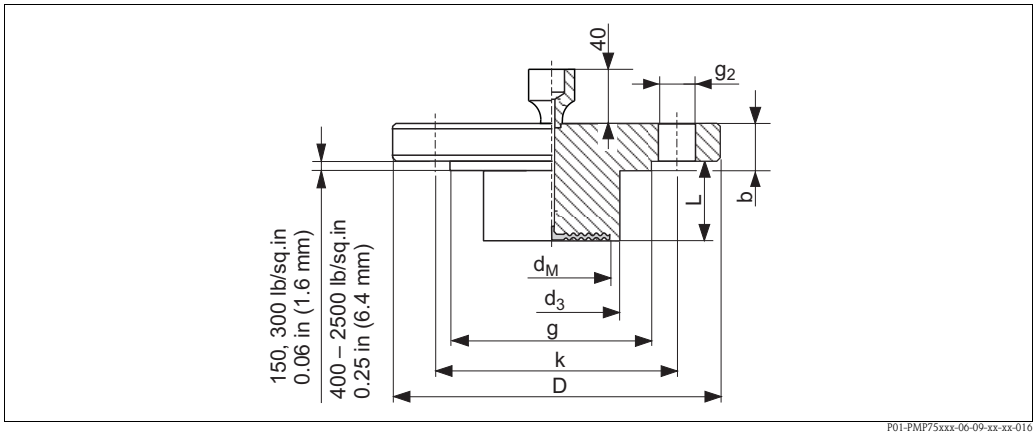

Process connection PMP75, ANSI flange, material AISI 316/316L (Combination of AISI 316 for required pressure resistance and AISI 316L for required chemical resistance (dual rated))

	Flange [1]					Boltholes			Diaphragm seal	
Version	**Nominal diameter** [in]	**Class** [lb./sq.in]	**Diameter D** [in (mm)]	**Thickness b** [in (mm)]	**Raised face g** [in (mm)]	**Quantity**	**Diameter g_2** [in (mm)]	**Hole circle k** [in (mm)]	**Max. diameter of the process isolating diaphragm d_M** [in (mm)]	**Diaphragm seal weight** [kg]
J3 [2]	2	150	6 (152.4)	0.75 (19.1)	3.62 (91.9)	4	0.75 (19.1)	4.75 (120.7)	1.85 (47)	[2]
J4 [2]	3	150	7.5 (190.5)	0.94 (23.9)	5 (127)	4	0.75 (19.1)	6 (152.4)	2.83 (72)	[2]
J7 [2]	3	300	8.25 (209.5)	1.12 (28.6)	5 (127)	8	0.88 (22.4)	6.62 (168.1)	2.83 (72)	[2]
J5 [2]	4	150	9 (228.6)	0.94 (23.9)	6.19 (157.2)	8	0.75 (19.1)	7.5 (190.5)	3.50 (89)	[2]
J8 [2]	4	300	10 (254)	1.25 (31.8)	6.19 (157.2)	8	0.88 (22.4)	7.88 (200.2)	3.50 (89)	[2]

1) The roughness of the surface in contact with the media, including the raised face of the flanges (all standards) made of Alloy C, Monel or tantalum, is Ra 0.8 µm (31.5 µin). Lower surface roughness on request.

2) Available with 2", 4", 6" or 8" extended diaphragm seal, for extended diaphragm seal diameter and weight see the following table

Version	**Nominal diameter** [in]	**Class** [lb./sq.in]	**Extended diaphragm seal length (L)** in (mm)	**Extended diaphragm seal diameter d_3** in (mm)	**Diaphragm seal weight** [kg]
J3	2	150	2 (50.8) / 4 (101.6) / 6 (152.4) / 8 (203.2)	1.9 (48.3)	3.0 / 3.4 / 3.9 / 4.4
J4	3	150	2 (50.8) / 4 (101.6) / 6 (152.4) / 8 (203.2)	2.99 (76)	6.0 / 6.6 / 7.1 / 7.8
J7	3	300	2 (50.8) / 4 (101.6) / 6 (152.4) / 8 (203.2)	2.99 (76)	7.9 / 8.5 / 9.0 / 9.6
J5	4	150	2 (50.8) / 4 (101.6) / 6 (152.4) / 8 (203.2)	3.7 (94)	8.6 / 9.9 / 11.2 / 12.4
J8	4	300	2 (50.8) / 4 (101.6) / 6 (152.4) / 8 (203.2)	3.7 (94)	13.1 / 14.4 / 15.7 / 16.9

Process connections PMP75 (with diaphragm seal) (continued)

JIS flanges, connection dimensions as per JIS B 2220 BL, raised face RF

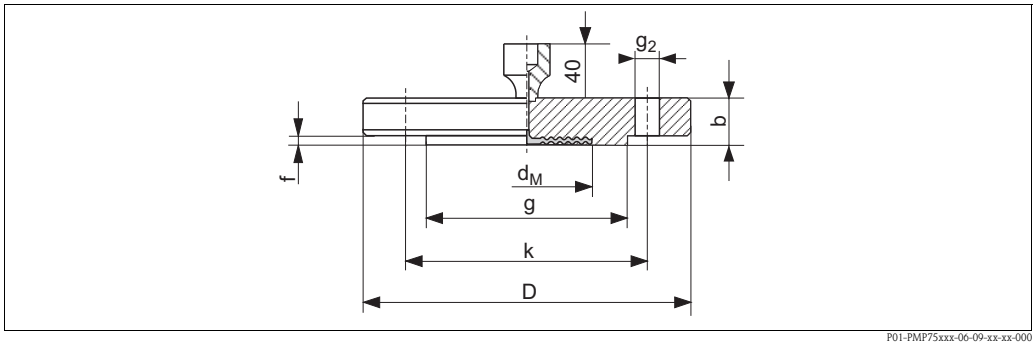

Process connection PMP75, JIS flange with raised face RF, material AISI 316L

	Flange [1]						Boltholes			Diaphragm seal	
Version	**Nominal diameter**	**Nominal pressure**	**Diameter** **D** [mm]	**Thickness** **b** [mm]	**Diameter raised face** **g** [mm]	**Raised face height** **f** [mm]	**Quantity**	**Diameter** **g_2** [mm]	**Hole circle** **k** [mm]	**Max. diameter of the process isolating diaphragm** **d_M** [mm]	**Diaphragm seal weight [2]** [kg]
KC	25 A	10 K	125	14	67	1	4	19	90	32	1.5
KF	50 A	10 K	155	16	96	2	4	19	120	59	2.3
KL	80 A	10 K	185	18	127	2	8	19	150	89	3.3
KH	100 A	10 K	210	18	151	2	8	19	175	89	4.4

1) The roughness of the surface in contact with the media, including the raised face of the flanges (all standards) made of Alloy C, Monel or tantalum, is Ra 0.8 µm (31.5 µin). Lower surface roughness on request.

2) Housing weight → 🗎 65

Process connections PMP75 (with diaphragm seal) (continued)

Thread 1/2 NPT and 1 NPT, separator

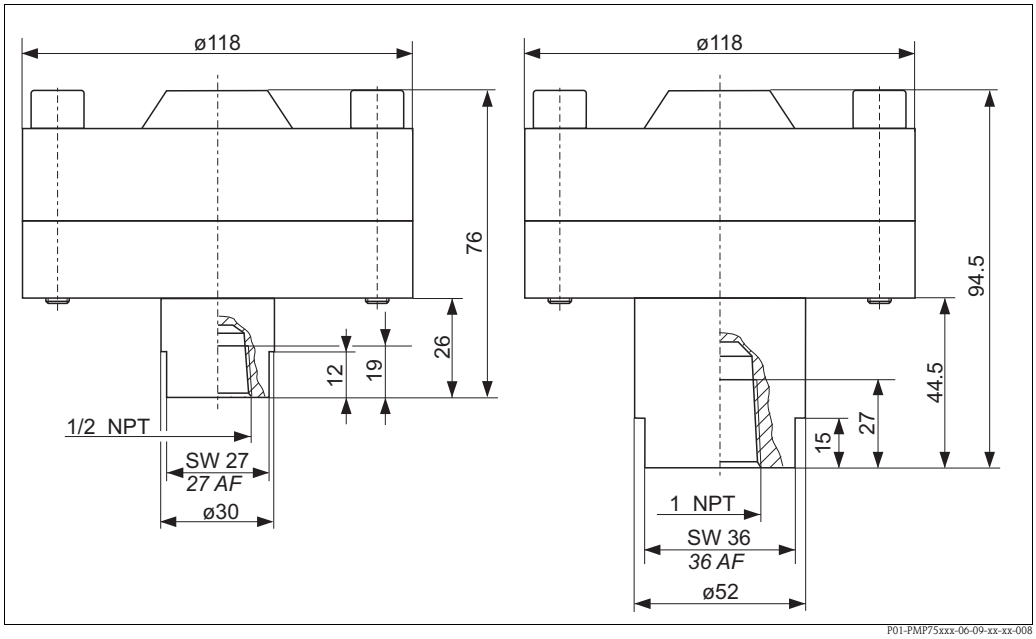

Process connection PMP75, versions "UG" and "UH", threaded, material AISI 316L, seal Viton

Version	Description	Nominal pressure	Diaphragm seal weight [kg]
UG	1/2 NPT	PN 250	4.75
UH	1 NPT	PN 250	5.0

Thread ISO 228 G 1/2 A and ANSI 1/2 MNPT, separator

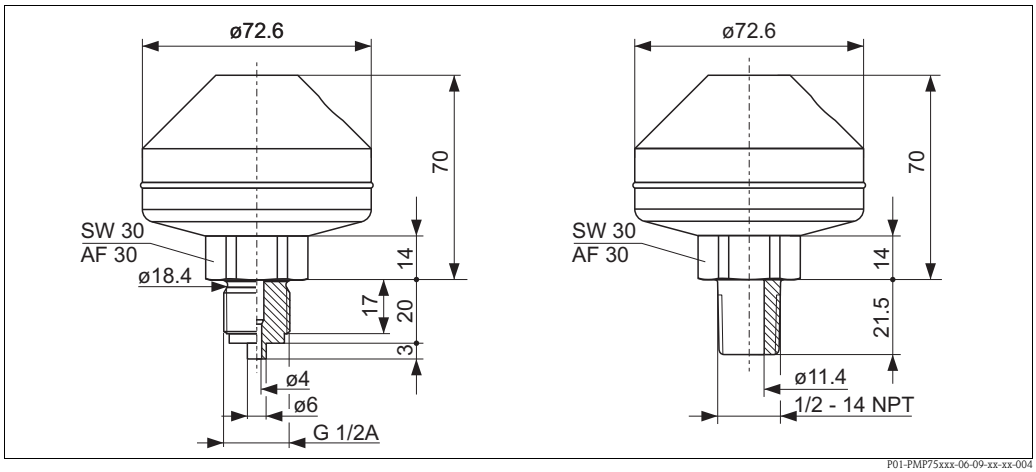

Process connection PMP75, versions "UA" and "UB", welded, material AISI 316L

Version	Description	Nominal pressure	Diaphragm seal weight [kg]
UA	ISO 228 G 1/2 A	PN 160	1.43
UB	ANSI 1/2 MNPT	PN 160	1.43

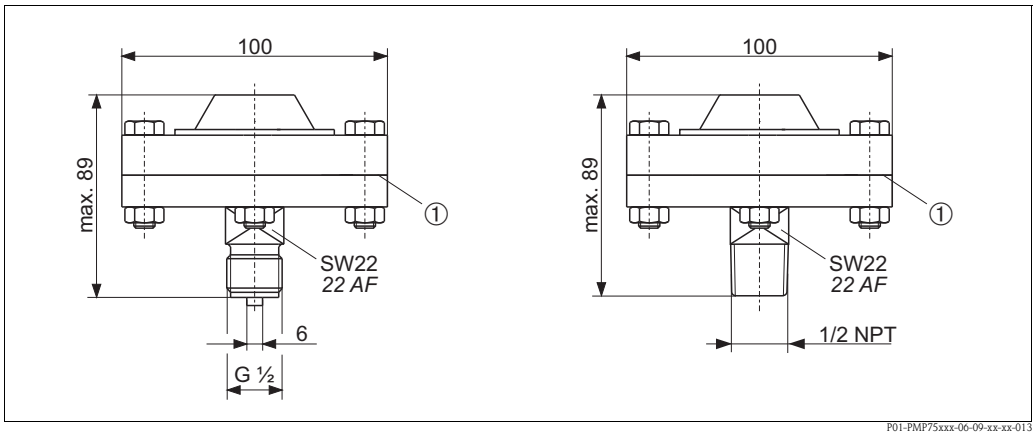

Process connection PMP75, left: version "UC" with threaded connection ISO 228 G 1/2 B, right: version "UD" with threaded connection ANSI 1/2 MNPT
Materials: AISI 316L (1.44.04), screws made of 1.4571

1 PTFE seal as standard max. 260 °C (500 °F) (higher temperatures on request)

Version	Measuring range	Description	Nominal pressure	Diaphragm seal weight [kg]
UC	≤ 40 bar	ISO 228 G 1/2 B	PN 40	1.43
UD	≤ 40 bar	ANSI 1/2 MNPT	PN 40	1.43

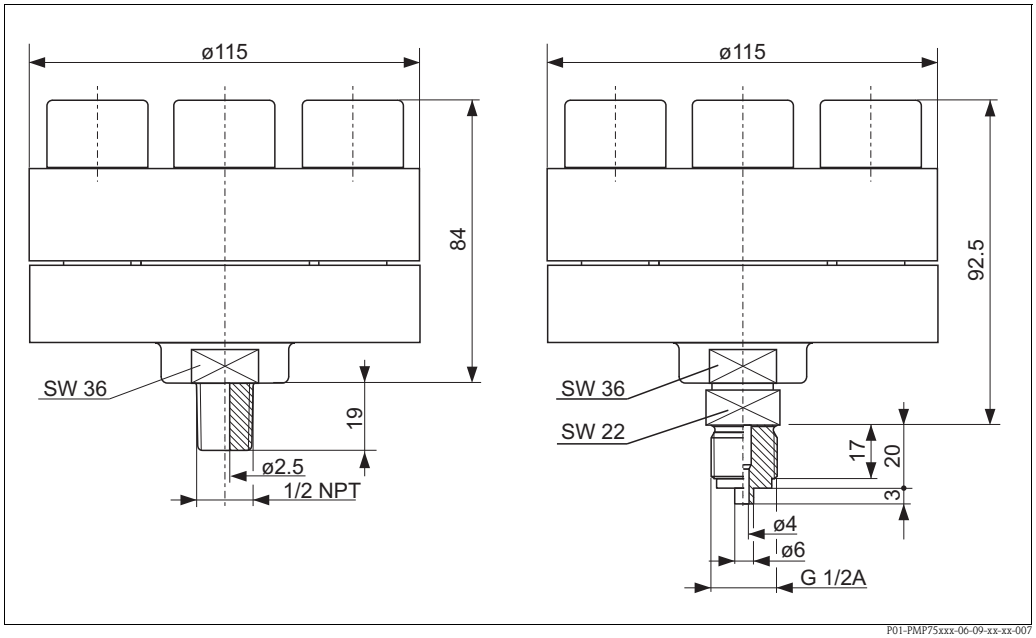

Process connection PMP75, versions "UC" and "UD", threaded, with integrated sealing lip
Materials: AISI 316L (1.44.04), screws made of 1.4571

Version	Measuring range	Description	Nominal pressure	Diaphragm seal weight [kg]
UC	> 40 bar	ISO 228 G 1/2 A	PN 400	4.75
UD	> 40 bar	ANSI 1/2 MNPT	PN 400	4.75

Process connections PMP75 (with diaphragm seal) (continued)

Universal adapter

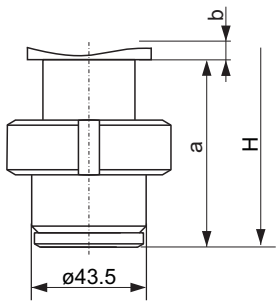

P01-PMP75xxx-06-09-xx-xx-014

Process connection PMP75, material: b = top section AISI 316L (1.4404), a = bottom section AISI 316L (1.4435); Surface roughness of the surfaces in contact with the media $R_a \leq 0.8$ µm (31.5 µin) as standard. Lower surface roughness on request.

Version 0 [1]: universal adapter incl. silicone molded seal FDA 21CFR177.2600/USP Class VI-70C, EHEDG, 3A

Installation height H for devices with universal adapter

Description	Device height H, universal adapter
T14 housing, optional display on the side	197 mm (7.76 in)
T17 housing, optional display on the side	213 mm (8.39 in)

1) Endress+Hauser supplies these slotted nuts in stainless steel AISI 304 (DIN/EN material number 1.4301) or in AISI 304L (DIN/EN material number 1.4307).

Wall and pipe mounting with mounting bracket

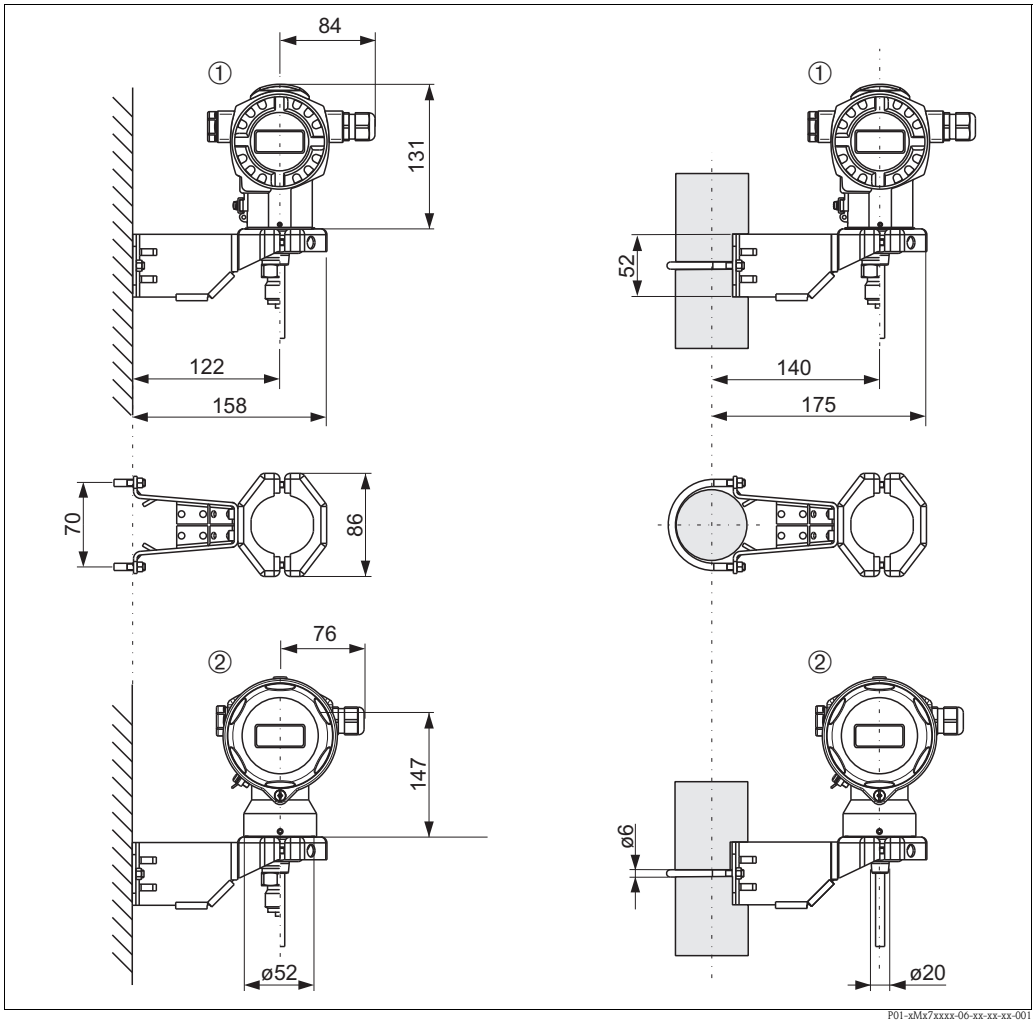

① *Dimensions of T14 housing, optional display on the side. For the weight, see the following section.*

② *Dimensions of T17 housing, optional display on the side. For the weight, see the following section.*

Weight

Housing

	T14		T17	Separate housing
	Aluminum	**AISI 316L**	**AISI 316L**	
With electronic insert and display	1.2 kg (2.65 lbs)	2.1 kg (4.63 lbs)	1.2 kg (2.65 lbs)	Weight of housing + 0.5 kg (1.10 lbs). Weight of sensor + 0.5 kg (1.10 lbs).
With electronic insert without display	1.1 kg (2.43 lbs)	2.0 kg (4.41 lbs)	1.1 kg (2.43 lbs)	

Process connections

- Process connections PMC71 (with ceramic process isolating diaphragm): → 36 ff
- Process connections PMP71 (with metallic process isolating diaphragm): → 43 ff
- Process connections PMP75 (with diaphragm seal): → 51 ff

Material (not wetted)

Housing

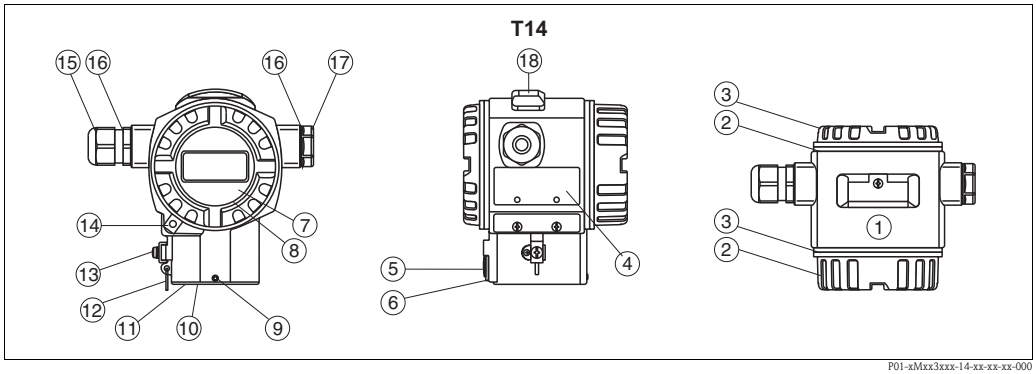

Front view, left-hand side view, top view

Item number	Component part	Material
1	T14 housing, RAL 5012 (blue)	Die-cast aluminum with protective powder-coating on polyester base
	T14 housing	Precision casting AISI 316L (1.4435)
2	Cover, RAL 7035 (gray)	Die-cast aluminum with protective powder-coating on polyester base
	Cover	Precision casting AISI 316L (1.4435)
3	Cover seal T14	EPDM or FVMQ
4	Nameplates	AISI 304 (1.4404)
5	Pressure compensation filter	PA6 GF10
6	Pressure compensation filter, O-ring	Silicone (VMQ)
7	Sight glass	Mineral glass
8	Sight glass seal	Silicone (VMQ)
9	Screw	A4
10	Sealing ring	EPDM
11	Snap ring	PA66-GF25
12	Snap ring for nameplates	AISI 304 (1.4301)/ AISI 316 (1.4401
13	External ground terminal	AISI 304 (1.4301)
14	Cover clamp	Clamp AISI 316L (1.4435, screw A4
15	Cable gland	Polyamide (PA) or CuZn nickel-plated
16	Seal of cable gland and blind plug	Silicone (VMQ)
17	Blind plug	PBT-GF30 FR, for dust ignition-proof: AISI 316L (1.4435)
18	External operation (keys and key cover), RAL 7035 (gray)	Polycarbonate PC-FR, screw A4
	Devices with MID parts certificate	
	Seal wire	DIN 1367-0 St/Zn (soft galvanized steel)
	Seals	Pb (lead)

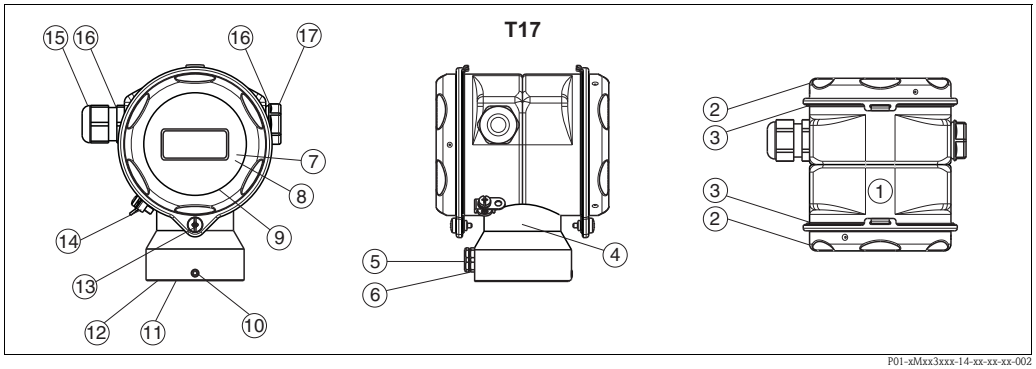

Front view, left-hand side view, top view

Item number	Component part	Material
1	T17 housing	AISI 316L (1.4404)
2	Cover	
3	Cover seal	EPDM
4	Nameplates	Lasered
5	Pressure compensation filter	PA6 GF10
6	Pressure compensation filter, O-ring	Silicone (VMQ)
7	Sight glass for non-hazardous area, ATEX Ex ia, NEPSI Zone 0/1 Ex ia, IECEx Zone 0/1 Ex ia, FM NI, FM IS, CSA IS	Polycarbonate (PC)
8	Sight glass for ATEX 1/2 D, ATEX 1/3 D, ATEX 1 GD, ATEX 1/2 GD, ATEX 3 G, FM DIP, CSA dust ignition-proof	Mineral glass
9	Sight glass seal	EPDM
10	Screw	A2-70
11	Sealing ring	EPDM
12	Snap ring	PA6
13	Screw	A4-50
14	External ground terminal	AISI 304 (1.4301)
15	Cable gland	Polyamide PA, for dust ignition-proof: CuZn nickel-plated
16	Seal of cable gland and blind plug	Silicone (VMQ)
17	Blind plug	PBT-GF30 FR, for dust ignition-proof: AISI 316L (1.4435)
	Devices with MID parts certificate	
	Seal wire	DIN 1367-0 St/Zn (soft galvanized steel)
	Seals	Pb (lead)

Connecting parts

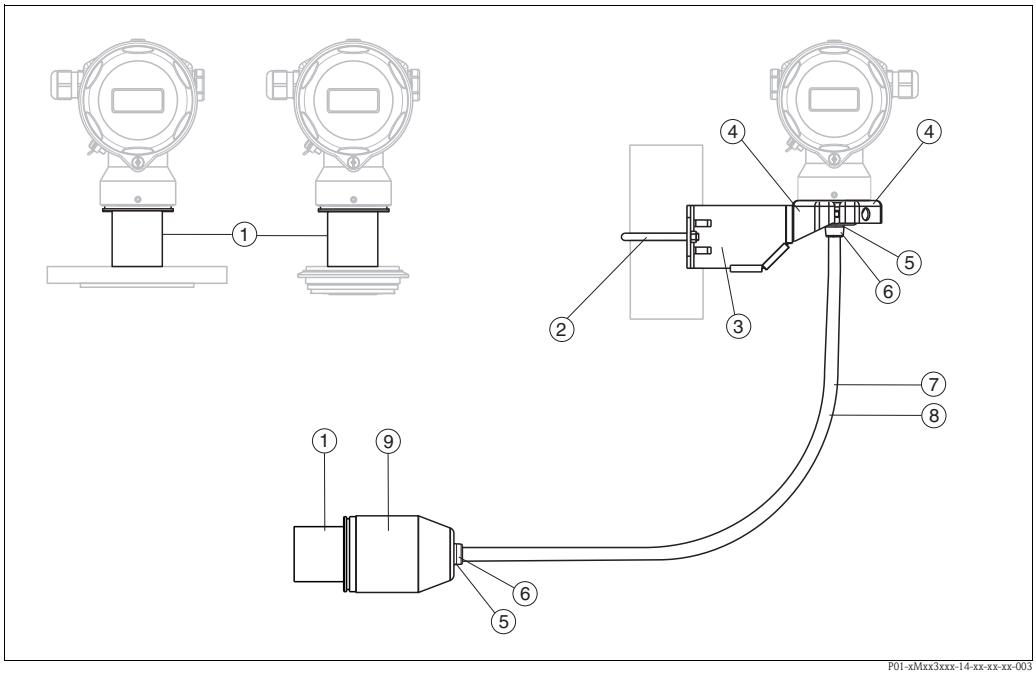

Front view, left-hand side view, top view

Item number	Component part	Material
1	Connection between the housing and process connection	AISI 316L (1.4404)
2	Mounting bracket	Bracket AISI 316L (1.4404)
3		Screw and nuts A4-70
4		Half-shells: AISI 316L (1.4404)
5	Seal for cable from separate housing	EPDM
6	Gland for cable from separate housing	AISI 316L (1.4404)
7	PE cable for separate housing	Abrasion-proof cable with strain-relief Dynema members; shielded using aluminum-coated film; insulated with polyethylene (PE-LD), black; copper wires, twisted, UV-resistant
8	FEP cable for separate housing	Abrasion-proof cable; shielded using galvanized steel wire netting; insulated with fluorinated ethylene propylene (FEP), black; copper wires, twisted, UV-resistant
9	Process connection adapter for separate housing	AISI 316L (1.4404)

Filling oil

See "Ordering information" (→ 82)

Miscellaneous:

- Diaphragm seal capillary: AISI 316 Ti (1.4571)
- Protective hose for diaphragm seal capillary: AISI 304 (1.4301)

Material (wetted)

Note!
Process-wetted device components are listed in the "Mechanical construction" (→ 35) and "Ordering information" (→ 82) sections.

TSE Certificate of Suitability (Transmissible Spongiform Encephalopathy)

The following applies to all process wetted device components:
- They do not contain any materials derived from animals.
- No additives or operating materials derived from animals are used in production or processing.

Process connections

- "Clamp connections" and "Hygienic connections" (see also "Ordering information" section): AISI 316L (DIN/EN material number 1.4435)
- Endress+Hauser supplies process connections with threaded connections and DIN/ EN flanges made of stainless steel as per AISI 316L (DIN/EN material number 1.4404 (AISI 316) or 14435). With regard to their stability-temperature property, the materials 1.4404 and 1.4435 are grouped together under 13E0 in EN 1092-1 Tab.18. The chemical composition of the two materials can be identical.
- Some process connections are also available in the material Alloy C276 (DIN/EN material number 2.4819). See the information in the "Mechanical construction" section.

Process isolating diaphragm

- PMC71: Al_2O_3 aluminum oxide ceramic (FDA 21CFR186.1256, USP Class VI), ultrapure 99.9 % (→ see also www.endress.com/ceraphire)
- PMP71:
  - AISI 316L (DIN/EN material number 1.4435)
  - AISI 316L with gold-rhodium coating
  - Alloy C276 (DIN/EN material number 2.4819)
- PMP75:
  - AISI 316L (DIN/EN material number 1.4435)
  - AISI 316L with gold-rhodium coating
  - AISI 316L with 0.25 mm PTFE foil (not for vacuum applications)
  - Alloy C276 (DIN/EN material number 2.4819)
  - Monel
  - Tantalum

Seals

See ordering information, → 82 ff

Human interface

Operating elements

Onsite display (optional)

A 4-line liquid crystal display (LCD) is used for display and operation. The onsite display shows measured values, dialog text as well as fault and notice messages in plain text, thereby supporting the user in every stage of operation. The display of the device can be turned in 90° steps.
Depending on the installation position of the device, this makes it easy to operate the device and read the measured value.

Functions:
- 8-digit measured value display including sign and decimal point, bar graph for
  - 4 to 20 mA HART as current display
  - PROFIBUS PA as graphic display of the standardized value of the AI Block
  - FOUNDATION Fieldbus as graphic display of the transducer output.
- Simple and complete menu guidance thanks to separation of the parameters into several levels and groups.
- Menu guidance up to 8 languages
- Each parameter is given a 3-digit ID number for easy navigation.
- Option for configuring the display according to individual requirements and preferences, such as language, alternating display, display of other measured values such as sensor temperature, contrast setting.
- Comprehensive diagnostic functions (fault and warning message, peak-hold indicators, etc.).
- Rapid and safe commissioning with the Quick Setup menus.

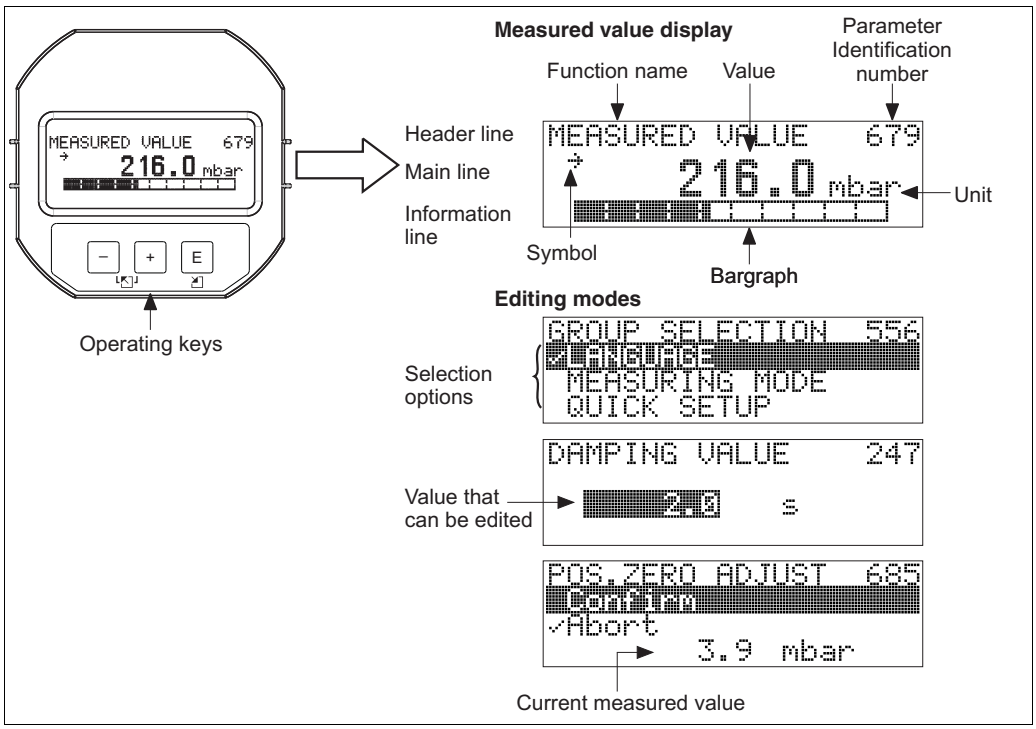

P01-xxxxxxxx-07-xx-xx-en-011

Operating elements

Operating keys on the exterior of the device

With the T14 housing (aluminum or stainless steel), the operating keys are located either outside of the housing, under the protection cap or inside on the electronic insert. With the T17 housing (stainless steel), the operating keys are located inside the housing on the electronic insert.

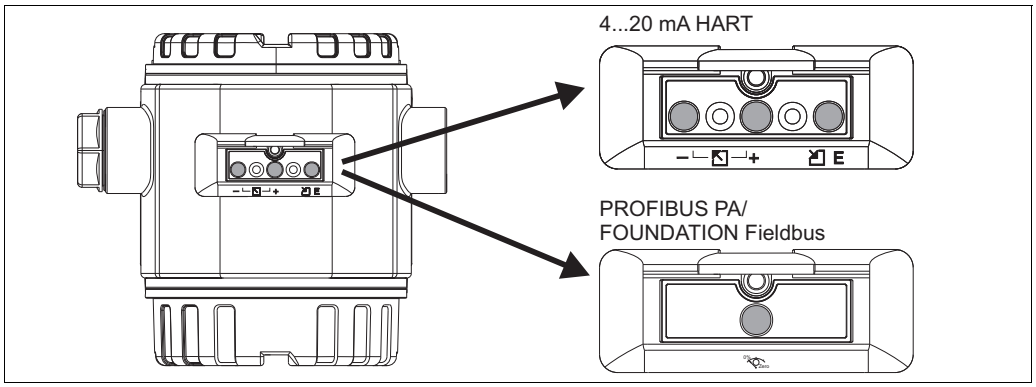

P01-PMx7xxxx-19-xx-xx-xx-038

The operating keys located externally on the device work on the Hall sensor principle. As a result, no additional openings are required in the device. This guarantees:
- Complete protection against environmental influences such as moisture and contamination.
- Simple operation without any tools.
- No wear.

Operating keys and elements located internally on the electronic insert

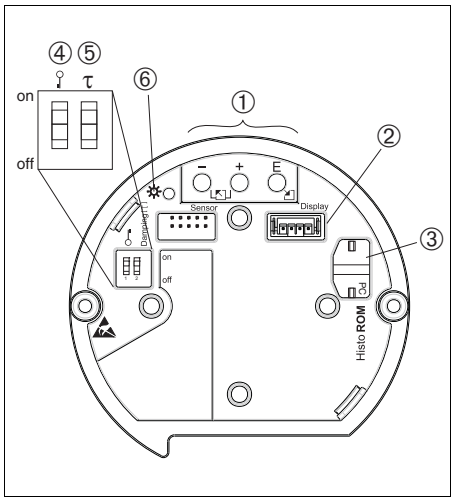

P01-xxxxxxxx-19-xx-xx-xx-104

Electronic insert HART

1 *Operating keys*
2 *Slot for optional display*
3 *Slot for optional HistoROM®/M-DAT*
4 *DIP-switch for locking/unlocking parameters relevant to the measured values*
5 *DIP-switch for damping on/off*
6 *Green LED to indicate value being accepted*

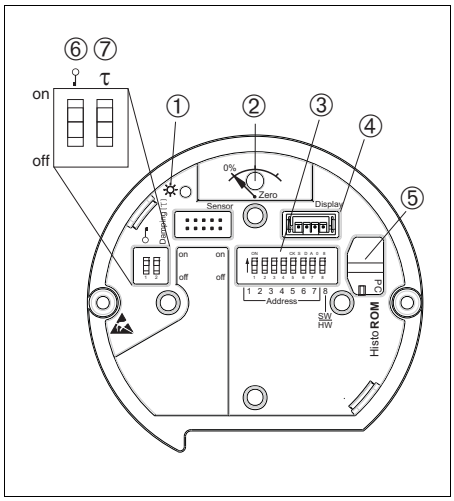

P01-xxxxxxxx-19-xx-xx-xx-105

Electronic insert PROFIBUS PA

1 *Green LED to indicate value being accepted*
2 *Key for position adjustment and device reset*
3 *DIP-switch for bus address*
4 *Slot for optional display*
5 *Slot for optional HistoROM®/M-DAT*
6 *DIP-switch for locking/unlocking parameters relevant to the measured values*
7 *DIP-switch for damping on/off*

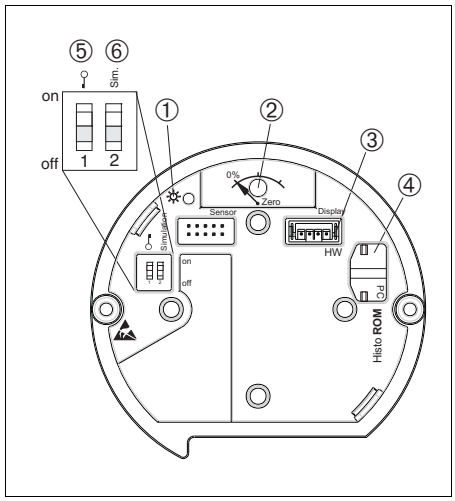

P01-xxxxxxxx-19-xx-xx-xx-106

Electronic insert FOUNDATION Fieldbus

1 *Green LED to indicate value being accepted*
2 *Key for position adjustment and device reset*
3 *Slot for optional display*
4 *Slot for optional HistoROM®/M-DAT*
5 *DIP-switch for locking/unlocking parameters relevant to the measured values*
6 *DIP-switch for simulation mode on/off*

Local operation

Function	External operation (operating keys, optional, not T17 housing)	Internal operation (electronic insert)	Display (optional)
Position adjustment (zero point correction)	X	X	X
Setting lower-range value and upper-range value – reference pressure present at the device	X (HART only)	X (HART only)	X
Device reset	X	X	X
Locking and unlocking parameters relevant to the measured value	---	X	X
Value acceptance indicated by green LED	X	X	X
Switching damping on and off	---	X (HART and PA only)	X
Setting bus address (PA)	---	X	X
Switching simulation mode on and off (FOUNDATION Fieldbus)	---	X	X

Remote operation

Depending on the position of the write protection switch on the device, all software parameters are accessible.

HART

Remote operation via:
- FieldCare (see "Hardware and software for onsite and remote operation" section → 73 ff) with Commubox FXA195 (see "Hardware and software for onsite and remote operation" section → 73 ff)
- Field Xpert SFX100 (see "Hardware and software for onsite and remote operation" section → 73)

PROFIBUS PA

Remote operation via:
- FieldCare (see "Hardware and software for onsite and remote operation" section → 73 ff)
  - Profiboard: For connecting a PC to PROFIBUS
  - Proficard: For connecting a laptop to PROFIBUS

FOUNDATION Fieldbus

Remote operation via:
- Use an FF-configuration program for example NI-FBUS Configurator, to
  - connect devices with "FOUNDATION Fieldbus signal" into an FF-network
  - set FF-specific parameters

  Operation with NI-FBUS Configurator:
  The NI-FBUS Configurator is an easy-to-use graphical environment for creating linkages, loops, and a schedule based on the fieldbus concepts.
  You can use the NI-FBUS Configurator to configure a fieldbus network as follows:
  - Set block and device tags
  - Set device addresses
  - Create and edit function block control strategies (function block applications)
  - Configure vendor-defined function and transducer blocks
  - Create and edit schedules
  - Read and write to function block control strategies (function block applications)
  - Invoke Device Description (DD) methods
  - Display DD menus
  - Download a configuration
  - Verify a configuration and compare it to a saved configuration
  - Monitor a downloaded configuration
  - Replace a virtual device by a real device
  - Save and print a configuration
- Field Xpert SFX100 (see "Hardware and software for onsite and remote operation" section → 73)

Note!

For further information please contact your local Endress+Hauser Sales Center.

Hardware and software for onsite and remote operation

Commubox FXA195

For intrinsically safe HART communication with FieldCare via the USB interface. For details refer to TI404F/00/EN.

Commubox FXA291

The Commubox FXA291 connects Endress+Hauser field devices with a CDI interface (=Endress+Hauser Common Data Interface) to the USB interface of a personal computer or a notebook. For details refer to TI405C/07/EN.

Note!
For the following Endress+Hauser devices you need the "ToF adapter FXA291" as an additional accessory:

- Cerabar S PMC71, PMP7x
- Deltabar S PMD7x, FMD7x
- Deltapilot S FMB70

ToF adapter FXA291

The ToF adapter FXA291 connects the Commubox FXA291 with devices of the ToF platform, pressure equipment and the Gammapilot via the USB port of a computer or laptop. For details refer to KA271F.

Field Xpert SFX100

Field Xpert is an industrial PDA with integrated 3.5" touchscreen from Endress+Hauser based on Windows Mobile. It communicates via wireless with the optional VIATOR Bluetooth modem or wireless via WiFi and Endress+Hauser's Fieldgate FXA520. Field Xpert also works as a stand-alone device for asset management applications. For details, refer to BA00060S/04/EN.

HistoROM®/M-DAT (optional)

HistoROM®/M-DAT is a memory module which can be attached to every electronic insert. The HistoROM®/M-DAT can be retrofitted at any stage (order number: 52027785).

Your benefits

- Quick and safe commissioning of the same measuring points by copying the configuration data of one transmitter to another transmitter.
- Reliable process monitoring thanks to cyclical recording of pressure and sensor temperature measured values.
- Simple diagnosis by recording diverse events such as alarms, configuration changes, counters for measuring range undershoot and overshoot for pressure and temperature as well as user limit overshoot and undershoot for pressure and temperature etc.
- Analysis and graphic evaluation of the events and process parameters via software (contained in scope of supply).

HistoROM®/M-DAT can be ordered via feature 100 "Additional option 1" or feature 110 "Additional option 2" or as a spare part. → 🗎 82 ff. A CD with an Endress+Hauser operating program is also included in the scope of delivery.
You can copy data from one transmitter to another transmitter when operating a FOUNDATION Fieldbus device via an FF configuration program. You need the Endress+Hauser FieldCare operating program and the Commubox FXA291 service interface and the ToF adapter FXA291 to be able to access the data and events saved in the HistoROM®/M-DAT.
FieldCare and the service interface Commubox FXA291 and the ToF adapter FXA291.

FieldCare

FieldCare is an Endress+Hauser asset management tool based on FDT technology. With FieldCare, you can configure all Endress+Hauser devices as well as devices from other manufacturers that support the FDT standard.

FieldCare supports the following functions:
- Configuration of transmitters in offline and online mode
- Loading and saving device data (upload/download)
- HistoROM®/M-DAT analysis
- Documentation of the measuring point

Connection options:
- HART via Commubox FXA195 and the USB port on a computer
- PROFIBUS PA via segment coupler and PROFIBUS interface card
- Service interface with Commubox FXA291 and ToF adapter FXA291 (USB).

For further information → www.endress.com

Planning instructions, diaphragm seal systems

Note!
The performance and the permitted range of application of a diaphragm seal system depend on the process isolating diaphragm used, the filling oil, the coupling, the unit design and on the process and ambient conditions present in the individual application.
To help you select the right diaphragm seal system for your applications, Endress+Hauser provides its customers with the free "Applicator Sizing Diaphragm Seal" tool, which is available on CD or online at "www.endress.com/applicator".

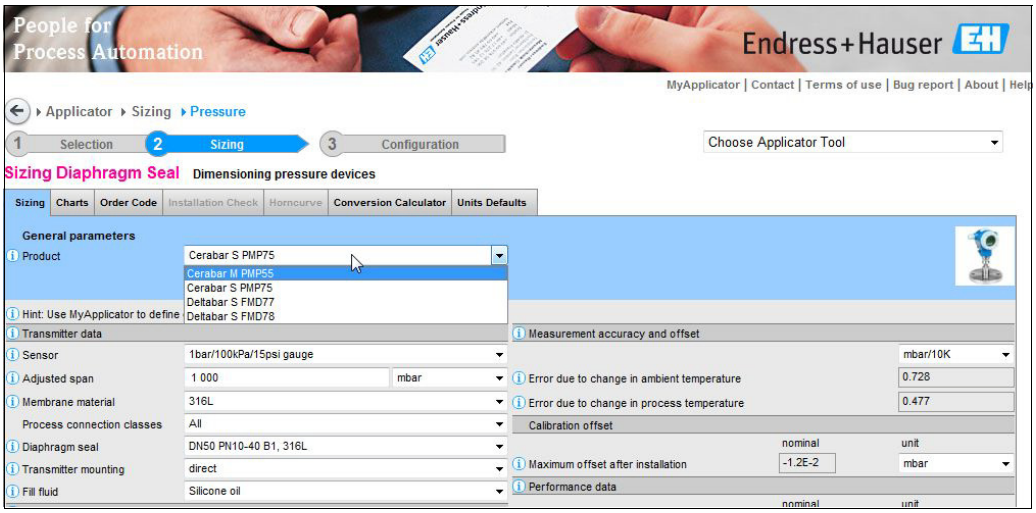

Applicator Sizing Diaphragm Seal PMP75-en

For more detailed information or the layout of the optimum diaphragm seal solution for your application, please contact your local Endress+Hauser Sales Center.

Applications

Diaphragm seal systems should be used if the process and the device should be separated. Diaphragm seal systems offer clear advantages in the following instances:
- In the case of extreme process temperatures
- For aggressive media
- In the case of process media that crystallize
- In the case of corrosive or highly various process media or process media with solids content
- In the case of heterogeneous and fibrous process media
- If extreme measuring point cleaning is necessary, or for very humid mounting locations
- If the measuring point is exposed to severe vibrations
- For mounting locations that are difficult to access

Design and operation mode

Diaphragm seals are separating equipment between the measuring system and the process.

A diaphragm seal system consists of:
- A diaphragm seal
- A capillary tube or temperature isolator if necessary
- Fill fluid
- A pressure transmitter

The process pressure acts via the process isolating diaphragm of a diaphragm seal on the liquid-filled system, which transfers the process pressure onto the sensor of the pressure transmitter.
Endress+Hauser delivers all diaphragm seal systems as welded versions. The system is hermetically sealed, which ensures the highest reliability.

The diaphragm seal determines the application range of the system by:
- The process isolating diaphragm diameter
- The process isolating diaphragm stiffness and material
- The design (oil volume)

Diameter of the process isolating diaphragm

The greater the diameter of the process isolating diaphragm (less stiff), the smaller the temperature effect on the measurement result.

Process isolating diaphragm stiffness

The stiffness depends on the diameter of the process isolating diaphragm, the material, any existing coating and the thickness and shape of the process isolating diaphragm. The process isolating diaphragm thickness and the shape are determined by the design. The stiffness of a process isolating diaphragm of a diaphragm seal influences the temperature operating range and the measuring error caused by temperature effects.

Capillary

Capillaries with an internal diameter of 1 mm (0.04 in) are used as standard.
The capillary tube influences the thermal change, the ambient temperature operating range and the response time of a diaphragm seal system as a result of its length and internal diameter.

Filling oil

When selecting the filling oil, the media and ambient temperature as well as the operating pressure are of crucial importance. Observe the temperatures and pressures during commissioning and cleaning. A further selection criterion is the compatibility of the filling oil with the requirements of the process media. For this reason, only filling oils that are harmless to health are used in the food industry, such as vegetable oil or silicone oil.
→ See also the following section "Diaphragm seal filling oils".
The filling oil used influences the thermal change, the temperature operating range of a diaphragm seal system and the response time. A temperature change results in a volume change of the filling oil. The volume change is dependent on the expansion coefficient and the volume of the filling oil at calibration temperature (constant in the range: +21 to +33 °C (+70 to 91 °F)).
For example, the filling oil expands in the event of a temperature increase. The additional volume presses against the process isolating diaphragm of a diaphragm seal. The stiffer a diaphragm is, the greater its return force, which counteracts a volume change and acts on the measuring cell together with the operating pressure, thus shifting the zero point.

Pressure transmitter

The pressure transmitter influences the temperature operating range, the T_K zero point and the response time as a result of its volume change. The volume change is the volume that has to be shifted to pass through the complete measuring range.
Pressure transmitters from Endress+Hauser are optimized with regard to minimum volume change.

Diaphragm seal filling oils

Version [1]	Filling oil	Permissible temperature range [2] at 0.05 bar (0.725 psi) ≤ p_{abs} ≤ 1 bar (14.5 psi)	Permissible temperature range [2] at p_{abs} ≥ 1 bar (14.5 psi)	Density [g/cm³] / [SGU]	Viscosity [mm²/s] / [cSt] at 25 °C (77 °F)]	Coefficient of thermal expansion [1/K]	Notes
A, H, 1 or 2	Silicone oil	–40 to +180°C (–40 to +356°F)	–40 to +250°C (–40 to +482 °F)	0.96	100	0.00096	Suitable for foods FDA 21 CFR 175.105
G, 3 or 4	High-temperature oil	–10 to +200°C (+14 to +392 °F)	–10 to +400°C (+14 to +752 °F)	1.07	37	0.0007	High temperatures
F or N	Inert oil	–40 to +80°C (–40 to +176 °F)	–40 to +175°C (–40 to +347 °F)	1.87	27	0.000876	For ultrapure gas and oxygen applications
D, 5 or 6	Vegetable oil	–10 to +120°C (+14 to +248 °F)	–10 to +200°C (+14 to +392 °F)	0.94	9.5	0.00101	Suitable for foods FDA 21 CFR 172.856
7 or 8	Low-temperature oil	–70 to +80°C (–94 to +176 °F)	–70 to +180°C (–94 to +356 °F)	0.92	4.4	0.00108	Low temperatures

1) Version for feature 90 in the order code (→ 🗎 89 ff)

2) Observe temperature limits of the device (→ 🗎 33) and the system (→ 🗎 75).

Cleaning instructions

- Endress+Hauser offer flushing rings as accessories to clean process isolating diaphragms without taking the transmitters out of the process.
  For further information please contact your local Endress+Hauser Sales Center.
- We recommend you perform CIP (cleaning in place (hot water)) before SIP (sterilization in place (steam)) for pipe diaphragm seals.
  A frequent use of sterilization in place (SIP) will increase the stress on the process isolating diaphragm. Under unfavorable circumstances in the long term view we cannot exclude that a frequent temperature change could lead to a material fatigue of the process isolating diaphragm and possibly to a leakage.

Installation instructions

Diaphragm seal systems

- The diaphragm seal together with the transmitter form a closed, calibrated system, which is filled through ports in the diaphragm seal and in the measuring system of the transmitter. These ports are sealed and must not be opened.
- For devices with a temperature isolator or capillary, a suitable fastening device (mounting bracket) is recommended.
- For more detailed installation instructions, Endress+Hauser provides its customers with the free "Applicator Sizing Diaphragm Seal" tool, which is available on CD or can be downloaded online at "www.endress.com/applicator".

Capillary

In order to obtain more precise measurement results and to avoid a defect in the device, mount the capillaries as follows:
- vibration-free (in order to avoid additional pressure fluctuations)
- not in the vicinity of heating or cooling lines
- insulate if the ambient temperature is below or above the reference temperature
- with a bending radius of ≥ 100 mm (3.94 in).
- When using diaphragm seal systems with capillaries, sufficient strain relief must be allowed for in order to prevent the capillary bending down (capillary bending radius ≥ 100 mm (3.94 in)).
- In the case of devices with diaphragm seals and capillaries, the zero point shift caused by the hydrostatic pressure of the filling liquid column in the capillaries must be taken into account when selecting the measuring cell. If a measuring cell with a small measuring range is selected, a position adjustment can cause range violation.

Vacuum applications

For applications under vacuum, Endress+Hauser recommends mounting the pressure transmitter below the diaphragm seal. This prevents vacuum load of the diaphragm seal caused by the presence of fill fluid in the capillary.
When the pressure transmitter is mounted above the diaphragm seal, the maximum height difference H1 in accordance with the illustration below must not be exceeded. The maximum height difference is dependent on the density of the filling oil and the smallest ever pressure that is permitted to occur at the diaphragm seal (empty tank), see the following illustration, on the right.

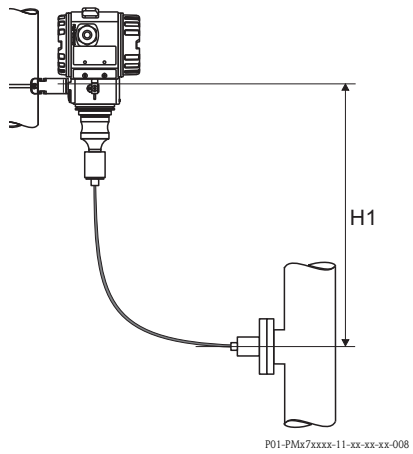

Installation above the diaphragm seal

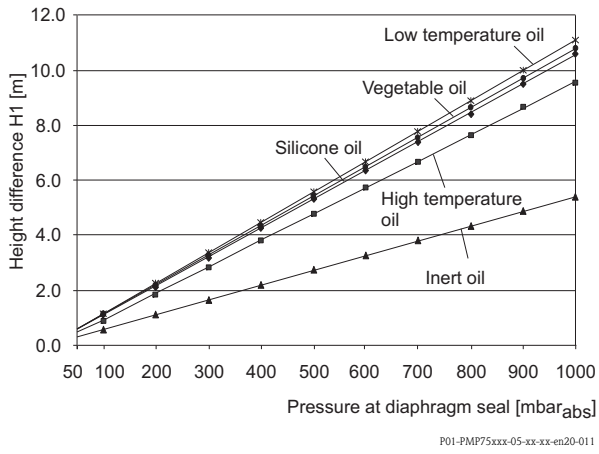

Diagram of maximum installation height above the diaphragm seal for vacuum applications

Heat insulation

The PMP75 must only be insulated up to a certain height. The maximum permitted insulation height is indicated on the devices and applies to an insulation material with a heat conductivity ≤ 0.04 W/(m x K) and to the maximum permitted ambient and process temperature. The data were determined under the most critical application "quiescent air".

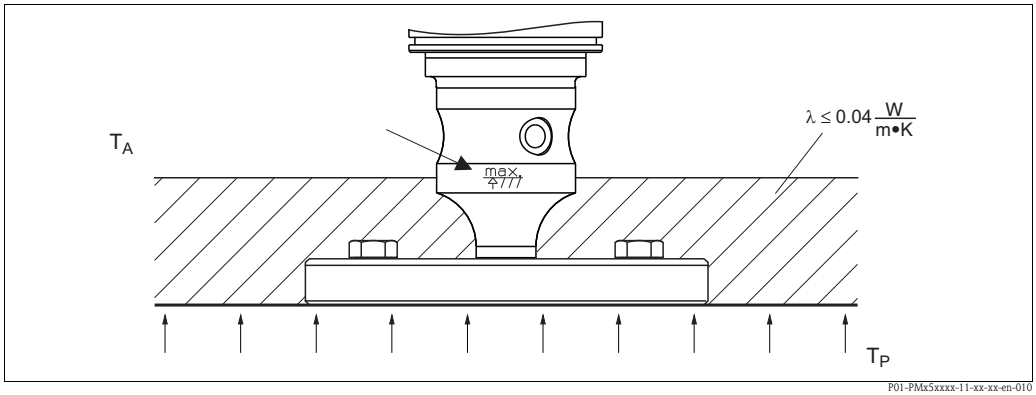

Maximum insulation height, here indicated on a PMP75 with a flange

Mounting with temperature isolator

Endress+Hauser recommends the use of temperature isolators in the event of constant extreme media temperatures which cause the maximum permissible electronics temperature of +85 °C (185 °F) to be exceeded. Depending on the filling oil used, diaphragm seal systems with temperature isolators can be used for maximum temperatures of up to 260 °C (500 °F). → Temperature application limits, see → 77, "Diaphragm seal filling oils" section. To minimize the influence of rising heat, Endress+Hauser recommends the device be mounted horizontally or with the housing pointing downwards.
The additional installation height also brings about a zero point shift of maximum 21 mbar (0.315 psi) due to the hydrostatic column in the temperature isolator. You can correct this zero point shift at the device.

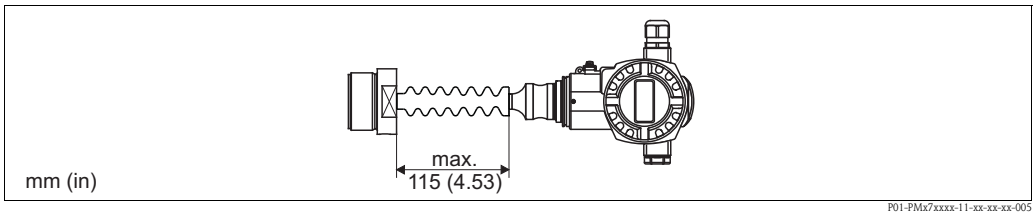

PMP75 with temperature isolator, material 316L (1.4404)

Certificates and approvals

CE mark

The device meets the legal requirements of the relevant EC directives.
Endress+Hauser confirms that the device has been successfully tested by applying the CE mark.

Ex approvals

- ATEX
- FM
- CSA
- NEPSI
- IECEx
- TIIS
- GOST
- Also combinations of different approvals

All explosion protection data are given in separate documentation which is available upon request. The Ex documentation is supplied as standard with all devices approved for use in explosion hazardous areas.
→ 🗎 94 ff, "Safety Instructions" and "Installation/Control Drawings" sections.

Suitability for hygienic processes

The Cerabar S is suitable for use in hygienic processes.
Overview of suitable process connections from Page 36.
Many versions meet the requirements of 3A-Sanitary Standard No. 74 and are certified by the EHEDG.
Suitable fittings and seals must be used to ensure hygiene-compliant design according to the specifications of 3A and EHEDG.

Note!
The gap-free connections can be cleaned without residue using the usual cleaning methods.

Marine certificate

- GL
- ABS

Functional safety SIL/ IEC 61508 Declaration of Conformity (optional)

The Cerabar S devices with a 4 to 20 mA output signal have been developed in accordance with the IEC 61508 standard. These devices can be used to monitor the process level and pressure up to SIL 3.
For a detailed description of the safety functions with Cerabar S, settings and functional safety data, see the "Functional safety manual – Cerabar S" SD00190P.
For devices up to SIL 3 / IEC 61508 Declaration of Conformity, see → 🗎 82 ff, feature 100 "Additional option 1" and feature 110 "Additional option 2" version E "SIL / IEC 61508 Declaration of Conformity".

Overfill prevention

WHG: ZE00260P/00/DE

CRN approvals

Some device versions have CRN approval. For a CRN-approved device, a CRN-approved process connection (→ 🗎 35 ff, "Process connection") has to be ordered with a CSA approval (→ 🗎 82 ff, feature 10 "Approval").
PMP75 devices with a capillary are not CRN-approved. These devices are fitted with a separate plate bearing the registration number 0F10525.5C.

Pressure Equipment Directive (PED)

The devices PMC71, PMP71 and PMP75 correspond to Article 3 (3) of the EC directive 97/23/EC (Pressure Equipment Directive) and have been designed and manufactured according to good engineering practice.

The following also applies:
– PMP71 with threaded connection and internal process isolating diaphragm PN > 200 as well as oval flange adapter PN > 200:
  Suitable for stable gases in group 1, category I
– PMP75 with pipe diaphragm seal ≥ 1.5"/PN 40:
  Suitable for stable gases in group 1, category II
– PMP75 with separators PN > 200 ≥ 1.5"/PN40:
  Suitable for stable gases in group 1, category I
– PMP75 with threaded connection PN > 200

Drinking water approval

PMC71/PMP71: NSF 61 approval

Standards and guidelines

DIN EN 60770 (IEC 60770):
Transmitters for use in industrial-process control systems
Part 1: Methods for performance evaluation

DIN 16086:
Electrical pressure measuring instruments, pressure sensors, pressure transmitters, pressure measuring instruments, concepts, specifications on data sheets

EN 61326-X:
EMC product family standard for electrical equipment for measurement, control and laboratory use.

WELMEC guide 8.8 “General and Administrative Aspects of the Voluntary System of Modular Evaluation of Measuring instruments under the MID”.

OIML R117-1 Edition 2007 (E) “Dynamic measuring systems for liquids other than water”.

EN 12405-1/A1 Edition 2006 “Gas meters – Conversion devices – Part 1: Volume conversion”.

Approvals for custody transfer

All aspects of OIML R117-1 Edition 2007 (E) and EN 12405-1/A1 Edition 2006 are fulfilled.

MID Parts Certificate

TC7975

Classification of process sealing between electrical systems and (flammable or combustible) process fluids in accordance with ANSI/ISA 12.27.01

Endress+Hauser devices are designed in accordance with ANSI/ISA 12.27.01. allowing the user to waive the use and save the cost of installing external secondary process seals in the conduit as required by the process sealing sections of ANSI/NFPA 70 (NEC) and CSA 22.1 (CEC). These instruments comply with the North American installation practice and provide a very safe and cost-saving installation for pressurized applications with hazardous fluids. Please refer to the following table for the seal class assigned (single seal or dual seal):

Device	Approval	Remark	Single seal MWP	Dual seal MWP
PMC71	CSA C/US IS, XP	except separate housing	-	60 bar (900 psi)
	CSA C/US IS	with separate housing	40 bar (600 psi)	-
PMP71	CSA C/US XP, XP+IS	except separate housing	400 bar (6000 psi)	-
	CSA C/US IS	except separate housing	> 200 to 400 bar (> 3000 to 6000 psi)	≤ 200 bar (3000 psi)
	CSA C/US IS	with separate housing	400 bar (6000 psi)	-
PMP75	XP, XP+IS	except separate housing	400 bar (6000 psi)	-
	CSA C/US IS	except separate housing	> 200 to 400 bar (> 3000 to 6000 psi)	≤ 200 bar (3000 psi)
	CSA C/US IS	with separate housing	400 bar (6000 psi)	-

Further information can be found in the control drawings of the relevant devices.

Ordering information

PMC71

This overview does not mark options which are mutually exclusive.

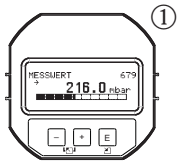

10	Approval:
A	For non-hazardous areas
E	Combined certificates ATEX II Ex ia + FM IS + CSA IS ATEX II 1/2G Ex ia IIC T6 + FM/CSA IS Class I, II, III Division 1 Group A - G
1	ATEX II 1/2 G Ex ia IIC T6
6	ATEX II 1/2 G Ex ia IIC T6, Overfill prevention WHG
2	ATEX II 1/2 D Ex ia IIC T6
8	ATEX II 1 GD Ex ia IIC T6
3	ATEX II 1/2 GD Ex ia IIC T6
5	ATEX II 2 G Ex d ia IIC T6 Gb
7	ATEX II 3 G Ex nA II T6
S	FM IS, Class I, II, III Division 1, Groups A – G; NI Class I Division 2, Groups A – D; AEx ia
T	FM XP, Class I Division 1, Groups A – D; AEx d
R	FM NI, Class I, Division 2, Groups A – D
U	CSA IS, Class I, II, III Division 1, Groups A – G; Class I Division 2, Groups A – D, Ex ia
V	CSA XP, Class I Division 1, Groups B – D; Ex d
G	NEPSI Ex d[ia] IIC T4/T6
H	NEPSI Ex ia IIC T6
L	TIIS Ex d (ia) IIC T6
M	TIIS Ex d (ia) IIC T4
I	IECEx Zone 0/1 Ex ia IIC T6
B	IEC Ex d (ia) IIC T6 Gb

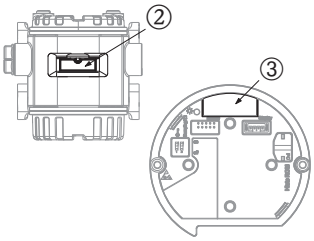

20		Output; Operation:
	A	4 to 20 mA HART, operation outside, LCD (→ see Fig. ①, ②)
	B	4 to 20 mA HART, operation inside, LCD (→ see Fig. ①, ③)
	C	4 to 20 mA HART, operation inside (→ see Fig. ③)
	D	4 to 20 mA HART, SIL operation outside, Li=0, LCD (→ see Fig. ①, ②)
	E	4 to 20 mA HART, SIL operation inside, Li=0, LCD (→ see Fig. ①, ③)
	F	4 to 20 mA HART, SIL operation inside Li=0, (→ see Fig. ③)
	M	PROFIBUS PA, operation outside, LCD (→ see Fig. ①, ②)
	N	PROFIBUS PA, operation inside, LCD (→ see Fig. ①, ③)
	O	PROFIBUS PA, operation inside (→ see Fig. ③)
	P	FOUNDATION Fieldbus, operation outside, LCD (→ see Fig. ①, ③)
	Q	FOUNDATION Fieldbus, operation inside, LCD (→ see Fig. ①, ③)
	R	FOUNDATION Fieldbus, operation inside (→ see Fig. ③)

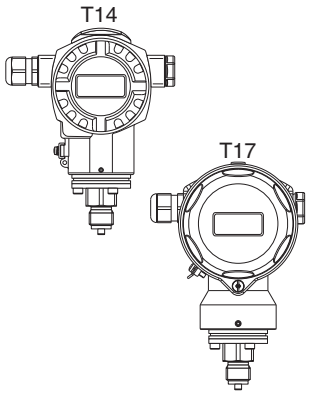

30		Housing; Cable entry; Protection:
	A	Aluminum T14 housing, optional display on the side, IP 66/67/NEMA 4X/ 6P, Gland M 20x1.5
	B	Aluminum T14 housing, optional display on the side, IP 66/67/NEMA 4X/ 6P, Thread G 1/2
	C	Aluminum T14 housing, optional display on the side, IP 66/67/NEMA 4X/ 6P, Thread 1/2 NPT
	D	Aluminum T14 housing, optional display on the side, IP66/67/NEMA 4X/ 6P, M 12x1 PA plug,
	E	Aluminum T14 housing, optional display on the side, IP 66/67/NEMA 4X/ 6P, 7/8" FF plug
	F	Aluminum T14 housing, optional display on the side, IP 65/NEMA 4X, Han7D plug, 90°
	1	AISI 316L T14 housing, optional display on the side, IP 66/67/NEMA 4X/ 6P, Gland M 20x1.5
	2	AISI 316L T14 housing, optional display on the side, IP 66/67/NEMA 4X/ 6P, Thread G 1/2
	3	AISI 316L T14 housing, optional display on the side, IP 66/67/NEMA 4X/ 6P, Thread 1/2 NPT
	4	AISI 316L T14 housing, optional display on the side, IP 66/67/NEMA 4X/ 6P, M 12x1 PA plug
	5	AISI 316L T14 housing, optional display on the side, IP 66/67/NEMA 4X/ 6P, 7/8" FF plug
	6	AISI 316L T14 housing, optional display on the side, IP 65/NEMA 4X, Han7D plug, 90°
	7	AISI 316L T14 housing, optional display on the side, IP66/67 NEMA6P; FVMQ; M20
	8	AISI 316L T14 housing, optional display on the side, IP66/67 NEMA6P; FVMQ; NPT1/2
	R	T17 316L Hygiene IP66/68 NEMA6P; M20 gland, T17 = side cover
	S	T17 316L Hygiene IP66/68 NEMA6P; G1/2 thread, T17 = side cover
	T	T17 316L Hygiene IP66/68 NEMA6P; NPT1/2 thread, T17 = side cover
	U	T17 316L Hygiene IP66/67 NEMA6P; M12 plug, T17 = side cover
	V	T17 316L Hygiene IP66/68 NEMA6P; 7/8" plug, T17 = side cover
	Z	Housing: see additional specifications

40	Sensor range; Sensor over pressure limit (= OPL):	
	Sensors for gauge pressure	
	Measurement limits: –100 % (–1 bar) to +100 % of sensor nominal value	
	Sensor rated value (URL)	**OPL (over pressure limit)**
1C	100 mbar/10 kPa/1.5 psi g	4 bar/400 kPa/60 psi g

40	Sensor range; Sensor over pressure limit (= OPL):	
1E	250 mbar/25 kPa/3.75 psi g	5 bar/500 kPa/75 psi g
1F	400 mbar/40 kPa/6 psi g	8 bar/800 kPa/120 psi g
1H	1 bar/100 kPa/15 psi g	10 bar/1 MPa/150 psi g
1K	2 bar/200 kPa/30 psi g	18 bar/1.8 MPa/270 psi g
1M	4 bar/400 kPa/60 psi g	25 bar/2.5 MPa/375 psi g
1P	10 bar/1 MPa/150 psi g	40 bar/4 MPa/600 psi g
1S	40 bar/4 MPa/600 psi g	60 bar/6 MPa/900 psi g
	Sensors for absolute pressure	
	Sensor rated value (URL)	**OPL (over pressure limit)**
2C	100 mbar/10 kPa/1.5 psi abs	4 bar/400 kPa/60 psi abs
2E	250 mbar/25 kPa/3.75 psi abs	5 bar/500 kPa/75 psi abs
2F	400 mbar/40 kPa/6 psi abs	8 bar/800 kPa/120 psi abs
2H	1 bar/100 kPa/15 psi abs	10 bar/1 MPa/150 psi abs
2K	2 bar/200 kPa/30 psi abs	18 bar/1.8 MPa/270 psi abs
2M	4 bar/400 kPa/60 psi abs	25 bar/2.5 MPa/375 psi abs
2P	10 bar/1 MPa/150 psi abs	40 bar/4 MPa/600 psi abs
2S	40 bar/4 MPa/600 psi abs	60 bar/6 MPa/900 psi abs

50	Calibration; Unit:
1	Sensor range; mbar/bar
2	Sensor range; kPa/MPa
3	Sensor range; mmH_2O/mH_2O
4	Sensor range; inH_2O/ftH_2O
6	Sensor range; psi
B	Customer-specific; see additional specification
C	Factory calibration certificate, 5-point; see additional specification
D	DKD/DAkkS certificate; see additional specification
E	Customised pressure; see additional specification
F	Customised level; see additional specification
H	Customised pressure + 5-point works calibration certificate; see additional specification
I	Customised level + 5-point works calibration certificate; see additional specification
K	Platinum; see additional specification
L	Platinum and factory calibration certificate, 5-point; see additional specification
M	Platinum and DKD/DAkkS certificate; see additional specification

70	Process connection; Material:
	Thread, internal process isolating diaphragm
GA	Thread ISO 228 G 1/2 A EN 837, AISI 316L (CRN)
GB	Thread ISO 228 G 1/2 A EN 837, Alloy C (CRN)
GC	Thread ISO 228 G 1/2 A EN 837, Monel
GD	Thread ISO 228 G 1/2 A EN 837, PVDF (MWP 10 bar (150 psi), OPL max. 15 bar (225 psi). Process temperature range –10 to +60 °C (+14 to +140 °F)
GE	Thread ISO 228 G 1/2 A G 1/4 (female), AISI 316L (CRN)
GF	Thread ISO 228 G 1/2 A G 1/4 (female), Alloy C (CRN)
GG	Thread ISO 228 G 1/2 A G 1/4 (female), Monel
GH	Thread ISO 228 G 1/2 A hole 11.4 mm, AISI 316L (CRN)
GJ	Thread ISO 228 G 1/2 A hole 11.4 mm, Alloy C (CRN)
GK	Thread ISO 228 G 1/2 A hole 11.4 mm, Monel
RA	Thread ANSI 1/2 MNPT 1/4 FNPT, AISI 316L (CRN)
RB	Thread ANSI 1/2 MNPT 1/4 FNPT, Alloy C (CRN)
RC	Thread ANSI 1/2 MNPT 1/4 FNPT, Monel
RD	Thread ANSI 1/2 MNPT, hole 11.4 mm, AISI 316L (CRN)
RE	Thread ANSI 1/2 MNPT, hole 11.4 mm, Alloy C (CRN)
RF	Thread ANSI 1/2 MNPT, hole 11.4 mm, Monel
RG	Thread ANSI 1/2 MNPT hole 3 mm, PVDF (MWP 10 bar (150 psi), OPL max. 15 bar (225 psi). Process temperature range –10 to +60 °C (+14 to +140 °F)
RH	Thread ANSI 1/2 FNPT, AISI 316L (CRN)
RJ	Thread ANSI 1/2 FNPT, Alloy C
RK	Thread ANSI 1/2 FNPT, Monel
GL	Thread JIS B0202 G 1/2 (male), AISI 316L
RL	Thread JIS B0203 R 1/2 (male), AISI 316L
GP	Thread DIN 13 M 20x1.5 EN 837 hole 3 mm, AISI 316L
GQ	Thread DIN 13 M 20x1.5 EN 837 hole 3 mm, Alloy C
	Thread, flush-mounted process isolating diaphragm
1G	Thread ISO 228 G 1 1/2 A, AISI 316L
1H	Thread ISO 228 G 1 1/2 A, Alloy C
1J	Thread ISO 228 G 1 1/2 A, Monel
1K	Thread ISO 228 G 2 A, AISI 316L

70	Process connection; Material:
1L	Thread ISO 228 G 2 A, Alloy C
1M	Thread ISO 228 G 2 A, Monel
2D	Thread ANSI 1 1/2 MNPT, AISI 316L (CRN)
2E	Thread ANSI 1 1/2 MNPT, Alloy C (CRN)
2F	Thread ANSI 1 1/2 MNPT, Monel (CRN)
2G	Thread ANSI 2 MNPT, AISI 316L (CRN)
2H	Thread ANSI 2 MNPT, Alloy C
2J	Thread ANSI 2 MNPT, Monel
1R	Thread DIN 13 M 44x1.25, AISI 316L
1S	Thread DIN 13 M 44x1.25, Alloy C
	EN/DIN flanges, flush-mounted process isolating diaphragm
BA	DN 25 PN10-40 B1, AISI 316L
CP	DN 32 PN 10-40 B1, AISI 316L
CQ	DN 40 PN 10-40 B1, AISI 316L
BR	DN 50 PN 10-16 A, PVDF (MWP 10 bar (150 psi), OPL max. 15 bar (225 psi). Process temperature range –10 to +60 °C (+14 to +140 °F)
B3	DN 50 PN 10-40 B1, AISI 316L
C3	DN 50 PN 63 B2, AISI 316L
BS	DN 80 PN 10-16 A, PVDF (MWP 10 bar (150 psi), OPL max. 15 bar (225 psi). Process temperature range –10 to +60 °C (+14 to +140 °F)
B4	DN 80 PN 10-40 B1, AISI 316L
	ANSI flanges, flush-mounted process diaphragms
AA	1" 150 lbs RF, AISI 316/316L
AB	1" 300 lbs RF, AISI 316/316L
AE	1 1/2" 150 lbs RF, AISI 316/316L (CRN)
AQ	1 1/2" 300 lbs RF, AISI 316/316L (CRN)
AF	2" 150 lbs RF, AISI 316/316L (CRN)
JR	2" 150 lbs RF, AISI 316/316L with ECTFE-coating
A3	2" 150 lbs RF, PVDF (MWP 10 bar (150 psi), OPL max. 15 bar (225 psi). Process temperature range –10 to +60 °C (+14 to +140 °F)
AR	2" 300 lbs RF, AISI 316/316L (CRN)
AG	3" 150 lbs RF, AISI 316/316L (CRN)
JS	3" 150 lbs RF, AISI 316/316L with ECTFE-coating
A4	3" 150 lbs RF, PVDF (MWP 10 bar (150 psi), OPL max. 15 bar (225 psi). Process temperature range –10 to +60 °C (+14 to +140 °F)
AS	3" 300 lbs RF, AISI 316/316L (CRN)
AH	4" 150 lbs RF, AISI 316/316L (CRN)
JT	4" 150 lbs RF, AISI 316/316L with ECTFE-coating
AT	4" 300 lbs RF, AISI 316/316L (CRN)
	JIS flanges, flush-mounted process isolating diaphragm
KF	10K 50A RF, AISI 316L
KL	10K 80A RF, AISI 316L
KH	10K 100A RF, AISI 316L
	Hygienic connections, flush-mounted process isolating diaphragm
MP	DIN 11851 DN 40 PN 25, AISI 316L, slotted nut, EHEDG, 3A with HNBR/EPDM seal (CRN)
MR	DIN 11851 DN 50 PN 25, AISI 316L, slotted nut, EHEDG, 3A with HNBR/EPDM seal (CRN)
TD	Tri-Clamp ISO 2852 DN 51 (2"), AISI 316L, EHEDG, 3A with HNBR/EPDM seal (CRN)
TF	Tri-Clamp ISO 2852 DN 76.1 (3"), AISI 316L, EHEDG, 3A with HNBR/EPDM seal (CRN)
TK	DRD DN50 (65 mm), PN 25, AISI 316L, with HNBR/EPDM seal
TR	Varivent type N for tubes DN 40 – DN 162, PN 40, AISI 316L, EHEDG, 3A with HNBR/EPDM seal (CRN)

80	Seal:
A	FKM Viton
G	FKM Viton, FDA
B	EPDM
D	Kalrez
E	Chemraz
F	NBR (FDA)/3A: HNBR (FDA)
L	FKM Viton, cleaned for silicone-free applications
M	Kalrez, cleaned for silicone-free applications
1	FKM Viton, cleaned from oil and grease
2	FKM Viton, cleaned for oxygen service Note application limits pressure/temp.

100	Additional option 1:
A	Not selected
E	SIL/IEC 61508 Declaration of Conformity
T	High-temperature version

100		**Additional option 1:**
	B	Material test certificate for wetted components, inspection certificate as per EN 10204 3.1 acc. to specification 52005759
	M	Overvoltage protection
	J	Software setting, see additional spec. Min alarm current HART burst mode PV Min alarm current + HART burst mode PV
	N	HistoROM/M-DAT
	O	Finish quality Ra<0,38 µm electro polished (wetted parts)
	S	GL/ABS marine certificate
	F	NSF potable water approval
	V	Mounting on shut-off valve from above
	3	Routine test with certificate, inspection certificate as per EN 10204 3.1
	4	Overpressure test with certificate, inspection certificate as per EN 10204 3.1
	6	EN10204-3.1 material wetted parts +Ra, Ra= surface roughness, dimensinoal check, inspection certificate
	8	EN10204-3.1 Delta-Ferrit content test, inspection certificate

110		**Additional option 2:**
	A	Not selected
	E	SIL2/IEC61508 Declaration of Conformity
	G	Separate housing, cable length see additional spec. + mounting bracket, wall/pipe, 316L
	T	High-temperature version
	M	Overvoltage protection
	J	Software setting, see additional spec. Min alarm current HART burst mode PV Min alarm current + HART burst mode PV
	N	HistoROM/M-DAT
	O	Finish quality Ra<0,38 µm electro polished (wetted parts)
	S	GL/ABS marine certificate
	F	NSF potable water approval
	U	Mounting bracket for wall/pipe, AISI 316L
	3	Routine test with certificate, inspection certificate as per EN 10204 3.1
	4	Overpressure test with certificate, inspection certificate as per EN 10204 3.1
	5	Helium leak test EN 1518 with test certificate, inspection certificate as per EN 10204 3.1
	6	EN10204-3.1 material wetted parts +Ra, Ra= surface roughness, dimensinoal check, inspection certificate
	8	EN10204-3.1 Delta-Ferrit content test, inspection certificate

850		**Firmware Version:**
	73	02.11.zz, HART, DevRev21
	74	04.00.zz, FF, DevRev07
	75	04.01.zz, PROFIBUS PA, DevRev03
	76	02.10.zz, HART, DevRev21
	77	03.00.zz, FF, DevRev06
	78	04.00.zz, PROFIBUS PA

895		**Identification:**
	Z1	Measuring point TAG, see additional specification
	Z2	Bus address, see additional specification

PMC71	Order code

PMP71

This overview does not mark options which are mutually exclusive.

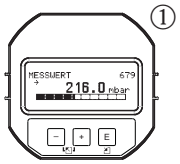

10			Approval:
	A		For non-hazardous areas
	1		ATEX II 1/2 G Ex ia IIC T6
	6		ATEX II 1/2 G Ex ia IIC T6, Overfill prevention WHG
	2		ATEX II 1/2 D
	4		ATEX II 1/3 D
	8		ATEX II 1 GD Ex ia IIC T6
	3		ATEX II 1/2 GD Ex ia IIC T6
	5		ATEX II 2 G Ex d IIC T6 Gb
	7		ATEX II 3 G Ex nA II T6
	S		FM IS, Class I, II, III Division 1, Groups A – G; NI Class I Division 2, Groups A – D; AEx ia
	T		FM XP, Class I Division 1, Groups A – D; AEx d
	Q		FM DIP, Class II, III Division 1, Groups E – G
	R		FM NI, Class I, Division 2, Groups A – D
	U		CSA IS, Class I, II, III Division 1, Groups A – G; Class I Division 2, Groups A – D, Ex ia
	V		CSA XP, Class I Division 1, Groups B – D; Ex d
	W		CSA Class II, III Division 1, Groups E – G (Dust-Ex)
	G		NEPSI Ex d IIC T6
	H		NEPSI Ex ia IIC T6
	L		TIIS Ex d IIC T6
	I		IECEx Zone 0/1 Ex ia IIC T6
	M		IEC Ex d IIC T6 Gb
	B		Combined certificates: ATEX II 1/2 G Ex ia IIC T6 + II 2 G Ex d IIC T6
	C		Combined certificates: FM IS and XP Class I Division 1, Groups A – D
	D		Combined certificates: CSA IS and XP Class I Division 1, Groups A – D
	E		Combined certificates: FM/CSA IS and XP Class I Division 1, Groups A – D
	F		Combined certificates: ATEX II Ex ia / Ex d + FM/CSA IS + XP ATEX II 1/2G Ex ia IIC T6+ ATEX II 2G Ex d IIC T6+ FM/CSA IS + XP Cl.I Div.1 Gr.A-D

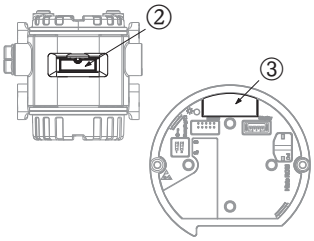

20			Output; Operation:
	A		4 to 20 mA HART, operation outside, LCD (→ see Fig. ①, ②)
	B		4 to 20 mA HART, operation inside, LCD (→ see Fig. ①, ③)
	C		4 to 20 mA HART, operation inside (→ see Fig. ③)
	D		4 to 20 mA HART, SIL operation outside, Li=0, LCD (→ see Fig. ①, ②)
	E		4 to 20 mA HART, SIL operation inside, Li=0, LCD (→ see Fig. ①, ③)
	F		4 to 20 mA HART, SIL operation inside Li=0, (→ see Fig. ③)
	M		PROFIBUS PA, operation outside, LCD (→ see Fig. ①, ②)
	N		PROFIBUS PA, operation inside, LCD (→ see Fig. ①, ③)
	O		PROFIBUS PA, operation inside (→ see Fig. ③)
	P		FOUNDATION Fieldbus, operation outside, LCD (→ see Fig. ①, ③)
	Q		FOUNDATION Fieldbus, operation inside, LCD (→ see Fig. ①, ③)
	R		FOUNDATION Fieldbus, operation inside (→ see Fig. ③)

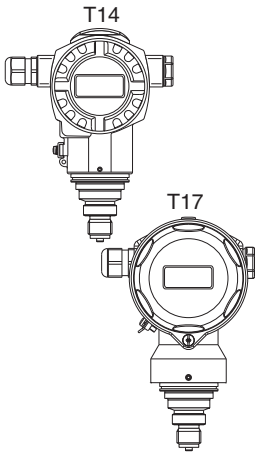

30				Housing; Cable entry; Protection:
	A			Aluminum T14 housing, optional display on the side, IP 66/67/NEMA 4X/ 6P, Gland M 20x1.5
	B			Aluminum T14 housing, optional display on the side, IP 66/67/NEMA 4X/ 6P, Thread G 1/2
	C			Aluminum T14 housing, optional display on the side, IP 66/67/NEMA 4X/ 6P, Thread 1/2 NPT
	D			Aluminum T14 housing, optional display on the side, IP66/67/NEMA 4X/ 6P, M 12x1 PA plug,
	E			Aluminum T14 housing, optional display on the side, IP 66/67/NEMA 4X/ 6P, 7/8" FF plug
	F			Aluminum T14 housing, optional display on the side, IP 65/NEMA 4X, Han7D plug, 90°
	1			AISI 316L T14 housing, optional display on the side, IP 66/67/NEMA 4X/ 6P, Gland M 20x1.5
	2			AISI 316L T14 housing, optional display on the side, IP 66/67/NEMA 4X/ 6P, Thread G 1/2
	3			AISI 316L T14 housing, optional display on the side, IP 66/67/NEMA 4X/ 6P, Thread 1/2 NPT
	4			AISI 316L T14 housing, optional display on the side, IP 66/67/NEMA 4X/ 6P, M 12x1 PA plug
	5			AISI 316L T14 housing, optional display on the side, IP 66/67/NEMA 4X/ 6P, 7/8" FF plug
	6			AISI 316L T14 housing, optional display on the side, IP 65/NEMA 4X, Han7D plug, 90°
	7			AISI 316L T14 housing, optional display on the side, IP66/67 NEMA6P; FVMQ; M20
	8			AISI 316L T14 housing, optional display on the side, IP66/67 NEMA6P; FVMQ; NPT1/2
	R			T17 316L Hygiene IP66/68 NEMA6P; M20 gland, T17 = side cover
	S			T17 316L Hygiene IP66/68 NEMA6P; G1/2 thread, T17 = side cover
	T			T17 316L Hygiene IP66/68 NEMA6P; NPT1/2 thread, T17 = side cover
	U			T17 316L Hygiene IP66/67 NEMA6P; M12 plug, T17 = side cover
	V			T17 316L Hygiene IP66/68 NEMA6P; 7/8" plug, T17 = side cover
	Z			Housing: see additional specifications

40 — Sensor range; Sensor over pressure limit (= OPL):

Sensors for gauge pressure

Measurement limits: –100 % (–1 bar) to +100 % of sensor nominal value

	Sensor rated value (URL)	OPL (over pressure limit)
1F	400 mbar/40 kPa/6 psi g	6 bar/600 kPa/90 psi g
1H	1 bar/100 kPa/15 psi g	10 bar/1 MPa/150 psi g
1K	2 bar/200 kPa/30 psi g	20 bar/2 MPa/300 psi g
1M	4 bar/400 kPa/60 psi g	28 bar/2.8 MPa/420 psi g
1P	10 bar/1 MPa/150 psi g	40 bar/4 MPa/600 psi g
1S	40 bar/4 MPa/600 psi g	160 bar/16 MPa/2400 psi g
1U	100 bar/10 MPa/1500 psi g	400 bar/40 MPa/6000 psi g
1W	400 bar/40 MPa/6000 psi g	600 bar/60 MPa/9000 psi g
1X	700 bar/70 MPa/10500 psi g	1050 bar/105 MPa/15700 psi g

Sensors for absolute pressure

	Sensor rated value (URL)	OPL (over pressure limit)
2F	400 mbar/40 kPa/6 psi abs	6 bar/600 kPa/90 psi abs
2H	1 bar/100 kPa/15 psi abs	10 bar/1 MPa/150 psi abs
2K	2 bar/200 kPa/30 psi abs	20 bar/2 MPa/300 psi abs
2M	4 bar/400 kPa/60 psi abs	28 bar/2.8 MPa/420 psi abs
2P	10 bar/1 MPa/150 psi abs	40 bar/4 MPa/600 psi abs
2S	40 bar/4 MPa/600 psi abs	160 bar/16 MPa/2400 psi abs
2U	100 bar/10 MPa/1500 psi abs	400 bar/40 MPa/6000 psi abs
2W	400 bar/40 MPa/6000 psi abs	600 bar/60 MPa/9000 psi abs
2X	700 bar/70 MPa/10500 psi abs	1050 bar/105 MPa/15700 psi abs
	MID sensors	
MP	10 bar	40 bar
MT	50 bar	400 bar
MU	100 bar	400 bar

50 — Calibration; Unit:

1	Sensor range; mbar/bar
2	Sensor range; kPa/MPa
3	Sensor range; mmH_2O/mH_2O
4	Sensor range; inH_2O/ftH_2O
6	Sensor range; psi
B	Customer-specific; see additional specification
C	Factory calibration certificate, 5-point; see additional specification
D	DKD/DAkkS certificate; see additional specification
E	Customised pressure; see additional specification
F	Customised level; see additional specification
H	Customised pressure + 5-point works calibration certificate; see additional specification
I	Customised level + 5-point works calibration certificate; see additional specification
K	Platinum; see additional specification
L	Platinum and factory calibration certificate, 5-point; see additional specification
M	Platinum and DKD/DAkkS certificate; see additional specification

60 — Material of the process isolating diaphragm:

1	AISI 316L
2	Alloy C276
6	AISI 316L with gold-rhodium coating

70 — Process connection; Material:

	Thread, internal process isolating diaphragm:
GA	Thread ISO 228 G 1/2 A EN 837, AISI 316L
GB	Thread ISO 228 G 1/2 A EN 837, Alloy C
GE	Thread ISO 228 G 1/2 A G 1/4 (female), AISI 316L
GF	Thread ISO 228 G 1/2 A G 1/4 (female), Alloy C
GH	Thread ISO 228 G 1/2 A hole 11.4 mm, AISI 316L
GJ	Thread ISO 228 G 1/2 A hole 11.4 mm, Alloy C
RA	Thread ANSI 1/2 MNPT 1/4 FNPT, AISI 316L (CRN)
RB	Thread ANSI 1/2 MNPT 1/4 FNPT, Alloy C (CRN)
RD	Thread ANSI 1/2 MNPT hole, AISI 316L (CRN)
RE	Thread ANSI 1/2 MNPT hole, Alloy C (CRN)
RH	Thread ANSI 1/2 FNPT, AISI 316L (CRN)
RJ	Thread ANSI 1/2 FNPT, Alloy C
GL	Thread JIS B0202 G 1/2 (male), AISI 316L
RL	Thread JIS B0203 R 1/2 (male), AISI 316L
	Thread, internal process isolating diaphragm
GP	Thread DIN 13 M 20x1.5 EN 837 hole 11.4 mm, AISI 316L
GQ	Thread DIN 13 M 20x1.5 EN 837 hole 11.4 mm, Alloy C

70	Process connection; Material:
	Thread, flush-mounted process isolating diaphragm
1A	Thread ISO 228 G 1/2 A, DIN 3852, AISI 316L
1B	Thread ISO 228 G 1/2 A, DIN 3852, Alloy C
1D	Thread ISO 228 G 1 A, AISI 316L
1E	Thread ISO 228 G 1 A, Alloy C
1G	Thread ISO 228 G 1 1/2 A, AISI 316L
1H	Thread ISO 228 G 1 1/2 A, Alloy C
1K	Thread ISO 228 G 2 A, AISI 316L
1L	Thread ISO 228 G 2 A, Alloy C
2A	Thread ANSI 1 MNPT, AISI 316L
2B	Thread ANSI 1 MNPT, Alloy C (CRN)
2D	Thread ANSI 1 1/2 MNPT, AISI 316L (CRN)
2E	Thread ANSI 1 1/2 MNPT, Alloy C (CRN)
2G	Thread ANSI 2 MNPT, AISI 316L (CRN)
2H	Thread ANSI 2 MNPT, Alloy C
1N	Thread DIN 16288 M 20x1.5, AISI 316L
1P	Thread DIN 16288 M 20x1.5, Alloy C
1R	Thread DIN 13 M 44x1.25, AISI 316L
1S	Thread DIN 13 M 44x1.25, Alloy C
	EN/DIN flanges, flush-mounted process isolating diaphragm
CN	DN 25 PN 10-40 B1, AISI 316L
CP	DN 32 PN 10-40 B1, AISI 316L
CQ	DN 40 PN 10-40 B1, AISI 316L
B3	DN 50 PN 10-40 B1, AISI 316L
B4	DN 80 PN 10-40 B1, AISI 316L
	ANSI flanges, flush-mounted process isolating diaphragm
AN	1" 300 lbs RF, AISI 316/316L (CRN)
AE	1 1/2" 150 lbs RF, AISI 316/316L (CRN)
AQ	1 1/2" 300 lbs RF, AISI 316/316L (CRN)
AF	2" 150 lbs RF, AISI 316/316L (CRN)
AR	2" 300 lbs RF, AISI 316/316L (CRN)
AG	3" 150 lbs RF, AISI 316/316L (CRN)
AS	3" 300 lbs RF, AISI 316/316L (CRN)
AH	4" 150 lbs RF, AISI 316/316L (CRN)
AT	4" 300 lbs RF, AISI 316/316L (CRN)
	JIS flanges, flush-mounted process isolating diaphragm
KA	20K 25A RF, AISI 316L
KF	10K 50A RF, AISI 316L
KL	10K 80A RF, AISI 316L
KH	10K 100A RF, AISI 316L
	Other
UR	Oval flange adapter 1/4-18 NPT, mounting: 7/16-20 UNF, AISI 316L (CRN)
U1	Prepared for diaphragm seal mount, AISI 316L (CRN)

90	Fill fluid:
A	Silicone oil
F	Inert oil
K	Inert oil, cleaned from oil and grease
N	Inert oil, cleaned for oxygen service (observe application limits pressure/temperature)

100	Additional option 1:
A	Not selected
E	SIL/IEC 61508 Declaration of Conformity
B	Material test certificate for wetted components, inspection certificate as per EN 10204 3.1 acc. to specification 52005759
C	NACE MR0175 (wetted parts)
D	Material test certificate for wetted components as per EN 10204 3.1 and NACE MR0175 material, inspection certificate as per EN 10204 acc. to specification 52010806
M	Overvoltage protection
V	Mounting on shut-off valve from above
J	Software setting, see additional spec.
	Min alarm current
	HART burst mode PV
	Min alarm current + HART burst mode PV
N	HistoROM/M-DAT
S	GL/ABS marine certificate
F	NSF potable water approval
3	Routine test with certificate, inspection certificate as per EN 10204 3.1

100		**Additional option 1:**
	4	Overpressure test with certificate, inspection certificate as per EN 10204 3.1

110		**Additional option 2:**
	A	Not selected
	E	SIL/IEC 61508 Declaration of Conformity
	G	Separate housing, cable length see additional spec. + mounting bracket, wall/pipe, 316L
	M	Overvoltage protection
	J	Software setting, see additional spec. Min alarm current HART burst mode PV Min alarm current + HART burst mode PV
	N	HistoROM/M-DAT
	S	GL/ABS marine certificate
	F	NSF potable water approval
	U	Mounting bracket for wall/pipe, AISI 316L
	3	Individual testing with test certificate, inspection certificate as per EN10204 3.1
	4	Overpressure test with certificate, inspection certificate as per EN 10204 3.1
	5	Helium leak test EN 1528 with test certificate, inspection certificate as per EN 10204 3.1

850		**Firmware Version:**
	73	02.11.zz, HART, DevRev21
	74	04.00.zz, FF, DevRev07
	75	04.01.zz, PROFIBUS PA, DevRev03
	76	02.10.zz, HART, DevRev21
	77	03.00.zz, FF, DevRev06
	78	04.00.zz, PROFIBUS PA

895		**Identification:**
	Z1	Measuring point TAG, see additional specification
	Z2	Bus address, see additional specification

PMP71	Order code

PMP75

This overview does not mark options which are mutually exclusive.

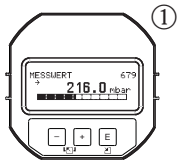

10		**Approval:**
	A	For non-hazardous areas
	1	ATEX II 1/2 G Ex ia IIC T6
	6	ATEX II 1/2 G Ex ia IIC T6, Overfill prevention WHG
	2	ATEX II 1/2 D
	4	ATEX II 1/3 D
	8	ATEX II 1 GD Ex ia IIC T6
	3	ATEX II 1/2 GD Ex ia IIC T6
	5	ATEX II 2 G Ex d IIC T6 Gb
	7	ATEX II 3 G Ex nA II T6
	S	FM IS, Class I, II, III Division 1, Groups A – G; NI Class I Division 2, Groups A – D; AEx ia
	T	FM XP, Class I Division 1, Groups A – D; AEx d
	Q	FM DIP, Class II, III Division 1, Groups E – G
	R	FM NI, Class I, Division 2, Groups A – D
	U	CSA IS, Class I, II, III Division 1, Groups A – G; Class I Division 2, Groups A – D, Ex ia
	V	CSA XP, Class I Division 1, Groups B – D; Ex d
	W	CSA Class II, III Division 1, Groups E – G (Dust-Ex)
	G	NEPSI Ex d IIC T6
	H	NEPSI Ex ia IIC T6
	L	TIIS Ex d IIC T6
	I	IECEx Zone 0/1 Ex ia IIC T6
	M	IEC Ex d IIC T6 Gb
	B	Combined certificates: ATEX II 1/2 G Ex ia IIC T6 + II 2 G Ex d IIC T6
	C	Combined certificates: FM IS and XP Class I Division 1, Groups A – D
	D	Combined certificates: CSA IS and XP Class I Division 1, Groups A – D
	E	Combined certificates: FM/CSA IS and XP Class I Division 1, Groups A – D
	F	Combined certificates: ATEX II Ex ia / Ex d + FM/CSA IS + XP, ATEX II 1/2G Ex ia IIC T6+ATEX II 2G Ex d IIC T6+ FM/CSA IS + XP Cl.I Div.1 Gr.A-D

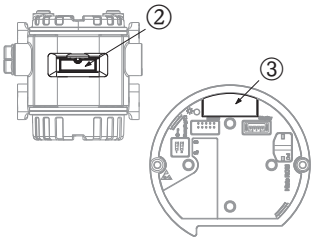

20	Output; Operation:
A	4 to 20 mA HART, operation outside, LCD (→ see Fig. ①, ②)
B	4 to 20 mA HART, operation inside, LCD (→ see Fig. ①, ③)
C	4 to 20 mA HART, operation inside (→ see Fig. ③)
D	4 to 20 mA HART, SIL operation outside, Li=0, LCD (→ see Fig. ①, ②)
E	4 to 20 mA HART, SIL operation inside, Li=0, LCD (→ see Fig. ①, ③)
F	4 to 20 mA HART, SIL operation inside Li=0, (→ see Fig. ③)
M	PROFIBUS PA, operation outside, LCD (→ see Fig. ①, ②)
N	PROFIBUS PA, operation inside, LCD (→ see Fig. ①, ③)
O	PROFIBUS PA, operation inside (→ see Fig. ③)
P	FOUNDATION Fieldbus, operation outside, LCD (→ see Fig. ①, ③)
Q	FOUNDATION Fieldbus, operation inside, LCD (→ see Fig. ①, ③)
R	FOUNDATION Fieldbus, operation inside (→ see Fig. ③)

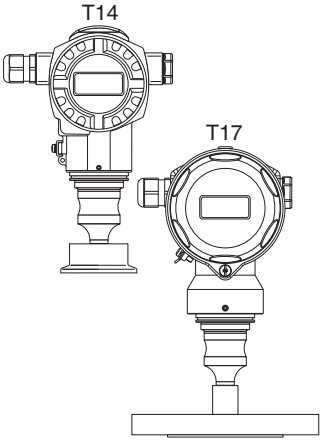

30	Housing; Cable entry; Protection:
A	Aluminum T14 housing, optional display on the side, IP 66/67/NEMA 4X/ 6P, Gland M 20x1.5
B	Aluminum T14 housing, optional display on the side, IP 66/67/NEMA 4X/ 6P, Thread G 1/2
C	Aluminum T14 housing, optional display on the side, IP 66/67/NEMA 4X/ 6P, Thread 1/2 NPT
D	Aluminum T14 housing, optional display on the side, IP66/67/NEMA 4X/ 6P, M 12x1 PA plug,
E	Aluminum T14 housing, optional display on the side, IP 66/67/NEMA 4X/ 6P, 7/8" FF plug
F	Aluminum T14 housing, optional display on the side, IP 65/NEMA 4X, Han7D plug, 90°
1	AISI 316L T14 housing, optional display on the side, IP 66/67/NEMA 4X/ 6P, Gland M 20x1.5
2	AISI 316L T14 housing, optional display on the side, IP 66/67/NEMA 4X/ 6P, Thread G 1/2
3	AISI 316L T14 housing, optional display on the side, IP 66/67/NEMA 4X/ 6P, Thread 1/2 NPT
4	AISI 316L T14 housing, optional display on the side, IP 66/67/NEMA 4X/ 6P, M 12x1 PA plug
5	AISI 316L T14 housing, optional display on the side, IP 66/67/NEMA 4X/ 6P, 7/8" FF plug
6	AISI 316L T14 housing, optional display on the side, IP 65/NEMA 4X, Han7D plug, 90°
7	AISI 316L T14 housing, optional display on the side, IP66/67 NEMA6P; FVMQ; M20
8	AISI 316L T14 housing, optional display on the side, IP66/67 NEMA6P; FVMQ; NPT1/2
R	T17 316L Hygiene IP66/68 NEMA6P; M20 gland, T17 = side cover
S	T17 316L Hygiene IP66/68 NEMA6P; G1/2 thread, T17 = side cover
T	T17 316L Hygiene IP66/68 NEMA6P; NPT1/2 thread, T17 = side cover
U	T17 316L Hygiene IP66/67 NEMA6P; M12 plug, T17 = side cover
V	T17 316L Hygiene IP66/68 NEMA6P; 7/8" plug, T17 = side cover
Z	Housing: see additional specifications

40 — Sensor range; Sensor over pressure limit (= OPL):

Sensors for gauge pressure

Measurement limits: –100 % (–1 bar) to +100 % of sensor nominal value

	Sensor rated value (URL)	OPL (over pressure limit)
1F	400 mbar/40 kPa/6 psi	6 bar/600 kPa/90 psi
1H	1 bar/100 kPa/15 psi	10 bar/1 MPa/150 psi
1K	2 bar/200 kPa/30 psi	20 bar/2 MPa/300 psi
1M	4 bar/400 kPa/60 psi	28 bar/2.8 MPa/420 psi
1P	10 bar/1 MPa/150 psi	40 bar/4 MPa/600 psi
1S	40 bar/4 MPa/600 psi	160 bar/16 MPa/2400 psi
1U	100 bar/10 MPa/1500 psi	400 bar/40 MPa/6000 psi
1W	400 bar/40 MPa/6000 psi	600 bar/60 MPa/9000 psi

Sensors for absolute pressure

	Sensor rated value (URL)	OPL (over pressure limit)
2F	400 mbar/40 kPa/6 psi abs	6 bar/600 kPa/90 psi abs
2H	1 bar/100 kPa/15 psi abs	10 bar/1 MPa/150 psi abs
2K	2 bar/200 kPa/30 psi abs	20 bar/2 MPa/300 psi abs
2M	4 bar/400 kPa/60 psi abs	28 bar/2.8 MPa/420 psi abs
2P	10 bar/1 MPa/150 psi abs	40 bar/4 MPa/600 psi abs
2S	40 bar/4 MPa/600 psi abs	160 bar/16 MPa/2400 psi abs
2U	100 bar/10 MPa/1500 psi abs	400 bar/40 MPa/6000 psi abs
2W	400 bar/40 MPa/6000 psi abs	600 bar/60 MPa/9000 psi abs

50	Calibration; Unit:
1	Sensor range; mbar/bar
2	Sensor range; kPa/MPa
3	Sensor range; mmH_2O/mH_2O
4	Sensor range; inH_2O/ftH_2O
6	Sensor range; psi
B	Customer-specific; see additional specification
C	Factory calibration certificate, 5-point; see additional specification
D	DKD/DAkkS calibration: see additional specification
E	Customised pressure; see additional specification
F	Customised level; see additional specification

50		**Calibration; Unit:**
	H	Customised pressure + 5-point works calibration certificate; see additional specification
	I	Customised level + 5-point works calibration certificate; see additional specification
60		**Material of the process isolating diaphragm:**
	1	AISI 316L
	2	Alloy C276
	3	Monel
	5	Tantalum
	6	AISI 316L with gold-rhodium coating
	8	AISI 316L with 0.25 mm PTFE foil (not for vacuum applications)
70		**Process connection, material:**
		Diaphragm seal cell structure
	UI	Pancake DN 50 PN 16-400, AISI 316L
	UJ	Pancake DN 80 PN 16-400, AISI 316L
	UK	Pancake DN 100 PN 16-400, AISI 316L
	UL	Pancake 2" 150-2500 lbs, AISI 316L (CRN)
	UM	Pancake 3" 150-2500 lbs, AISI 316L (CRN)
	UR	Pancake 4" 150-2500 lbs, AISI 316L (CRN)
		Thread, flush-mounted process isolating diaphragm
	1D	Thread ISO 228 G 1 A, AISI 316L
	1E	Thread ISO 228 G 1 A, Alloy C
	1G	Thread ISO 228 G 1 1/2 A, AISI 316L
	1H	Thread ISO 228 G 1 1/2 A, Alloy C
	1K	Thread ISO 228 G 2 A, AISI 316L
	1L	Thread ISO 228 G 2 A, Alloy C
	2A	Thread ANSI 1 MNPT, AISI 316L
	2B	Thread ANSI 1 MNPT, Alloy C (CRN)
	2D	Thread ANSI 1 1/2 MNPT, AISI 316L (CRN)
	2E	Thread ANSI 1 1/2 MNPT, Alloy C (CRN)
	2G	Thread ANSI 2 MNPT, AISI 316L (CRN)
	2H	Thread ANSI 2 MNPT, Alloy C (CRN)
		Clamp connections
	TB	Tri-Clamp, ISO 2852 DN 25 (1"), DIN 32676 DN 25, AISI 316L (CRN), EHEDG
	TC	Tri-Clamp, ISO 2852 DN 38 (1 1/2"), DIN 32676 DN 40, AISI 316L (CRN), EHEDG
	TD	Tri-Clamp, ISO 2852 DN 51 (2")/DN 50, AISI 316L (CRN), EHEDG
	TF	Tri-Clamp, ISO 2852 DN 76.1 (3"), AISI 316L (CRN), EHEDG
		Pipe diaphragm seal Clamp connections
	SB	Tri-Clamp, ISO 2852 DN 25 (1"), AISI 316L (CRN)
	SC	Tri-Clamp, ISO 2852 DN 38 (1 1/2"), AISI 316L, 3.1 + Pressure test acc. to PED Cat.II (CRN)
	SD	Tri-Clamp, ISO 2852 DN 51 (2"), AISI 316L, 3.1 + Pressure test acc. to PED Cat.II (CRN)
		Hygienic connections
	MR	DIN 11851 DN 50 PN 25, slotted nut, AISI 316L, EHEDG, 3A
	MS	DIN 11851 DN 65 PN 25, slotted nut, AISI 316L, EHEDG, 3A
	MT	DIN 11851 DN 80 PN 25, slotted nut, AISI 316L, EHEDG, 3A
	TG	SMS 1" PN 25, AISI 316L, EHEDG
	TH	SMS 1 1/2" PN 25, AISI 316L, EHEDG
	TI	SMS 2" PN 25, AISI 316L, EHEDG
	TL	APV-RJT 1" PN 40, AISI 316L
	TM	APV-RJT 1 1/2" PN 40, AISI 316L
	TN	APV-RJT 2" PN 40, AISI 316L
	TP	APV-ISS 1" PN 40, AISI 316L
	TQ	APV-ISS 1 1/2" PN 40, AISI 316L
	TS	APV-ISS 2" PN 40, AISI 316L
	TK	DRD DN50 (65 mm) PN 25, AISI 316L
	TR	Varivent Type N for pipes DN 40 – DN 162 PN 40, AISI 316L, EHEDG
	0	Universal adapter 44 mm including silicon molded seal, EHEDG, 3A (CRN)
		EN/DIN flanges, flush-mounted process isolating diaphragm
	CN	DN 25 PN 10-40 B1, AISI 316L
	DN	DN 25 PN 63-160 E, AISI 316L
	EN	DN 25 PN 250 E, AISI 316L
	E1	DN 25 PN 400 E, AISI 316L
	CP	DN 32 PN 10-40 B1, AISI 316L
	CQ	DN 40 PN 10-40 B1, AISI 316L
	B3	DN 50 PN 10-40 B1, AISI 316L
	C3	DN 50 PN 63 B2, AISI 316L
	EF	DN 50 PN 100-160 E, AISI 316L

70	Process connection, material:
ER	DN 50 PN 250 E, AISI 316L
E3	DN 50 PN 400 E, AISI 316L
B4	DN 80 PN 10-40 B1, AISI 316L
C4	DN 80 PN 100 B2, AISI 316L
C5	DN 100 PN 100 B2, AISI 316L
EN/DIN flanges with ext. diaph. seal, flush-mounted process isolating diaphragm	
D3	DN 50 PN 10-40 B1, extended diaphragm seal 50 mm/100 mm/200 mm, AISI 316L
D4	DN 80 PN 10-40 B1, extended diaphragm seal 50 mm/100 mm/200 mm, AISI 316L
ANSI flanges, flush-mounted process isolating diaphragm	
AC	1" 150 lbs RF, AISI 316/316L (CRN)
AN	1" 300 lbs RF, AISI 316/316L (CRN)
HC	1" 400/600 lbs RF, AISI 316/316L (CRN)
HN	1" 900/1500 lbs RF, AISI 316/316L (CRN)
H0	1" 2500 lbs RF, AISI 316/316L (CRN)
AE	1 1/2" 150 lbs RF, AISI 316/316L (CRN)
AQ	1 1/2" 300 lbs RF, AISI 316/316L (CRN)
AF	2" 150 lbs RF, AISI 316/316L (CRN)
AR	2" 300 lbs RF, AISI 316/316L (CRN)
HF	2" 400/600 lbs RF, AISI 316/316L (CRN)
HR	2" 900/1500 lbs RF, AISI 316/316L (CRN)
H3	2" 2500 lbs RF, AISI 316/316L
AG	3" 150 lbs RF, AISI 316/316L (CRN)
AS	3" 300 lbs RF, AISI 316/316L (CRN)
AH	4" 150 lbs RF, AISI 316/316L (CRN)
AT	4" 300 lbs RF, AISI 316/316L (CRN)
ANSI flanges with ext. diaph. seal, flush-mounted process isolating diaphragm	
J3	2" 150 lbs RF, extended diaphragm seal 2"/4"/6"/8", AISI 316/316L (CRN)
J4	3" 150 lbs RF, extended diaphragm seal 2"/4"/6"/8", AISI 316/316L (CRN)
J7	3" 300 lbs RF, extended diaphragm seal 2"/4"/6"/8", AISI 316/316L (CRN)
J5	4" 150 lbs RF, extended diaphragm seal 2"/4"/6"/8", AISI 316/316L (CRN)
J8	4" 300 lbs RF, extended diaphragm seal 2"/4"/6"/8", AISI 316/316L (CRN)
JIS flanges, flush-mounted process isolating diaphragm	
KC	10K 25A RF, AISI 316L
KF	10K 50A RF, AISI 316L
KL	10K 80A RF, AISI 316L
KH	10K 100A RF, AISI 316L
Other	
UA	Thread ISO 228 G 1/2 A PN 160, separator, EN 837, welded, AISI 316L
UB	Thread ANSI 1/2 MNPT PN 160, separator, welded, AISI 316L (CRN)
UC	Thread ISO 228 G 1/2 B, separator, EN 837, threaded, AISI 316L
UD	Thread ANSI 1/2 MNPT, separator, threaded, AISI 316L
UG	Thread 1/2 NPT PN 250, separator, threaded, AISI 316L
UH	Thread 1 NPT PN 250, separator, threaded, AISI 316L

90	Fill fluid, temperature isolation:
A	Silicone oil
B	...m capillary, inert oil
C	...ft capillary, inert oil
D	Vegetable oil
F	Inert oil
G	High-temperature oil, temp. isolator 100 mm
H	Silicone oil, temp. isolator 100 mm
K	Inert oil, cleaned from oil and grease
N	Inert oil, cleaned for oxygen services
1	... m capillary, silicone oil
2	... ft capillary, silicone oil
3	... m capillary, high-temperature oil
4	... ft capillary, high-temperature oil
5	... m capillary, vegetable oil
6	... ft capillary, vegetable oil
7	... m capillary, low-temperature oil
8	... ft capillary, low-temperature oil

100	Additional option 1:
A	Not selected
E	SIL2/IEC61508 Declaration of Conformity
B	Material test certificate for wetted components, inspection certificate as per EN 10204 3.1 acc. to specification 52005759
C	NACE MR0175 (wetted parts)

100		**Additional option 1:**
	D	Material test certificate for wetted parts, inspection certificate as per EN 10204 3.1 and NACE MR0175 material, inspection certificate as per EN 10204 acc. to specification 52010806
	M	Overvoltage protection
	J	Software setting, see additional spec. Min alarm current HART burst mode PV Min alarm current + HART burst mode PV
	N	HistoROM/M-DAT
	S	GL/ABS marine certificate
	3	Routine test with certificate, inspection certificate as per EN 10204 3.1
	4	Overpressure test with certificate, inspection certificate as per EN 10204 3.1

110		**Additional option 2:**
	A	Not selected
	E	SIL2/IEC61508 Declaration of Conformity
	G	Separate housing, cable length see additional spec. + mounting bracket, wall/pipe, 316L
	M	Overvoltage protection
	J	Software setting, see additional spec. Min alarm current HART burst mode PV Min alarm current + HART burst mode PV
	N	HistoROM/M-DAT
	P	Ra < 0.38 µm/15.75 µin, electropolished + EN10204-3.1 material (wetted) inspection certificate; in conjunction with process connection versions "TC", "TD" and "TR" please order roughness test separately
	S	GL/ABS marine certificate
	U	Mounting bracket for wall/pipe, AISI 316L
	3	Routine test with certificate, inspection certificate as per EN 10204 3.1
	4	Overpressure test with certificate, inspection certificate as per EN 10204 3.1

850		**Firmware Version:**
	73	02.11.zz, HART, DevRev21
	74	04.00.zz, FF, DevRev07
	75	04.01.zz, PROFIBUS PA, DevRev03
	76	02.10.zz, HART, DevRev21
	77	03.00.zz, FF, DevRev06
	78	04.00.zz, PROFIBUS PA

895		**Identification:**
	Z1	Measuring point TAG, see additional specification
	Z2	Bus address, see additional specification

PMP75	Order code

Additional documentation

Field of Activities

- Pressure measurement, powerful instruments for process pressure, differential pressure, level and flow: FA00004P/00/EN

Technical Information

- Deltabar S: TI00382P/00/EN
- Deltapilot S: TI00416P/00/EN
- EMC test procedures TI00241F/00/EN

Operating Instructions

4 to 20 mA HART:
- Cerabar S: BA00271P/00/EN
- Description of device functions Cerabar S/Deltabar S/Deltapilot S: BA00274P/00/EN

4 to 20 mA HART with MID parts certificate:
- BA00412P/00/EN
- Description of Device Functions: BA00413P/00/EN

PROFIBUS PA:
- Cerabar S: BA00295P/00/EN
- Description of device functions Cerabar S/Deltabar S/Deltapilot S: BA00296P/00/EN

FOUNDATION Fieldbus:
- Cerabar S: BA00302P/00/EN
- Description of device functions Cerabar S/Deltabar S/Deltapilot S: BA00303P/00/EN

Brief Operating Instructions

- 4 to 20 mA HART, Cerabar S: KA01019P/00/EN
- PROFIBUS PA, Cerabar S: KA01022P/00/EN
- FOUNDATION Fieldbus, Cerabar S: KA01025P/00/EN

Functional safety manual (SIL)

- Cerabar S (4 to 20 mA): SD00190P/00/EN

Safety Instructions

Certificate/type of protection	Device	Electronics	Documentation	Version in the order code
ATEX II 1/2 G Ex ia IIC T6	PMC71, PMP71, PMP75	– 4 to 20 mA HART, PROFIBUS PA, FOUNDATION Fieldbus	– XA00244P	1
ATEX II 1/2 D	PMP71, PMP75	– 4 to 20 mA HART – PROFIBUS PA, FOUNDATION Fieldbus	– XA00246P – XA00289P	2
ATEX II 1/2 D Ex ia IIC	PMC71	– 4 to 20 mA HART – PROFIBUS PA, FOUNDATION Fieldbus	– XA00247P – XA00290P	2
ATEX II 1/3 D	PMP71, PMP75	– 4 to 20 mA HART – PROFIBUS PA, FOUNDATION Fieldbus	– XA00248P – XA00291P	4
ATEX II 2 G Ex d IIC T6 Gb	PMP71, PMP75	– 4 to 20 mA HART, PROFIBUS PA, FOUNDATION Fieldbus	– XA00249P	5
ATEX II 2 G Ex d ia IIC T6 Gb	PMC71	– 4 to 20 mA HART, PROFIBUS PA, FOUNDATION Fieldbus	– XA00250P	5
ATEX II 3 G Ex nA II T6	PMC71, PMP71, PMP75	– 4 to 20 mA HART, PROFIBUS PA, FOUNDATION Fieldbus	– XA00251P	7
ATEX II 1/2 GD Ex ia IIC T6	PMC71, PMP71, PMP75	– 4 to 20 mA HART, PROFIBUS PA, FOUNDATION Fieldbus	– XA00253P	3
ATEX II 1 GD Ex ia IIC T6	PMC71, PMP71, PMP75	– 4 to 20 mA HART, PROFIBUS PA, FOUNDATION Fieldbus	– XA00276P	8
ATEX II 1/2 G Ex ia IIC T6 + ATEX II 2 G Ex d IIC T6	PMP71, PMP75	– 4 to 20 mA HART, PROFIBUS PA, FOUNDATION Fieldbus	– XA00252P	B

Certificate/type of protection	Device	Electronic insert	Documentation	Version in the order code
IECEx Zone 0/1 Ex ia IIC T6	PMC71, PMP71, PMP75	– 4 to 20 mA HART	– XB00005P	I
IEC Ex d ia IIC T6 Gb	PMC71	– 4 to 20 mA HART, PROFIBUS PA, FOUNDATION Fieldbus	– XA00511P	B
IEC Ex d IIC T6 Gb	PMP71, PMP75	– 4 to 20 mA HART, PROFIBUS PA, FOUNDATION Fieldbus	– XA00510P	M

Certificate/type of protection	Device	Electronic insert	Documentation	Version in the order code
NEPSI Ex ia IIC T6	PMC71, PMP71, PMP75	– 4 to 20 mA HART, PROFIBUS PA, FOUNDATION Fieldbus	– XA00549P	H
NEPSI Ex d IIC T6	PMP71, PMP75	– 4 to 20 mA HART, PROFIBUS PA, FOUNDATION Fieldbus	– XA00551P	G
NEPSI Ex d[ia] IIC T6	PMC71	– 4 to 20 mA HART, PROFIBUS PA, FOUNDATION Fieldbus	– XA00551P	G

Certificate/type of protection	Device	Electronics	Documentation	Version in the order code
TIIS Ex d [ia] IIC T6	PMC71	– 4 to 20 mA HART	– TC17436	L
TIIS Ex d [ia] IIC T4	PMC71	– 4 to 20 mA HART	– TC17398, TC17399	M
TIIS Ex d IIC T6	PMP71 (700 bar version)	– 4 to 20 mA HART	– TC17445	L
TIIS Ex d IIC T6	PMP71, PMP75	– 4 to 20 mA HART	– TC17446	L

Installation/Control Drawings

Certificate/type of protection	Device	Electronics	Documentation	Version in the order code
FM IS Class I, II, III, Division 1, Groups A – G; NI, Class I Division 2, Groups A – D; AEx ia	PMC71, PMP71, PMP75	– 4 to 20 mA HART – PROFIBUS PA, FOUNDATION Fieldbus	– ZD00147P – ZD00188P	S
CSA IS Class I, II, III, Division 1, Groups A – G; Class I Division 2, Groups A – G	PMC71, PMP71, PMP75	– 4 to 20 mA HART – PROFIBUS PA, FOUNDATION Fieldbus	– XA00593P – XA00596P	U
FM IS + XP Class I, Division 1, Groups A – D	PMP71, PMP75	– 4 to 20 mA HART – PROFIBUS PA, FOUNDATION Fieldbus	– ZD00187P – ZD00190P	C
CSA IS + XP Class I Division 1, Groups A – D	PMP71, PMP75	– 4 to 20 mA HART – PROFIBUS PA, FOUNDATION Fieldbus	– XA00592P – XA00590P	D
FM/CSA IS + XP Class I Division 1, Groups A – D	PMP71, PMP75	– 4 to 20 mA HART – PROFIBUS PA, FOUNDATION Fieldbus	– XA00592P + ZD00187P – ZD00190P + XA00590P	E
CSA +XP Class I Division 1, Groups B - D, Class II Division 1, Groups E - G, Class III	PMP71, PMP75	– 4 to 20 mA HART – PROFIBUS PA, FOUNDATION Fieldbus	– XA00599P	-

Overfill prevention

- WHG: ZE00260P/00/DE

Configuration data sheet

Level

The following configuration data sheet has to be filled in and to be included in the order when the option "F – Customised level" or the option "I – Customised level + 5-point works calibration certificate" has been selected in feature 50 "Calibration; Unit" of the product structure.

Pressure Engineering Unit

❏ mbar
❏ bar
❏ psi
❏ mmH_2O
❏ mH_2O
❏ ftH_2O
❏ inH_2O
❏ mmHg
❏ inHg
❏ gf/cm^2
❏ kgf/cm^2
❏ Pascal
❏ hPa
❏ kPa
❏ MPa
❏ torr
❏ g/cm^2
❏ kg/cm^2
❏ lb/ft^2
❏ atm

Output Unit (Scaled unit)

Mass	Length	Volume	Volume	Percent
❏ kg	❏ m	❏ l	❏ USgal	❏ %
❏ t	❏ dm	❏ hl	❏ impgal	
❏ lb	❏ cm		❏ USbblPETR	
	❏ mm	❏ m^3		
		❏ ft^3		
	❏ ft			
	❏ inch			

Empty pressure [a]:
Low pressure value (empty) _____ [pres. eng. unit]

Empty calibration [a]:
Low level value (empty) _____ [Scaled Unit]

Full pressure [b]:
High pressure value (full) _____ [pres. eng. unit]

Full calibration [b]:
High level value (full) _____ [Scaled Unit]

Example

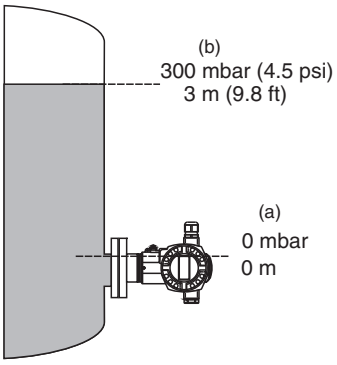

Display Information

Display the contents of the main line [1)]
❏ Main Value [PV] (Default)
❏ Main Value [%]
❏ Pressure
❏ Current [mA] (HART only)
❏ Temperature
❏ Level before lin.
❏ Tank content
❏ Error number
❏ Alternating display

[1)] Depending on sensor and comunication variant

Damping

Damping: _____ sec (Default 2 sec)

Pressure

The following configuration data sheet has to be filled in and to be included in the order when the option "E – Customised pressure" or the option "H – Customised pressure + 5-point works calibration certificate" has been selected in feature 50 "Calibration; Unit" of the product structure.

Pressure Engineerung Unit

❑ mbar	❑ mmH_2O	❑ mmHg	❑ Pascal	❑ torr
❑ bar	❑ mH_2O	❑ inHg	❑ hPa	
	❑ ftH_2O		❑ kPa	❑ g/cm^2
❑ psi	❑ inH_2O	❑ gf/cm^2	❑ MPa	❑ kg/cm^2
		❑ kgf/cm^2		
				❑ lb/ft^2
				❑ atm

Calibration Range / Output

Low range value (LRV): _____ [pressure engineering unit)]
Upper range value (URV): _____ [pressure engineering unit)]

Display Information

Display the contents of the main line [1)]
❑ Main Value [PV] (Default)
❑ Main Value [%]
❑ Pressure
❑ Current [mA] (HART only)
❑ Temperature
❑ Error number
❑ Alternating display

[1)] Depending on sensor and comunication variant

Damping

Damping: _____ sec (Default 2 sec)

Note!
Smallest span (factory calibration) → 🗎 7.

Registered trademarks

HART®	Registered trademark of the HART Communication Foundation, Austin, USA
PROFIBUS®	Registered trademark of the PROFIBUS User Organization, Karlsruhe, Germany
FOUNDATION™ Fieldbus	Registered trademark of the Fieldbus Foundation, Austin, Texas, USA

Patents

This product may be protected by at least one of the following patents.
Further patents are pending.

US Patents	EP Patents	DE Patents
US 5,836,063 A1	EP 0 797 084 B1	
US 5,877,424 A1	EP 0 780 674 B1	
		DE 203 05 869 U1
US 6,363,790 A1	EP 0 995 979 B1	
US 5,670,063 A1	EP 0 516 579 B1	
US 5,539,611 A1		
US 5,050,034 A1	EP 0 445 382 B1	
US 5,005,421 A1	EP 0 351 701 B1	
	EP 0 414 871 B1	
	EP 1 061 351 B1	
US 5,334,344 A1	EP 0 490 807 B1	
US 6,703,943 A1		

Instruments International

Endress+Hauser
Instruments International AG
Kaegenstrasse 2
4153 Reinach
Switzerland

Tel.+41 61 715 81 00
Fax+41 61 715 25 00
www.endress.com
info@ii.endress.com

Endress+Hauser
People for Process Automation

TI00383P/00/EN/18.13
No 71229044
CSS/FM+SGML 9.0

71229044