TI01506P/00/EN/03.21
71521407
2021-04-05

Technical Information
Cerabar PMC51B

Process pressure and level measurement in liquids or gases

Digital pressure transmitter with ceramic process isolating diaphragm

Applications

- Pressure measuring ranges up to 40 bar (600 psi)
- Fully vacuum resistant up to +100 °C (212 °F) process temperature
- Accuracy: up to ±0.055%

Advantages

The new Cerabar generation introduces a robust pressure transmitter that combines numerous benefits: Easiest local or remote operation, allows condition-based maintenance and offers smart safety in processes. The software is designed to simplify the handling. Intuitive and clear wizard navigation guides the user through the commissioning and verification of the device. The Bluetooth connectivity provides a safe and remote operation. The large display guarantees excellent readability. The device features a ceramic membrane for abrasive, high vacuum and corrosive applications with integrated membrane breakage diagnostic.

Endress+Hauser
People for Process Automation

Table of contents

About this document 4
Symbols 4
List of abbreviations 5
Turn down calculation 5

Function and system design 7
Measuring principle 7
Measuring system 7
Communication and data processing 8
Dependability for measuring devices with HART or Bluetooth 8

Input 9
Measured variable 9
Measuring range 9

Output 11
Output signal 11
Signal on alarm 11
Load 11
Damping 12
Ex connection data 12
Linearization 12
Protocol-specific data 12
Wireless HART data 13

Power supply 14
Terminal assignment 14
Available device plugs 14
Supply voltage 15
Potential equalization 16
Terminals 16
Cable entries 16
Cable specification 16
Overvoltage protection 16

Performance characteristics 17
Response time 17
Reference operating conditions 17
Maximum measured error (total performance) 17
Resolution 18
Total error 18
Long-term stability 19
Response time T63 and T90 19
Warm-up period 20

Installation 21
Orientation 21
Installation instructions 21
Sensor selection and arrangement 21
Special mounting instructions 22

Environment 24
Ambient temperature range 24
Storage temperature 24
Operating altitude 24
Climate class 24
Degree of protection 24
Vibration resistance 25
Electromagnetic compatibility (EMC) 25

Process 26
Process temperature range 26
Thermal shock 27
Process pressure range 27
Ultrapure gas applications 27
Steam applications and saturated steam applications 27

Mechanical construction 28
Design, dimensions 28
Dimensions 28
Weight 37
Materials in contact with process 38
Materials not in contact with process 38
Accessories 39

Human interface 40
Operating concept (not for devices with 4 to 20 mA analog) 40
Local operation 40
Local display 41
Remote operation 41
System integration 41
Supported operating tools 41

Certificates and approvals 42
CE mark 42
RCM-Tick marking 42
Ex approvals 42
Hygienic compatibility 42
EAC conformity 42
Certificate of current Good Manufacturing Practices (cGMP) 42
Drinking water approval 42
Overfill prevention (in preparation) 42
Functional safety SIL/ IEC 61508 Declaration of Conformity (optional) 42
Marine approval (pending) 43
Radio approval 43
Test reports 43
Pressure Equipment Directive 2014/68/EU (PED) 43
Oxygen application 44
PWIS-free applications 44
China RoHS symbol 44
RoHS 44
Additional certification 44

Ordering information 45
Ordering information 45
Scope of delivery 45
Measuring point (tag) 45

Accessories 46
Device-specific accessories 46

Device Viewer 46

Supplementary documentation 47
Standard documentation 47
Supplementary device-dependent documentation 47
Field of Activities 47
Special Documentation 47

Registered trademarks 47

About this document

Symbols

Safety symbols

DANGER

This symbol alerts you to a dangerous situation. Failure to avoid this situation will result in serious or fatal injury.

WARNING

This symbol alerts you to a dangerous situation. Failure to avoid this situation can result in serious or fatal injury.

CAUTION

This symbol alerts you to a dangerous situation. Failure to avoid this situation can result in minor or medium injury.

NOTICE

This symbol contains information on procedures and other facts which do not result in personal injury.

Electrical symbols

Ground connection: ⏚

Terminal for connection to the grounding system.

Symbols for certain types of information

Permitted: ✓

Procedures, processes or actions that are permitted.

Forbidden: ✗

Procedures, processes or actions that are forbidden.

Additional information: ℹ

Reference to documentation: 📖

Reference to page: 📄

Series of steps: 1., 2., 3.

Result of an individual step: ↳

Symbols in graphics

Item numbers: 1, 2, 3 ...

Series of steps: 1., 2., 3.

Views: A, B, C, ...

Symbols on the device

Safety instructions: ⚠ → 📖

Observe the safety instructions contained in the associated Operating Instructions.

List of abbreviations

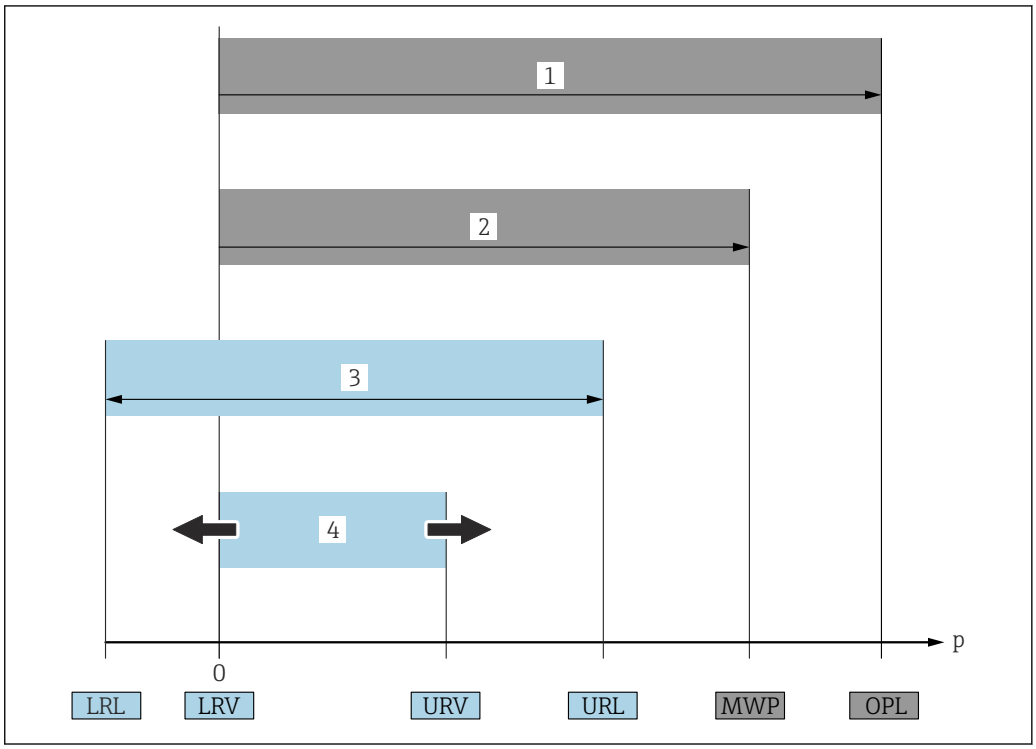

A0029505

1 *OPL: The OPL (over pressure limit = sensor overload limit) for the measuring device depends on the lowest-rated element, with regard to pressure, of the selected components, i.e. the process connection has to be taken into consideration in addition to the measuring cell. Pay attention to the pressure/temperature dependency.*
2 *MWP: The MWP (maximum working pressure) for the sensors depends on the lowest-rated element, with regard to pressure, of the selected components, i.e. the process connection has to be taken into consideration in addition to the measuring cell. Pay attention to the pressure/temperature dependency. The MWP may be applied at the device for an unlimited period of time. The MWP can be found on the nameplate.*
3 *The maximum sensor measuring range corresponds to the span between the LRL and URL. This sensor measuring range is equivalent to the maximum calibratable/adjustable span.*
4 *The calibrated/adjusted span corresponds to the span between the LRV and URV. Factory setting: 0 to URL. Other calibrated spans can be ordered as customized spans.*
p *Pressure*
LRL *Lower range limit*
URL *Upper range limit*
LRV *Lower range value*
URV *Upper range value*
TD *Turn down. Example - see the following section.*

Turn down calculation

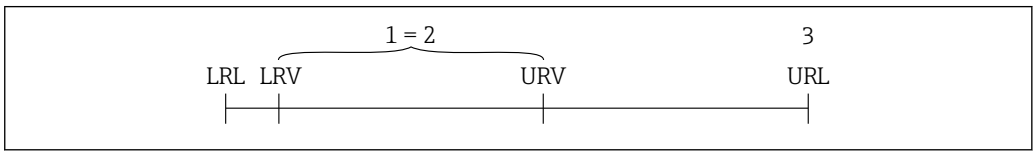

A0029545

1 *Calibrated/adjusted span*
2 *Zero point-based span*
3 *Upper range limit (URL)*

Example:
- Sensor: 10 bar (150 psi)
- Upper range limit (URL) = 10 bar (150 psi)
- Calibrated/adjusted span: 0 to 5 bar (0 to 75 psi)
- Lower range value (LRV) = 0 bar (0 psi)
- Upper range value (URV) = 5 bar (75 psi)

$$TD = \frac{URL}{|URV - LRV|}$$

In this example, the TD is 2:1. This span is based on the zero point.

Function and system design

Measuring principle

Ceramic process isolating diaphragm (Ceraphire®)

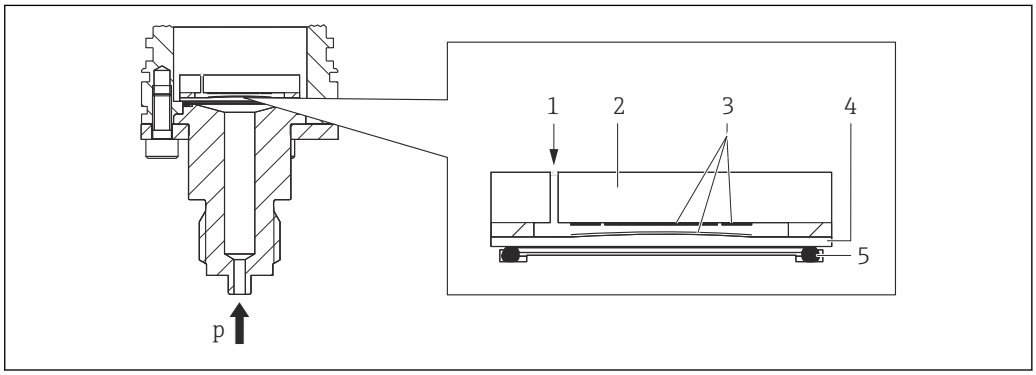

A0043088

1 Air pressure (gauge pressure sensors)
2 Ceramic meter body
3 Electrodes
4 Ceramic process isolating diaphragm
5 Seal
p Pressure

The ceramic sensor is an oil-free sensor. The process pressure acts directly on the robust ceramic process isolating diaphragm and deflects it. A pressure-dependent change in capacitance is measured at the electrodes of the ceramic meter body and the process isolating diaphragm. The measuring range is determined by the thickness of the ceramic process isolating diaphragm.

Advantages:
- High overload resistance
- Thanks to ultrapure 99.9 % ceramic
  - Extremely high chemical durability
  - Resistant to abrasion and corrosion
  - High mechanical durability
- Suitable for vacuums

Measuring system

Level measurement (level, volume and mass):

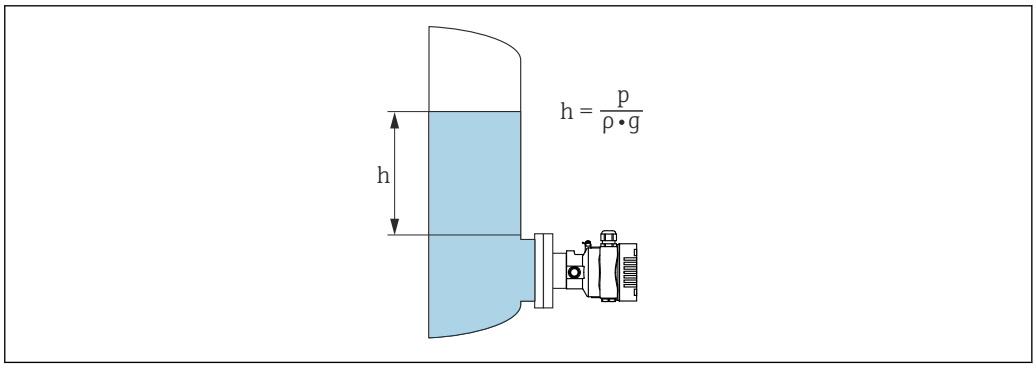

A0038343

h Height (level)
p Pressure
ρ Density of the medium
g Gravitation constant

Advantages:

- Volume and mass measurements in any vessel shape with a freely programmable characteristic curve
- Has a wide range of uses, e.g.
  - For foam formation
  - In vessels with agitators or screen fittings
  - For liquid gases

Communication and data processing

- 4 to 20 mA with HART communication protocol (optional)
- Bluetooth (optional)

Dependability for measuring devices with HART or Bluetooth

IT security

Endress+Hauser can only provide a warranty if the device is installed and used as described in the Operating Instructions. The device is equipped with security mechanisms to protect it against any inadvertent changes to the device settings. IT security measures in line with operators' security standards and designed to provide additional protection for the device and device data transfer must be implemented by the operators themselves.

Device-specific IT security

The device offers specific functions to support protective measures by the operator. These functions can be configured by the user and guarantee greater in-operation safety if used correctly. An overview of the most important functions is provided in the following section:

- Write protection via hardware write protection switch
- Access code (applies for operation via Bluetooth, FieldCare, DeviceCare, ASM, PDM)

Input

Measured variable

Measured process variables

- Absolute pressure
- Gauge pressure

Measuring range

Depending on the device configuration, the MWP and OPL can differ from the values indicated in the table.

Absolute pressure

Sensor	Maximum sensor measuring range		Smallest calibratable span (preset at factory)
	lower (LRL)	upper (URL)	
	[bar_{abs} (psi_{abs})]	[bar_{abs} (psi_{abs})]	[bar (psi)]
100 mbar (1.5 psi)	0	+0.1 (+1.5)	0.005 (0.075) [1]
250 mbar (3.75 psi)	0	+0.25 (+3.75)	0.005 (0.075) [2]
400 mbar (6 psi)	0	+0.4 (+6)	0.005 (0.075) [3]
1 bar (15 psi)	0	+1 (+15)	0.01 (0.15) [4]
2 bar (30 psi)	0	+2 (+30)	0.02 (0.3) [4]
4 bar (60 psi)	0	+4 (+60)	0.04 (0.6) [4]
10 bar (150 psi)	0	+10 (+150)	0.1 (1.5) [4]
40 bar (600 psi)	0	+40 (+600)	0.4 (6) [4]

1) Largest factory-configurable turn down: 20:1
2) Largest factory-configurable turn down: 50:1
3) Largest factory-configurable turn down: 80:1
4) Largest factory-configurable turn down: 100:1

Sensor	MWP	OPL	Vacuum resistance
	[bar_{abs} (psi_{abs})]	[bar_{abs} (psi_{abs})]	[bar_{abs} (psi_{abs})]
100 mbar (1.5 psi)	2.7 (40.5)	4 (60)	0
250 mbar (3.75 psi)	3.3 (49.5)	5 (75)	0
400 mbar (6 psi)	5.3 (79.5)	8 (120)	0
1 bar (15 psi)	6.7 (100.5)	10 (150)	0
2 bar (30 psi)	12 (180)	18 (270)	0
4 bar (60 psi)	16.7 (250.5)	25 (375)	0
10 bar (150 psi)	26.7 (400.5)	40 (600)	0
40 bar (600 psi)	40 (600)	60 (900)	0

Gauge pressure

Sensor	Maximum sensor measuring range		Smallest calibratable span (preset at factory)
	lower (LRL)	upper (URL)	
	[bar (psi)]	[bar (psi)]	[bar (psi)]
100 mbar (1.5 psi)	−0.1 (−1.5)	+0.1 (+1.5)	0.005 (0.075) [1]
250 mbar (3.75 psi)	−0.25 (−3.75)	+0.25 (+3.75)	0.005 (0.075) [2]
400 mbar (6 psi)	−0.4 (−6)	+0.4 (+6)	0.005 (0.075) [3]
1 bar (15 psi)	−1 (−15)	+1 (+15)	0.01 (0.15) [4]
2 bar (30 psi)	−1 (−15)	+2 (+30)	0.02 (0.3) [4]
4 bar (60 psi)	−1 (−15)	+4 (+60)	0.04 (0.6) [4]
10 bar (150 psi)	−1 (−15)	+10 (+150)	0.1 (1.5) [4]
40 bar (600 psi)	−1 (−15)	+40 (+600)	0.4 (6) [4]

1) Largest factory-configurable turn down: 20:1
2) Largest factory-configurable turn down: 50:1
3) Largest factory-configurable turn down: 80:1
4) Largest factory-configurable turn down: 100:1

Sensor	MWP	OPL	Vacuum resistance
	[bar (psi)]	[bar (psi)]	[bar_{abs} (psi_{abs})]
100 mbar (1.5 psi)	2.7 (40.5)	4 (60)	0.7 (10.5)
250 mbar (3.75 psi)	3.3 (49.5)	5 (75)	0.5 (7.5)
400 mbar (6 psi)	5.3 (79.5)	8 (120)	0
1 bar (15 psi)	6.7 (100.5)	10 (150)	0
2 bar (30 psi)	12 (180)	18 (270)	0
4 bar (60 psi)	16.7 (250.5)	25 (375)	0
10 bar (150 psi)	26.7 (400.5)	40 (600)	0
40 bar (600 psi)	40 (600)	60 (900)	0

Output

Output signal

Current output

4 to 20 mA analog, 2-wire

4 to 20 mA with superimposed digital communication protocol HART, 2-wire

The current output offers a choice of three different operating modes:
- 4.0 to 20.5 mA
- NAMUR NE 43: 3.8 to 20.5 mA (factory setting)
- US mode: 3.9 to 20.8 mA

Signal on alarm

Signal on alarm in accordance with NAMUR recommendation NE 43.

- 4 to 20 mA analog:
  - Signal over-range: > 20.5 mA
  - Signal under-range: < 3.8 mA
  - Min alarm (< 3.6 mA, factory setting)
- 4 to 20 mA HART:
  Options:
  - Max alarm: can be set from 21.5 to 23 mA
  - Min. alarm: < 3.6 mA (factory setting)

Load

4 to 20 mA Analog

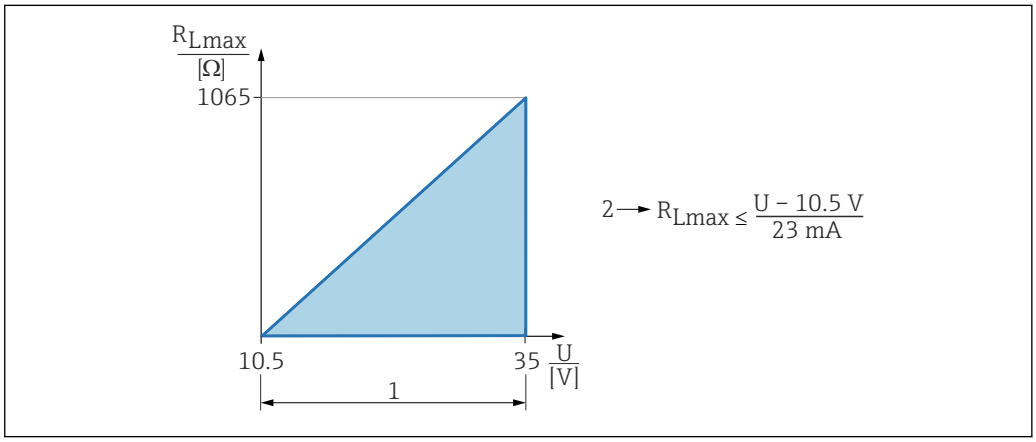

A0039234

1 Power supply 10.5 to 35 V
2 R_{Lmax} maximum load resistance
U Supply voltage

4 to 20 mA HART

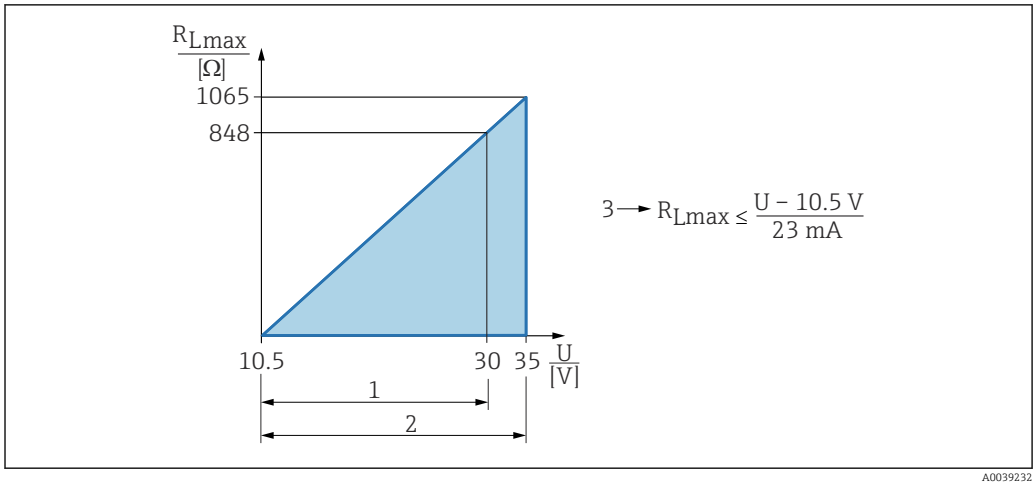

A0039232

1 Power supply 10.5 to 30 VDC Ex i
2 Power supply 10.5 to 35 VDC, for other types of protection and for non-certified device versions
3 R_{Lmax} maximum load resistance
U Supply voltage

Operation via handheld terminal or PC with operating program: take minimum communication resistance of 250 Ω into consideration.

Damping

A damping affects all outputs (output signal, display). Damping can be enabled as follows:
- Via the DIP switch on the electronic insert (analog electronics only)
- Factory setting: 1 s

Ex connection data

See the separate technical documentation (Safety Instructions (XA)) on www.endress.com/download.

Linearization

The device's linearization function allows the user to convert the measured value to any units of height or volume. User-defined linearization tables of up to 32 value pairs can be entered if necessary.

Protocol-specific data

HART

- Manufacturer ID: 17 (0x11{hex})
- Device type ID: 0x112A
- Device revision: 1
- HART specification: 7
- DD revision: 1
- Device description files (DTM, DD) information and files at:
  - www.endress.com
  - www.fieldcommgroup.org
- HART load: min. 250 Ohm

HART device variables (preset at the factory)

The following measured values are assigned to the device variables at the factory:

Device variable	Measured value
Primary variable (PV) [1]	Pressure [2]
Secondary variable (SV)	Sensor temperature

Device variable	Measured value
Tertiary variable (TV)	Electronic temperature
Quaternary variable (QV)	Sensor pressure [3)]

1) The PV is always applied to the current output.
2) The pressure is the calculated signal after damping and position adjustment.
3) The sensor pressure is the raw sensor signal before damping and position adjustment.

Choice of HART device variables

- **Pressure** option (after position correction and damping)
- Scaled variable
- Sensor temperature
- **Sensor pressure** option Sensor Pressure is the raw signal from sensor before damping and position adjustment.
- Electronics temperature
- Percent of range
- **Loop current** optionThe loop current is the output current set by the applied pressure.

Supported functions

- Burst mode
- Additional transmitter status
- Device locking

Wireless HART data

- Minimum starting voltage: 10.5 V
- Start-up current: >3.6 mA
- Starting time: <5 s
- Minimum operating voltage: 10.5 V
- Multidrop current: 4 mA

Power supply

Terminal assignment

Single compartment housing

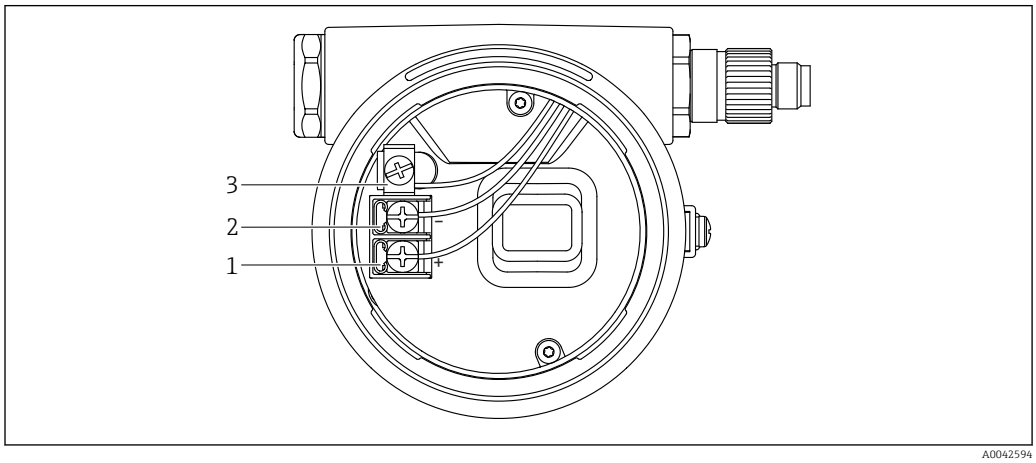

1 Connection terminals and ground terminal in the connection compartment

1 Positive terminal
2 Negative terminal
3 Internal ground terminal

Available device plugs

In the case of devices with a plug, the housing does not have to be opened to establish the connection.

Use the enclosed seals to prevent the penetration of moisture into the device.

Measuring devices with a valve plug

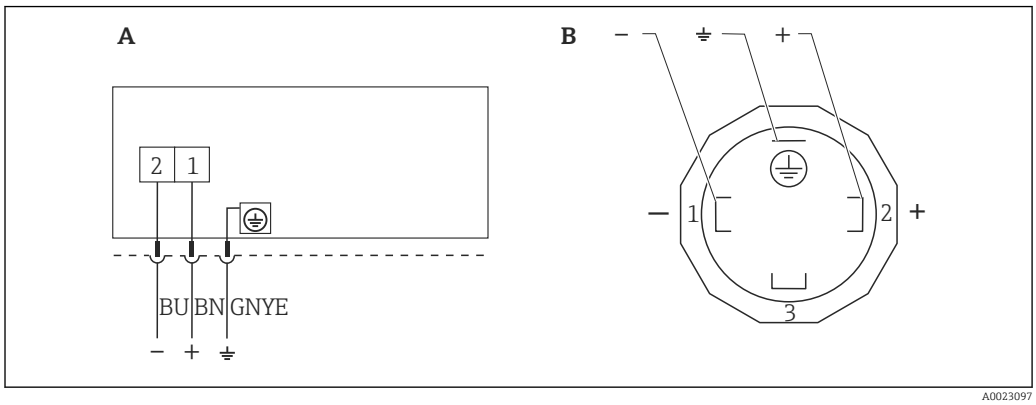

2 BN = brown, BU = blue, GNYE = green/yellow

A Electrical connection for devices with valve connector
B View of the plug-in connection on the device

Material: PA 6.6

Measuring devices with M12 plug

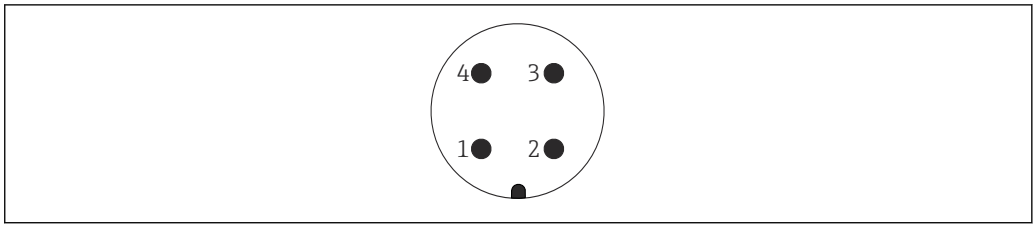

A0011175

1 Signal +
2 Not assigned
3 Signal –
4 Ground

Endress+Hauser offers the following accessories for devices with an M12 plug:

Plug-in jack M 12x1, straight
- Material:
  Body: PBT; union nut: nickel-plated die-cast zinc; seal: NBR
- Degree of protection (fully locked): IP67
- Order number: 52006263

Plug-in jack M 12x1, elbowed
- Material:
  Body: PBT; union nut: nickel-plated die-cast zinc; seal: NBR
- Degree of protection (fully locked): IP67
- Order number: 71114212

Cable 4x0.34 mm^2 (20 AWG) with M12 plug-in jack, elbowed, screw plug, length 5 m (16 ft)
- Material: body: TPU; union nut: nickel-plated die-cast zinc; cable: PVC
- Degree of protection (fully locked): IP67/68
- Order number: 52010285
- Cable colors
  - 1 = BN = brown
  - 2 = WT = white
  - 3 = BU = blue
  - 4 = BK = black

Measuring devices with Harting plug Han7D

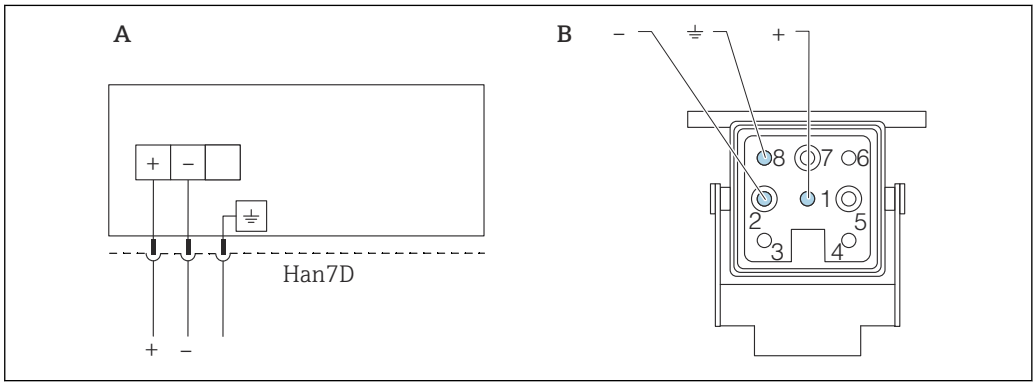

A0041011

A Electrical connection for devices with Harting plug Han7D
B View of the plug-in connection on the device

Material: CuZn, contacts for plug-in jack and connector are gold-plated

Supply voltage

- Ex d, Ex e, non-Ex: supply voltage: 10.5 to 35 VDC
- Ex i: supply voltage: 10.5 to 30 VDC
- Nominal current: 4 to 20 mA HART

The power unit must be tested to ensure it meets safety requirements (e.g. PELV, SELV, Class 2).

A suitable circuit breaker should be provided for the device in accordance with IEC/EN 61010.

Potential equalization

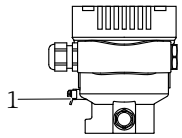

A0045411

1 Ground terminal for connecting the potential matching line

If necessary, the potential matching line can be connected to the outer ground terminal of the transmitter before the device is connected.

For optimum electromagnetic compatibility:
- Keep the potential matching line as short as possible
- Maintain a cross-section of at least 2.5 mm^2 (14 AWG)

Terminals

- Supply voltage and internal ground terminal: 0.5 to 2.5 mm^2 (20 to 14 AWG)
- External ground terminal: 0.5 to 4 mm^2 (20 to 12 AWG)

Cable entries

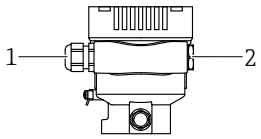

A0045413

1 Cable entry
2 Dummy plug

A0045413

The type of cable entry depends on the device version ordered.

Always route connecting cables downwards so that moisture cannot penetrate the connection compartment.

If necessary, create a drip loop or use a weather protection cover.

Cable specification

- The cable outer diameter depends on the cable entry used
- Cable outer diameter
  - Plastic: Ø5 to 10 mm (0.2 to 0.38 in)
  - Nickel-plated brass: Ø7 to 10.5 mm (0.28 to 0.41 in)
  - Stainless steel: Ø7 to 12 mm (0.28 to 0.47 in)

Overvoltage protection

Devices without optional overvoltage protection

Equipment from Endress+Hauser fulfills the requirements of the product standard IEC / DIN EN 61326-1 (Table 2 Industrial Environment).

Depending on the type of port (DC power supply, input/output port) different testing levels according to IEC / DIN EN 61326-1 against transient overvoltages (Surge) are applied (IEC / DIN EN 61000-4-5 Surge):
Test level on DC power ports and input / output ports is 1000 V line to earth

Overvoltage category

Overvoltage category II

Performance characteristics

Response time

- Acyclic: min. 330 ms, typically 590 ms (depends on commands and number of preambles)
- Cyclic (burst): min. 160 ms, typically 350 ms (depends on commands and number of preambles)

Reference operating conditions

- As per IEC 62828-2
- Ambient temperature T_A = constant, in the range +21 to +33 °C (+70 to +91 °F)
- Humidity φ = constant, in the range: 5 to 80 % RH ± 5 %
- Ambient pressure p_U = constant, in the range: 860 to 1060 mbar (12.47 to 15.37 psi)
- Position of the measuring cell: horizontal ±1°
- Input of LOW SENSOR TRIM and HIGH SENSOR TRIM for lower range value and upper range value
- Supply voltage: 24 V DC ±3 V DC
- Load with HART: 250 Ω
- Turn down (TD) = URL/ | URV - LRV |
- Zero based span

Maximum measured error (total performance)

The performance characteristics refer to the accuracy of the measuring device. The factors influencing accuracy can be divided into two groups
- Total performance of measuring device
- Installation factors

All performance characteristics are in conformance with ≥ ± 3 sigma.

The total performance of the measuring device comprises the reference accuracy and the ambient temperature effect and is calculated using the following formula:

Total performance = $\pm \sqrt{(E1)^2 + (E2)^2}$

E1 = Reference accuracy

E2 = Temperature effect

Calculation of E2:

Temperature effect per ±28 °C (50 °F)

(corresponds to the range from −3 to +53 °C (+27 to +127 °F))

$E2 = E2_M + E2_E$

$E2_M$ = Main temperature error

$E2_E$ = Electronics error

The values refer to the calibrated span.

Calculation of the total performance with the Endress+Hauser Applicator

Detailed measured errors, such as for other temperature ranges, for example, can be calculated with the Applicator "Sizing Pressure Performance".

A0038927

Reference accuracy [E1]

The reference accuracy comprises the non-linearity according to the limit point method, pressure hysteresis and non-repeatability in accordance with [IEC62828-1 / IEC 61298-2]. Reference accuracy for standard up to TD 100:1, for platinum up to TD 10:1.

Gauge pressure sensors

100 mbar (1.5 psi) sensor
- Standard: TD ≤ 10:1 = ±0.15 %; TD > 10:1 = ±0.015 % · TD
- Platinum: TD ≤ 10:1 = ±0.075 %

250 mbar (3.75 psi) sensor
- Standard: TD ≤ 10:1 = ±0.1 %; TD > 10:1 = ±0.01 % · TD
- Platinum: TD ≤ 10:1 = ±0.075 %

400 mbar (6 psi), 1 bar (15 psi), 2 bar (30 psi), 4 bar (60 psi), 10 bar (150 psi) and 40 bar (600 psi) sensor
- Standard: TD ≤ 10:1 = ±0.075 %; TD > 10:1 = ±0.0075 % · TD
- Platinum: TD ≤ 10:1 = ±0.055 %

Absolute pressure sensors

100 mbar (1.5 psi) sensor
- Standard: TD ≤ 10:1 = ±0.15 %; TD > 10:1 = ±0.015 % · TD
- Platinum: TD ≤ 10:1 = ±0.075 %

250 mbar (3.75 psi) sensor
- Standard: TD ≤ 10:1 = ±0.1 %; TD > 10:1 = ±0.01 % · TD
- Platinum: TD ≤ 10:1 = ±0.075 %

400 mbar (6 psi), 1 bar (15 psi), 2 bar (30 psi), 4 bar (60 psi), 10 bar (150 psi) and 40 bar (600 psi) sensor
- Standard: TD ≤ 10:1 = ±0.075 %; TD > 10:1 = ±0.0075 % · TD
- Platinum: TD ≤ 10:1 = ±0.055 %

Temperature effect [E2]

$E2_M$ - Main temperature error

The output changes due to the effect of the ambient temperature [IEC 62828-1 / IEC 61298-3] with respect to the reference temperature [IEC 62828-1 / DIN 16086]. The values specify the maximum error due to min./max. ambient or process temperature conditions.

100 mbar (1.5 psi), 250 mbar (3.75 psi) and 400 mbar (6 psi) sensor
- Standard: ±(0.277 % · TD + 0.275 %)
- Platinum: ±(0.277 % · TD + 0.275 %)

1 bar (15 psi), 2 bar (30 psi), 4 bar (60 psi), 10 bar (150 psi) and 40 bar (600 psi) sensor
- Standard: ±(0.157 % · TD + 0.235 %)
- Platinum: ±(0.157 % · TD + 0.235 %)

$E2_E$ - Electronics error

- Analog output (4 to 20 mA): 0.2 %
- Digital output (HART): 0 %

Resolution

Current output: <1 µA

Total error

The total error of the measuring device comprises the total performance and the influence of long-term stability and is calculated using the following formula:

Total error = total performance + long-term stability

Calculation of the total error with the Endress+Hauser Applicator

Detailed measured errors, such as for other temperature ranges, for example, can be calculated with the Applicator "Sizing Pressure Performance".

A0038927

Long-term stability

The specifications refer to the upper range limit (URL).

100 mbar (1.5 psi), 250 mbar (3.75 psi), 400 mbar (6 psi) and 1 bar (15 psi) sensor
- 1 year: ±0.20 %
- 5 years: ±0.40 %
- 10 years: ±0.50 %

2 bar (30 psi), 4 bar (60 psi), 10 bar (150 psi) and 40 bar (600 psi) sensor
- 1 year: ±0.10 %
- 5 years: ±0.25 %
- 10 years: ±0.40 %

Response time T63 and T90

Dead time, time constant

Presentation of the dead time and the time constant as per DIN 16086:

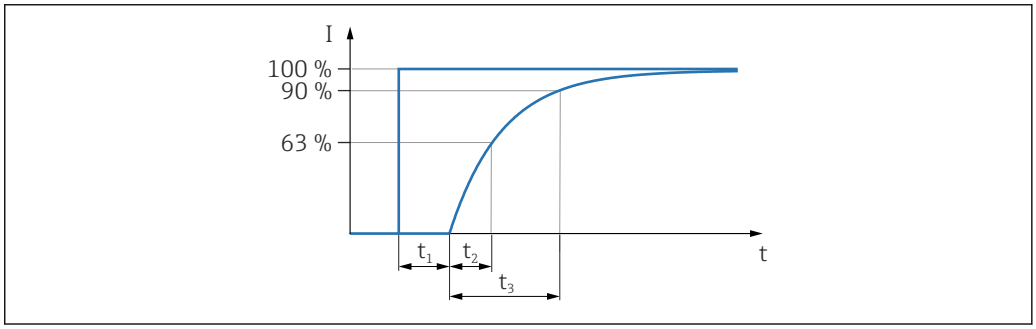

A0019786

Dynamic behavior, current output (analog electronics)

- Dead time (t_1): maximum 50 ms
- Time constant T63 (t_2): maximum 40 ms
- Time constant T90 (t_3): maximum 90 ms

Dynamic behavior, current output (HART electronics)

- Dead time (t_1): maximum 50 ms
- Time constant T63 (t_2): maximum 85 ms
- Time constant T90 (t_3): maximum 200 ms

Dynamic behavior, digital output (HART electronics)

- Dead time (t_1):
  - Minimum 210 ms
  - Maximum 1010 ms
- Time constant T63 (t_2):
  - Minimum 295 ms
  - Maximum 1095 ms
- Time constant T90 (t_3):
  - Minimum 360 ms
  - Maximum 1160 ms

Reading cycle

- Acyclic: max. 3/s, typical 1/s (depends on command # and number of preambles)
- Cyclic (burst): max. 3/s, typical 2/s

The device commands the BURST MODE function for cyclic value transmission via the HART communication protocol.

Cycle time (update time)

Cyclic (burst): min. 300 ms

Warm-up period

≤5 s

Installation

Orientation

- A position-dependent zero point shift (when the vessel is empty the measured value does not display zero) can be corrected
- The use of shutoff devices and/or siphons is recommended for mounting
- The orientation depends on the measuring application

Installation instructions

- The measuring devices are mounted according to the same guidelines as manometers (DIN EN837-2)
- To ensure optimum readability of the onsite display, align the housing and onsite display
- Endress+Hauser offers a mounting bracket for installing the measuring device on pipes or walls
- Use flushing rings for flanges if there is a risk of medium buildup or clogging at the process connection
  - The flushing ring is clamped between the process connection and process
  - Material buildup in front of the process isolating diaphragm is flushed away and the pressure chamber is vented via the two lateral flushing holes
- When measuring in media containing solids (e.g. dirty liquids), installing separators and drain valves is useful for capturing and removing sediment
- Using a valve manifold allows for easy commissioning, installation and maintenance without interrupting the process
- When mounting the device, establishing the electrical connection and during operation: prevent the penetration of moisture into the housing
- Point the cable and connector downwards as much as possible to prevent the penetration of moisture (e.g. rain water or condensation)

Sensor selection and arrangement

Mounting the measuring device

Pressure measurement in gases

Mount the measuring device with the shutoff device above the tapping point so that any condensate can flow into the process.

Pressure measurement in vapors

A siphon reduces the temperature to almost the ambient temperature. The defined water column only causes minimal (negligible) measured errors and minimal (negligible) thermal effects on the device.

Observe the maximum permitted ambient temperature of the transmitter!

- Ideally, mount the measuring device with the O-shaped siphon below the tapping point
  The device may also be mounted above the tapping point
- Fill the siphon with liquid before commissioning

Pressure measurement in liquids

Mount the measuring device with the shutoff device below or at the same level as the tapping point.

Level measurement

- Always mount the measuring device below the lowest measuring point
- Do not install the measuring device at the following positions:
  - In the filling curtain
  - In the tank outlet
  - In the suction area of a pump
  - At a point in the tank which could be affected by pressure pulses from the agitator
- Mount the measuring device downstream from a shutoff device: the calibration and function check can be carried out more easily

Mounting bracket for measuring device or separate housing

The measuring device or separate housing can be mounted on walls or pipes (for pipes with a diameter ranging from 1 ¼" to 2") with the mounting bracket.

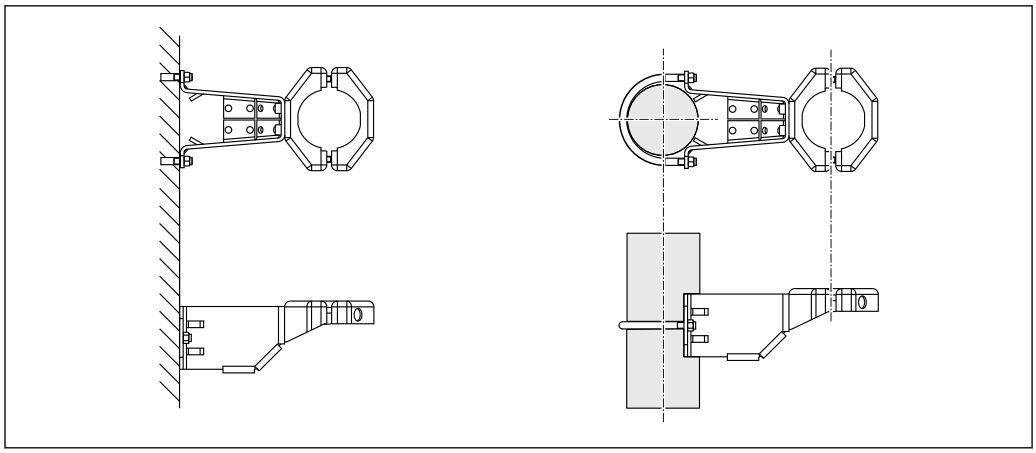

A0032492

Ordering information:
- Can be ordered via the Product Configurator
- Can be ordered as a separate accessory, part number 71102216

If the measuring device is ordered with a separate housing, the mounting bracket is included in the delivery.

Special mounting instructions

Wall and pipe mounting with a manifold (optional)

If the measuring device is mounted on a shutoff device (e.g. manifold or shutoff valve), then use the holder provided for this purpose. This makes it easier to disassemble the measuring device.

For technical data, see the SD01553P accessory document.

Sensor, remote (separate housing)

The measuring device housing (including the electronic insert) is mounted at a distance from the measuring point.

This version therefore facilitates trouble-free measurement
- Under particularly difficult measuring conditions (at installation locations that are cramped or difficult to access)
- If the measuring point is exposed to vibrations

Cable versions:
- PE: 2 m (6.6 ft), 5 m (16 ft) and 10 m (33 ft)
- FEP: 5 m (16 ft).

The sensor is delivered with the process connection and cable already mounted. The housing (including the electronic insert) and a mounting bracket are enclosed as separate units. The cable is provided with a socket at both ends. These sockets are simply connected to the housing (including the electronic insert) and the sensor.

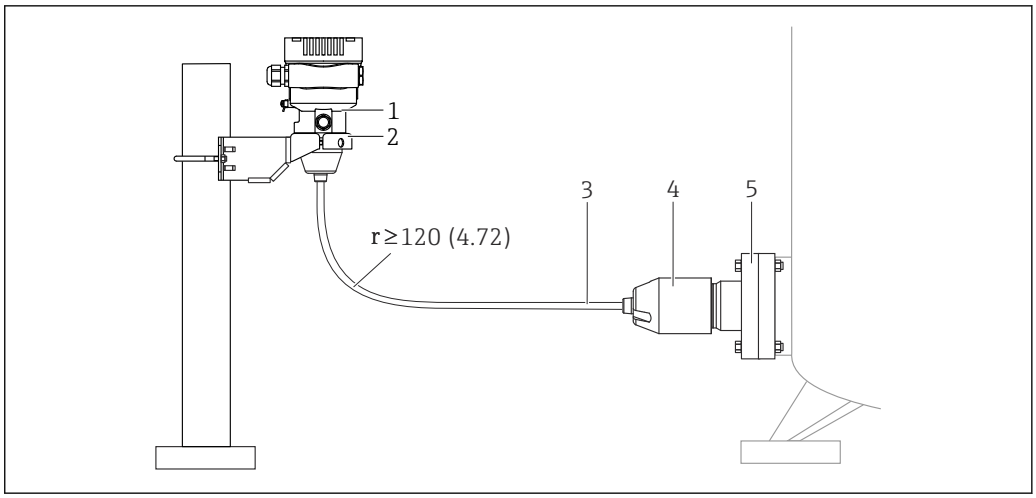

1 Sensor, remote (including electronic insert)
2 Mounting bracket enclosed, suitable for wall or pipe mounting
3 Cable, both ends are fitted with a socket
4 Process connection adapter
5 Process connection with sensor

Ordering information:
- Remote sensor (including electronic insert) including the mounting bracket can be ordered via the Product Configurator
- The mounting bracket can also be ordered as a separate accessory, part number 71102216

Technical data for cables:
- Minimum bending radius: 120 mm (4.72 in)
- Cable extraction force: max. 450 N (101.16 lbf)
- Resistance to UV light

Use in hazardous area:
- Intrinsically safe installations (Ex ia/IS)
- FM/CSA IS for Div. 1 installation only

Reduction of installation height

If this version is used, the installation height of the process connection is reduced compared to the dimensions of the standard version.

Environment

Ambient temperature range

The following values apply up to a process temperature of +85 °C (+185 °F). At higher process temperatures, the permitted ambient temperature is reduced.

- Without LCD display:
  Standard:−40 to +85 °C (−40 to +185 °F)
- With LCD display: −40 to +85 °C (−40 to +185 °F) with limitations in optical properties such as display speed and contrast. Can be used without limitations up to −20 to +60 °C (−4 to +140 °F)
- Separate housing: −20 to +60 °C (−4 to +140 °F)

Hazardous area

- For measuring devices for use in hazardous areas, see Safety Instructions, Installation or Control Drawing
- Measuring devices with common explosion protection certificates (e.g. ATEX-/ IEC Ex, etc.) can be used in hazardous areas up to the ambient temperature.

Storage temperature

- Without LCD display: −40 to +90 °C (−40 to +194 °F)
- Without LCD display: −40 to +90 °C (−40 to +194 °F); optional −50 °C (−58 °F)
- With LCD display: −40 to +85 °C (−40 to +185 °F)
- Separate housing: −40 to +60 °C (−40 to +140 °F)

With M12 plug, elbowed: −25 to +85 °C (−13 to +185 °F)

Operating altitude

Up to 5 000 m (16 404 ft) above sea level.

Climate class

Class 4K4H (air temperature: −20 to +55 °C (−4 to +131 °F), relative humidity: 4 to 100 %) satisfied as per DIN EN 60721-3-4.

Condensation is possible.

Degree of protection

Test as per IEC 60529 and NEMA 250-2014

Housing and process connection

IP66/68, TYPE 4X/6P

(IP68: (1.83 mH_2O for 24 h))

Cable entries

- Gland M20, plastic, IP66/68 TYPE 4X/6P
- Gland M20, brass nickel plated, IP66/68 TYPE 4X/6P
- Gland M20, 316L, IP66/68 TYPE 4X/6P
- Thread M20, IP66/68 TYPE 4X/6P
- Thread G1/2, IP66/68 TYPE 4X/6P
  If the G1/2 thread is selected, the device is delivered with an M20 thread as standard and a G1/2 adapter is included with the delivery, along with the corresponding documentation
- Thread NPT1/2, IP66/68 TYPE 4X/6P
- Dummy plug transport protection: IP22, TYPE 2
- Plug HAN7D, 90 deg. IP65 NEMA Type 4X
- Plug M12
  When housing is closed and connecting cable is plugged in: IP66/67 NEMA Type 4X
  When housing is open or connecting cable is not plugged in: IP20, NEMA Type 1

NOTICE

Plug M12 and plug HAN7D: incorrect mounting can invalidate the IP protection class!

- ▶ The degree of protection only applies if the connecting cable used is plugged in and screwed tight.
- ▶ The degree of protection only applies if the connecting cable used is specified according to IP67 NEMA Type 4X.
- ▶ The IP protection classes are only maintained if the dummy cap is used or the cable is connected.

Process connection and process adapter when using the separate housing

FEP cable

- IP69 (on sensor side)
- IP66 TYPE 4/6P
- IP68 (1.83 mH_2O for 24 h) TYPE 4/6P

PE cable

- IP69 (on sensor side)
- IP66 TYPE 4/6P
- IP68 (1.83 mH_2O for 24 h) TYPE 4/6P

Vibration resistance

Single compartment housing

Mechanical construction	Sine wave oscillation IEC 61298-3:2008	Shock
Measuring device	10 Hz to 60 Hz: ±0.35 mm (0.0138 in) 60 Hz to 1000 Hz: 5 g	30 g
Measuring device with Ex d and XP version [1]	10 Hz to 60 Hz: ±0.15 mm (0.0059 in) 60 Hz to 1000 Hz: 2 g	30 g

1) Not for the high-temperature version with Ex d and XP.

Electromagnetic compatibility (EMC)

- Electromagnetic compatibility as per EN 61326 series and NAMUR recommendation EMC (NE21)
- With regard to the safety function (SIL), the requirements of EN 61326-3-x are satisfied
- Maximum deviation with interference influence: < 0.5% of span with full measuring range (TD 1:1)

For more details refer to the EU Declaration of Conformity.

Process

Process temperature range

NOTICE

The permitted process temperature depends on the process connection, process seal, ambient temperature and the type of approval.

- ▶ All the temperature data in this document must be taken into consideration when selecting the measuring device.

−40 to +100 °C (−40 to +212 °F)

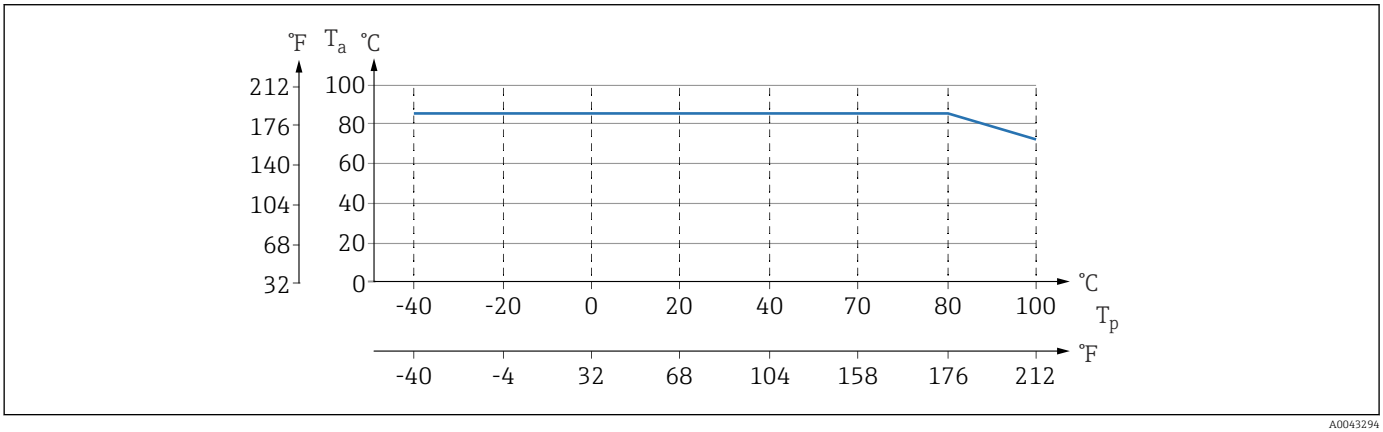

3 Values apply for vertical mounting without insulation.

T_p Process temperature
T_a Ambient temperature

The process temperature ranges indicated here refer to the permanent operation of the measuring device (maximum deviation of 5 °C (41 °F) is permitted)

Pay attention to the process temperature range of the seal. The temperatures indicated depend on the resistance of the seal to the medium.
- FKM: −25 to +100 °C (−13 to +212 °F)
- FKM, cleaned for oxygen service: −10 to +60 °C (+14 to +140 °F)
- FFKM Perlast G75LT: −20 to +100 °C (−4 to +212 °F)
- FFKM Kalrez 6375: +5 to +100 °C (+41 to +212 °F)
- FFKM Chemraz 505: −10 to +100 °C (+14 to +212 °F)
- EPDM: −40 to +100 °C (−40 to +212 °F)
- HNBR: −25 to +100 °C (−13 to +212 °F)

Standard measuring device (without a diaphragm seal)

Oxygen applications (gaseous)

Oxygen and other gases can react explosively to oils, grease and plastics. The following precautions must be taken:
- All components of the plant, such as the measuring devices, must be cleaned according to national requirements.
- Depending on the materials used, a certain maximum temperature and a maximum pressure must not be exceeded for oxygen applications.

Cleaning of the measuring device (not device accessories) is offered as an optional service.

Measuring devices with sensors, nominal value < 10 bar (150 psi)
- p_{max}: over pressure limit (OPL) of the sensor and depending on the process connection used
- Measuring devices with PVDF thread or PVDF flange:
  - Only mount with the enclosed mounting bracket!
  - p_{max}: 15 bar (225 psi)
- T_{max} environment: 60 °C (140 °F)

Measuring devices with sensors, nominal value ≥ 10 bar (150 psi)
- p_{max}: 40 bar (600 psi)
- T_{max} environment: 60 °C (140 °F)

Thermal shock

Applications with jumps in temperature

Extreme jumps in temperature can result in temporary measuring errors. Temperature compensation takes place after a few minutes. Internal temperature compensation is faster the smaller the jump in temperature and the longer the time interval involved.

For more information: contact the Endress+Hauser sales office.

Process pressure range

Pressure specifications

WARNING

The maximum pressure for the measuring device depends on the lowest-rated element with regard to pressure (components are: process connection, optional mounted parts or accessories).

- Only operate the measuring device within the prescribed limits of the components!
- MWP (maximum working pressure): The MWP is specified on the nameplate. This value refers to a reference temperature of +20 °C (+68 °F) and may be applied to the device for an unlimited time. Note temperature dependence of MWP. For flanges, refer to the following standards for the permitted pressure values at higher temperatures: EN 1092-1 (with regard to their stability/temperature property, the materials 1.4435 and 1.4404 are grouped together under EN 1092-1; the chemical composition of the two materials can be identical.), ASME B 16.5a, JIS B 2220 (the latest version of the standard applies in each case). MWP data that deviate from this are provided in the relevant sections of the Technical Information.
- The test pressure corresponds to the overpressure limit (OPL) of the overall system. This value refers to a reference temperature of +20 °C (+68 °F).
- The Pressure Equipment Directive (2014/68/EU) uses the abbreviation "PS". The abbreviation "PS" corresponds to the MWP (maximum working pressure) of the measuring device.
- In the case of sensor range and process connection combinations where the over pressure limit (OPL) of the process connection is smaller than the nominal value of the sensor, the device is set at the factory, at the very maximum, to the OPL value of the process connection. If the entire sensor range must be used, select a process connection with a higher OPL value (1.5 x PN; MWP = PN).
- Oxygen applications: do not exceed values for P_{max} and T_{max}.

Ultrapure gas applications

Endress+Hauser also offers measuring devices for special applications, such as for ultrapure gas, which are cleaned from oil and grease. No special restrictions regarding the process conditions apply to these measuring devices.

Steam applications and saturated steam applications

For steam and saturated steam applications: use a measuring device with a metal process membrane, or provide a siphon for temperature isolation when installing.

Mechanical construction

For the dimensions, see the Product Configurator: www.endress.com

Search for product → Start configuration → after configuration, click "CAD"

The following dimensions are rounded values. For this reason, the dimensions may deviate from the values on www.endress.com.

Design, dimensions

Device height

The device height is calculated from
- the height of the housing
- the height of the individual process connection

The individual heights of the components can be found in the following sections. To calculate the device height, add the individual heights of the components. Take the installation clearance into consideration (space that is used to install the device).

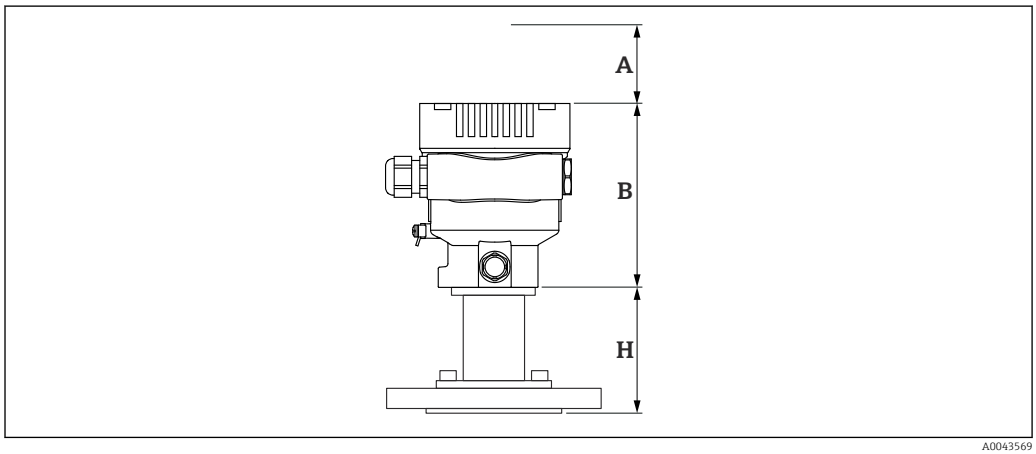

A0043569

A Installation clearance
B Height of the housing
H Height of the process connection

Dimensions

Single compartment housing

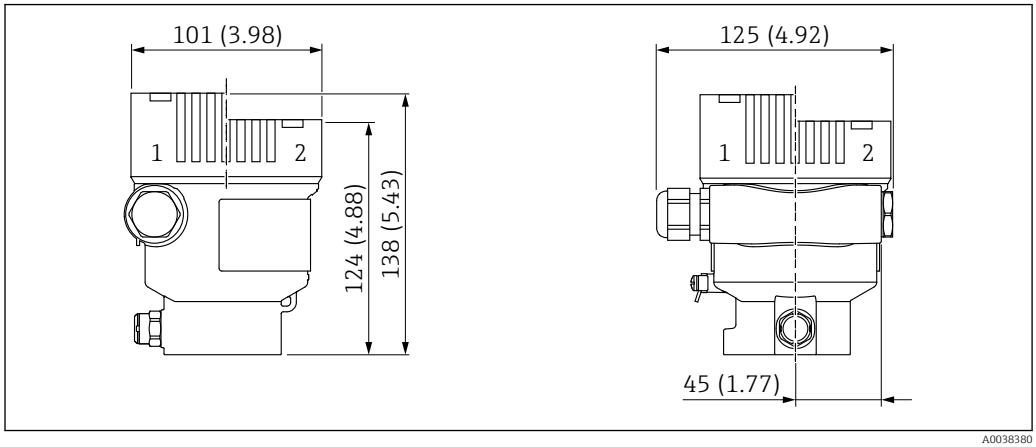

A0038380

Unit of measurement mm (in)

1 122 mm (4.80 in) height with cover with plastic viewing window; 138 mm (5.43 in) height with cover with glass viewing window (devices for Ex d, dust Ex)
2 Cover without viewing window

Sensor, remote (separate housing)

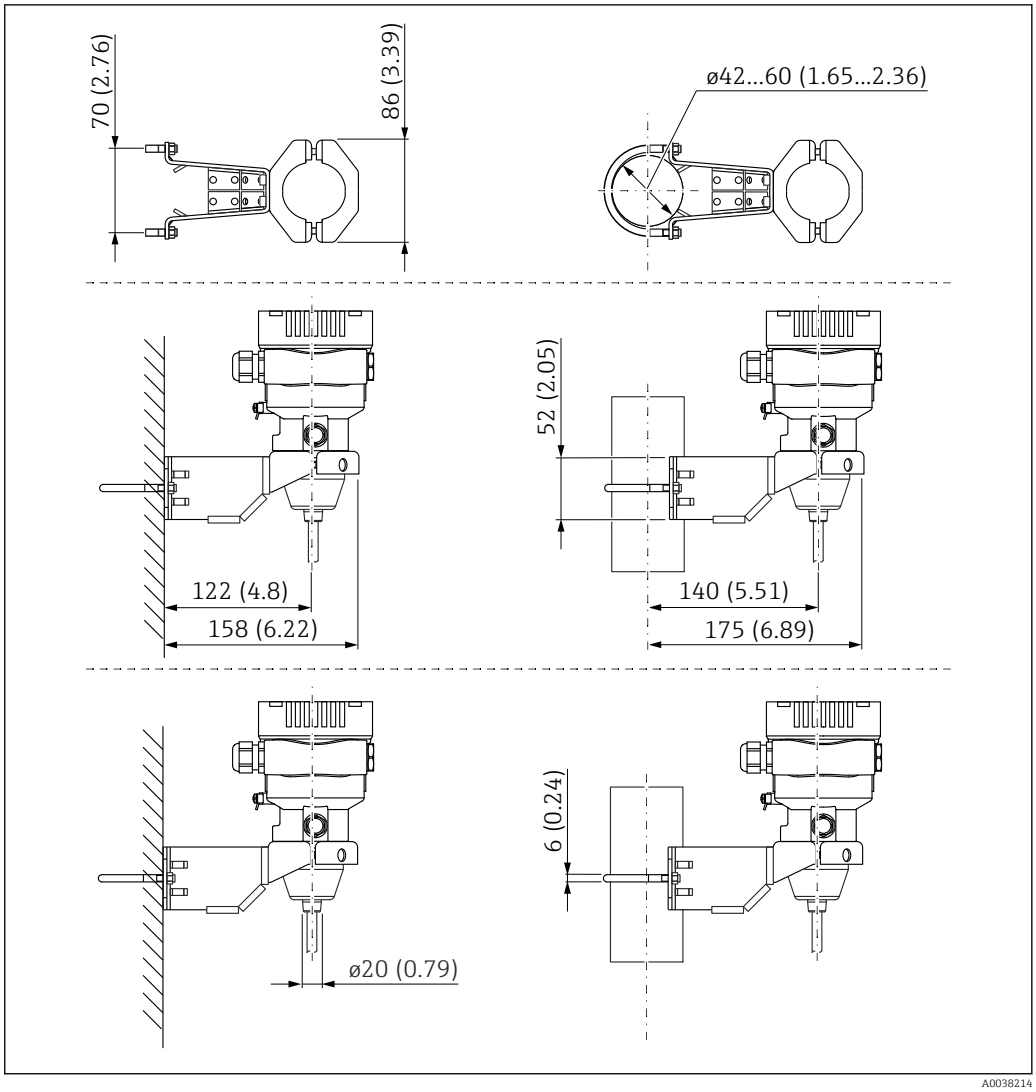

Unit of measurement mm (in)

Height H

Process connection	Height H	
	Standard	**Ex d version**
FNPT1/2 MNPT1/2 MNPT1/2 FNPT1/4 G1/2 M20x1.5 B0202 B0203	28 mm (1.1 in)	94 mm (3.7 in)
MNPT1-1/2 MNPT2 G1-1/2 G2 M44x1.25	59 mm (2.32 in)	125 mm (4.92 in)
Flanges	83 mm (3.27 in)	150 mm (5.91 in)

OPL and MWP

The maximum OPL and MWP of the sensor can deviate from the maximum OPL and MWP of the process connection.

For the maximum OPL and MWP, see the technical documentation of the process connection.

Explanation of terms

- DN or NPS or A = alphanumeric designation of the flange size
- PN or Class or K = alphanumeric pressure rating of a component

Thread ISO228 G, internal process isolating diaphragm

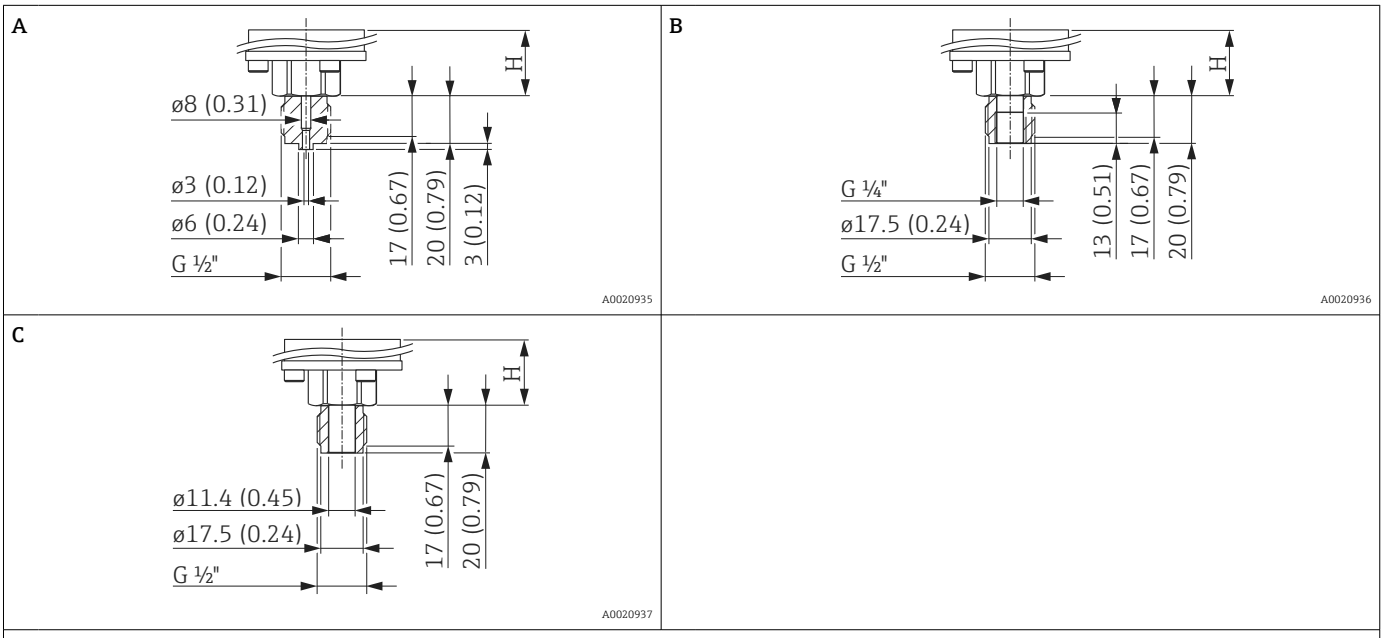

Item	Designation	Material	Weight [1] kg (lb)
A	Thread ISO228 G ½" A EN837	AISI 316L	0.60 (1.32)
		Alloy C276 (2.4819)	
		PVDF ▪ Only mount with a mounting bracket (included) ▪ MWP 10 bar (150 psi), OPL max. 15 bar (225 psi) ▪ Process temperature range: −10 to +60 °C (+14 to +140 °F)	
B	Thread ISO228 G ½" A, G ¼" (female)	AISI 316L	
		Alloy C276 (2.4819)	
C	Thread ISO228 G ½" A, Hole 11.4 mm (0.45 in)	AISI 316L	
		Alloy C276 (2.4819)	

1) Total weight consisting of the sensor assembly and the process connection.

Thread ASME, NPT, internal process isolating diaphragm

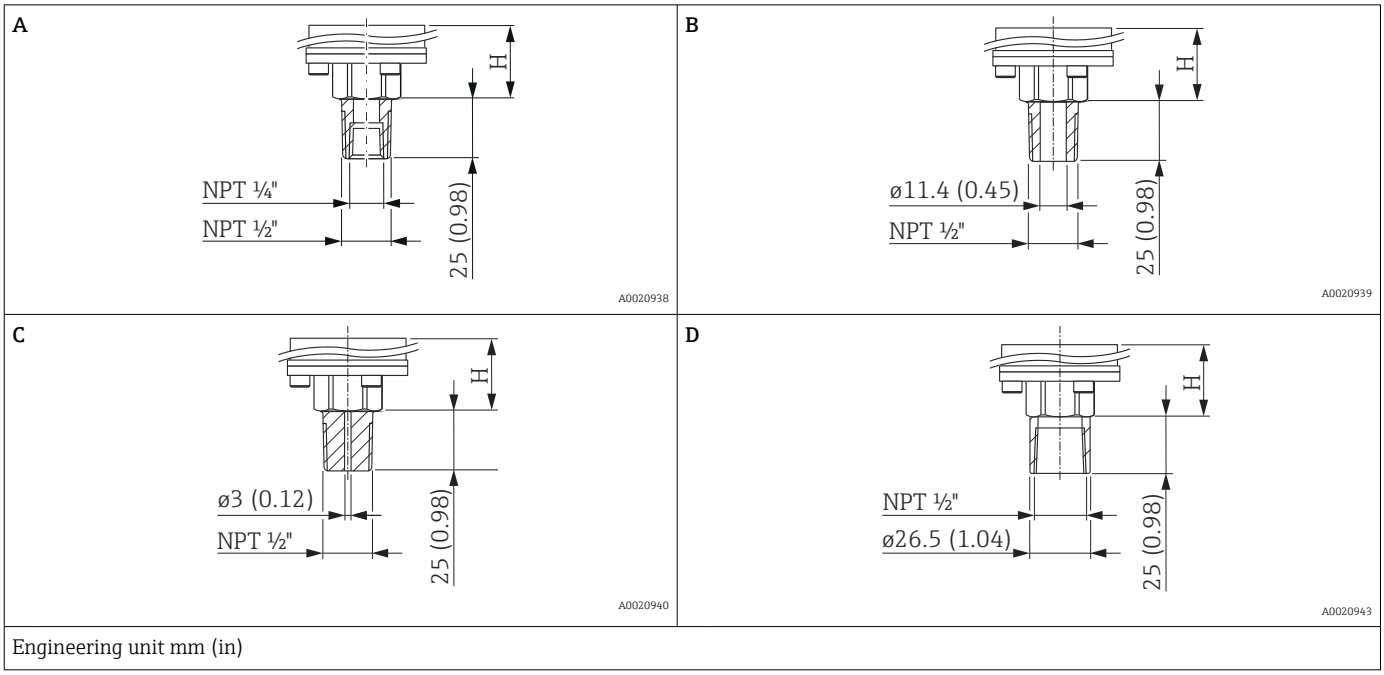

Item	Designation	Material	Weight [1]
			kg (lb)
A	ANSI MNPT ½", FNPT ¼"	AISI 316L	0.60 (1.32)
		Alloy C276 (2.4819)	
B	ANSI MNPT ½", Hole 11.4 mm (0.45 in)	AISI 316L	
		Alloy C276 (2.4819)	
C	ANSI MNPT ½", Hole 3 mm (0.12 in)	**PVDF** ▪ Only mount with a mounting bracket (included) ▪ MWP 10 bar (150 psi), OPL max. 15 bar (225 psi) ▪ Process temperature range: −10 to +60 °C (+14 to +140 °F)	
D	ANSI FNPT ½"	AISI 316L	
		Alloy C276 (2.4819)	

1) Total weight consisting of the sensor assembly and the process connection.

Thread JIS, internal process isolating diaphragm

A

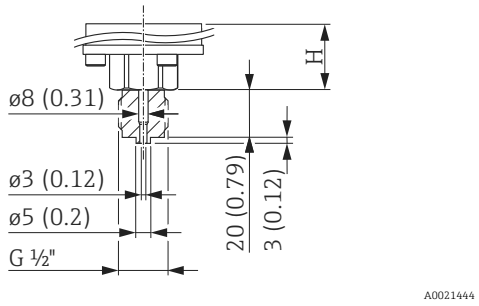

B

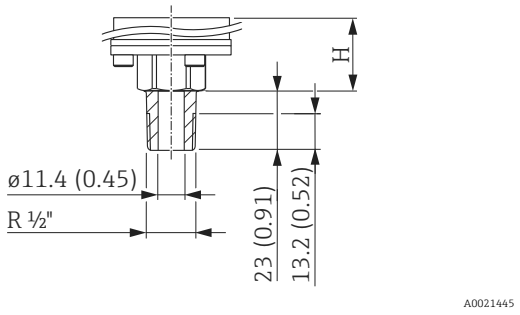

Engineering unit mm (in)

Item	Designation	Material	Weight [1]
			kg (lb)
A	JIS B0202 G ½" (male)	AISI 316L	0.60 (1.32)
B	JIS B0203 R ½" (male)		

1) Total weight consisting of the sensor assembly and the process connection.

Metric thread (DIN 13), internal process isolating diaphragm

A

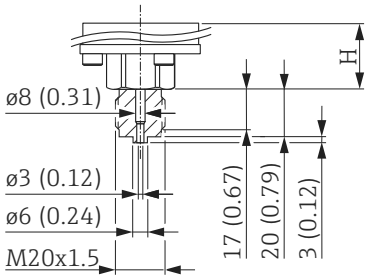

Engineering unit mm (in)

Item	Designation	Material	Weight [1]
			kg (lb)
A	DIN 13 M20 x 1.5, EN837 3 mm (0.12 in)	AISI 316L	0.60 (1.32)
		Alloy C276 (2.4819)	

1) Total weight consisting of the sensor assembly and the process connection.

Thread ISO228 G, flush mount process isolating diaphragm

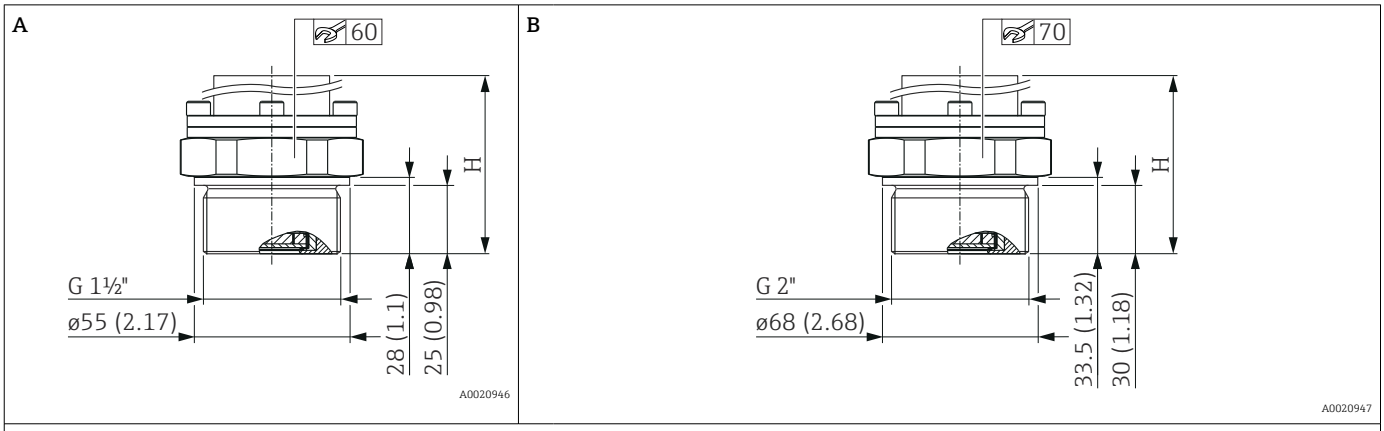

Engineering unit mm (in).

Item	Designation	Material	Weight [1]
			kg (lb)
A	Thread ISO228 G 1 ½" A	AISI 316L	0.8 (1.76)
		Alloy C276 (2.4819)	0.9 (1.98)
B	Thread ISO228 G 2" A	AISI 316L	1.2 (2.65)
		Alloy C276 (2.4819)	1.2 (2.65)

1) Total weight consisting of the sensor assembly and the process connection.

Thread ASME, NPT, flush mount process isolating diaphragm

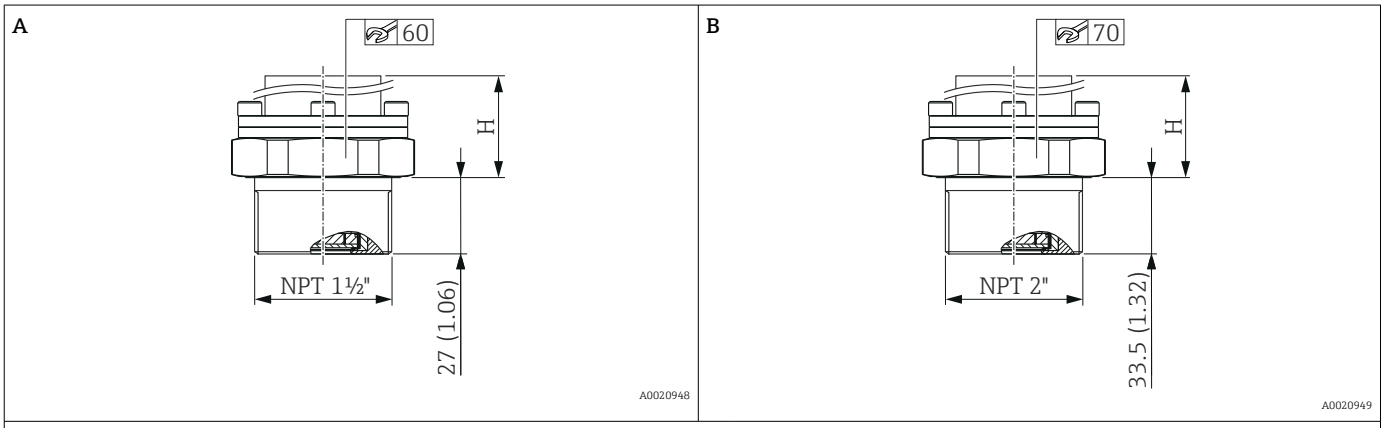

Engineering unit mm (in)

Item	Designation	Material	Weight [1]
			kg (lb)
A	ANSI 1 ½" MNPT	AISI 316L	0.80 (1.76)
B	ANSI 2" MNPT	AISI 316L	1.20 (2.65)

1) Total weight consisting of the sensor assembly and the process connection.

Thread DIN 13, flush mount process isolating diaphragm

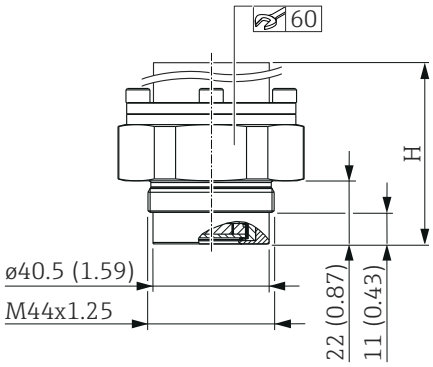

Engineering unit mm (in)

Designation	Material	Weight [1]
		kg (lb)
DIN 13 M44 x 1.25	AISI 316L	0.90 (1.98)

1) Total weight consisting of the sensor assembly and the process connection.

Flange EN1092-1, flush mount process isolating diaphragm

Connection dimensions according to EN1092-1.

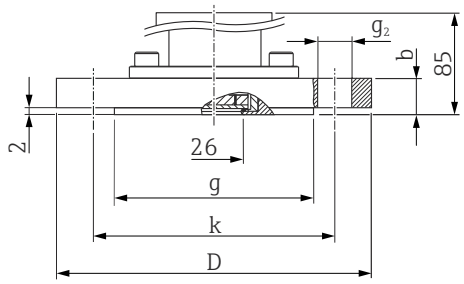

D *Diameter of flange*
b *Thickness*
g *Raised face*
k *Pitch circle*
g_2 *Diameter of hole*

Engineering unit mm

Flange							Boltholes			Weight [1]
Material	DN	PN	Shape	D	b	g	Number	g_2	k	
				mm	mm	mm		mm	mm	kg (lb)
AISI 316L	DN 25	PN 10-40	B1	115	18	68	4	14	85	1.9 (4.19)
AISI 316L	DN 32	PN 10-40	B1	140	18	78	4	18	100	2.5 (5.51)
AISI 316L	DN 40	PN 10-40	B1	150	18	88	4	18	110	3.0 (6.62)
PVDF [2] [3]	DN 40	PN 10-16	B2	150	21.4	88	4	18	110	1.3 (2.87)
ETFE [3]	DN 40	PN 10-40	B2	150	21	88	4	18	110	3.0 (6.62)
AISI 316L	DN 50	PN 10-40	B1	165	20	102	4	18	125	3.5 (7.72)
PVDF [2] [3]	DN 50	PN 10-16	B2	165	21.4	102	4	18	125	1.4 (3.09)
ETFE [3]	DN 50	PN 25-40	B2	165	21	102	4	18	125	3.7 (8.16)
AISI 316L	DN 80	PN 10-40	B1	200	24	138	8	18	160	5.8 (12.79)
ETFE [3]	DN 80	PN 25-40	B2	200	25	138	8	18	160	5.2 (11.47)

1) Total weight consisting of the sensor assembly and the process connection.
2) MWP 10 bar (150 psi), OPL max. 15 bar (225 psi); process temperature range: −10 to +60 °C (+14 to +140 °F)
3) ETFE coating on AISI 316L (1.4404). When using in hazardous areas, avoid electrostatic charging of the plastic surfaces.

Flange ASME B16.5, RF, flush mount process isolating diaphragm

Connection dimensions in accordance with ASME B16.5, raised face RF

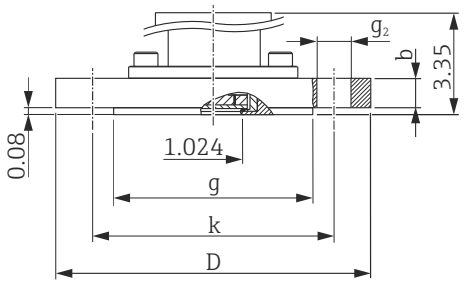

D *Diameter of flange*
b *Thickness*
g *Raised face*
k *Pitch circle*
g_2 *Diameter of hole*

Engineering unit in

Flange						Boltholes			Weight [1]
Material	NPS	Class	D	b	g	Number	g_2	k	
	in		in	in	in		in	in	kg (lb)
AISI 316/316L [2] [3]	1	150	4.25	1.18	2	4	0.62	3.12	2.3 (5.07)
AISI 316/316L [2] [3]	1	300	4.88	1.18	2	4	0.75	3.5	8.5 (18.74)
AISI 316/316L [2]	1 ½	150	5	0.69	2.88	4	0.62	3.88	2.1 (4.63)
AISI 316/316L [2]	1 ½	300	6.12	0.81	2.88	4	0.88	4.5	3.3 (7.28)
AISI 316/316L [2]	2	150	6	0.75	3.62	4	0.75	4.75	3.1 (6.84)
ETFE [4]	2	150	6	0.75	3.62	4	0.75	4.75	3.1 (6.84)
AISI 316/316L [2]	2	300	6.5	0.88	3.62	8	0.75	5	4.0 (8.82)
AISI 316/316L [2]	3	150	7.5	0.94	5	4	0.75	6	5.7 (12.57)
ETFE [4]	3	150	7.5	0.94	5	4	0.75	6	5.7 (12.57)
PVDF [5]	3	150	7.5	0.94	5	4	0.75	6	1.6 (3.53)
AISI 316/316L [2]	3	300	8.25	1.12	5	8	0.88	6.62	7.5 (16.54)
AISI 316/316L [2]	4	150	9	0.94	6.19	8	0.75	7.5	7.6 (16.76)
ETFE [4]	4	150	9	0.94	6.19	8	0.75	7.5	7.8 (17.20)
AISI 316/316L [2]	4	300	10	1.25	6.19	8	0.88	7.88	12.4 (27.34)

1) Total weight consisting of the sensor assembly and the process connection.
2) Combination of AISI 316 for required pressure resistance and AISI 316L for required chemical resistance (dual rated)
3) Screws must be 15 mm (0.59 in) longer than the standard flange screws
4) ETFE coating on AISI 316/316L. When using in hazardous areas, avoid electrostatic charging of the plastic surfaces.
5) MWP 10 bar (150 psi), OPL max. 15 bar (225 psi); process temperature range: −10 to +60 °C (+14 to +140 °F)

Flange JIS B2220, RF, flush mount process isolating diaphragm

Connection dimensions in accordance with JIS B 2220 BL, raised face RF

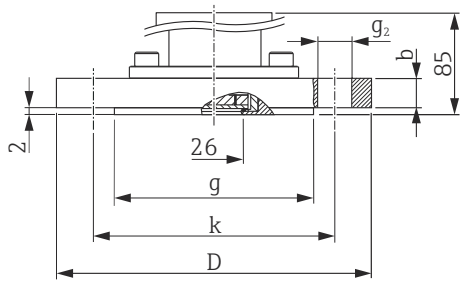

D *Diameter of flange*
b *Thickness*
g *Raised face*
k *Pitch circle*
g_2 *Diameter of hole*

Engineering unit mm

Flange						Boltholes			Weight [1]
Material	A [2]	K [3]	D	b	g	Number	g_2	k	
			mm	mm	mm		mm	mm	kg (lb)
AISI 316L (1.4435)	50 A	10 K	155	16	96	4	19	120	2.9 (6.39)
	80 A	10 K	185	18	127	8	19	150	3.9 (8.60)
	100 A	10 K	210	18	151	8	19	175	5.3 (11.69)

1) Total weight consisting of the sensor assembly and the process connection.
2) Alphanumeric designation of the flange size.
3) Alphanumeric pressure rating of a component.

Weight

Housing

Weight including electronics and display.

- Single compartment housing: 1.1 kg (2.43 lb)
- Dual compartment housing
  - Aluminum: 1.4 kg (3.09 lb)
  - Stainless steel: 3.3 kg (7.28 lb)

Sensor, remote (separate housing)

- Housing: see the Housing section
- Housing adapter: 0.55 kg (1.21 lb)
- Process connection adapter: 0.36 kg (0.79 lb))
- Cable:
  - PE cable 2 meters: 0.18 kg (0.40 lb)
  - PE cable 5 meters: 0.35 kg (0.77 lb)
  - PE cable 10 meters: 0.64 kg (1.41 lb)
  - FEP cable 5 meters: 0.62 kg (1.37 lb)
- Mounting bracket: 0.46 kg (1.01 lb)

Process connections

Weight, see the specific process connection.

Ex d version: 0.63 kg (1.39 lb)

Accessories

Mounting bracket: 0.5 kg (1.10 lb)

Materials in contact with process

Membrane material

Al_2O_3 aluminum-oxide ceramic, ultrapure 99.9 %, Ceraphire® (see also www.endress.com)

Seal

- FKM
- EPDM
- HNBR
- FFKM Perlast G75LT
- FFKM Chemraz 505
- FFKM Kalrez 6375

Process connections

See the specific process connection.

Accessories

For technical data (e.g. materials, dimensions or order numbers), see the accessory document SD01553P.

Materials not in contact with process

Single compartment housing and cover

Polyester powder coating on aluminum as per EN1706 AC43400 (reduced copper content ≤0.1 % to prevent corrosion)

Dual compartment housing and cover

Polyester powder coating on aluminum as per EN1706 AC43400 (reduced copper content to prevent corrosion)

Separate housing

- Mounting bracket
  - Bracket: AISI 316L (1.4404)
  - Screw and nuts: A4-70
  - Half-shells: AISI 316L (1.4404)
- Seal for cable from separate housing: EPDM
- Gland for cable of separate housing: AISI 316L (1.4404)
- PE cable for separate housing: abrasion-proof cable with strain-relief Dynema members; shielded using aluminum-coated foil; insulated with polyethylene (PE-LD), black; copper wires, twisted, UV-resistant
- FEP cable for separate housing: abrasion-proof cable; shielded using galvanized steel wire netting; insulated with fluorinated ethylene propylene (FEP), black; copper cores, twisted, UV-resistant
- Process connection adapter for separate housing: AISI 316L (1.4404)

Aluminum housing nameplate

- Plastic adhesive label
- Versions that can be ordered for use at reduced ambient temperatures: metal wired-on tag plate made of 316L (1.4404)

Cable entries

- M20 gland:
  Plastic, brass nickel plated or 316L (depends on version ordered)
  Dummy plug made of plastic, aluminum or 316L (depends on version ordered)
- Thread M20:
  Dummy plug made of aluminum or 316L (depends on version ordered)
- Thread G1/2:
  Adapter made of aluminum or 316L (depends on version ordered)
  If the G1/2 thread is selected, the device is delivered with an M20 thread as standard and a G1/2 adapter is included with the delivery, along with the corresponding documentation

- Thread NPT1/2:
  Dummy plug made of aluminum or 316L (depends on version ordered)
- Plug M12:
  CuZn nickel-plated or 316L (depends on version ordered)
  Dummy plug made of aluminum or 316L (depends on version ordered)
- Plug HAN7D:
  Aluminum, die-cast zinc, steel
  Dummy plug made of aluminum or 316L (depends on version ordered)

Connecting parts

- Connection between housing and process connection: AISI 316L (1.4404)
- Measuring cell body: AISI 316L (1.4404)

Accessories

For technical data (e.g. materials, dimensions or order numbers), see the accessory document SD01553P.

Human interface

Operating concept (not for devices with 4 to 20 mA analog)

Operator-oriented menu structure for user-specific tasks
- User navigation
- Diagnostics
- Application
- System

Fast and safe commissioning
- Interactive wizard with graphical user interface for guided commissioning in FieldCare, DeviceCare or DTM, AMS and PDM-based third-party tools or SmartBlue
- Menu guidance with brief descriptions of the individual parameter functions
- Standardized operation at the device and in the operating tools

Efficient diagnostics increase measurement availability
- Remedial measures are integrated in plain text
- Diverse simulation options

Bluetooth module (optionally integrated in onsite display)
- Quick and easy setup with SmartBlue App or PC with DeviceCare, version 1.07.00 and higher or FieldXpert SMT70
- No additional tools or adapters required
- Encrypted single point-to-point data transmission (tested by Fraunhofer Institute) and password-protected communication via *Bluetooth*® wireless technology

Local operation

Operating keys and DIP switches on the electronic insert

Analog 4 to 20 mA

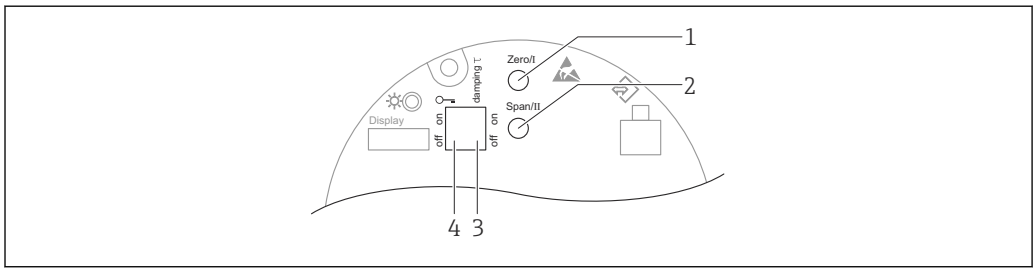

A0039344

1 *Operating key for lower range value (Zero)*
2 *Operating key for upper range value (Span)*
3 *DIP switch for damping*
4 *DIP switch for locking and unlocking the measuring device*

HART

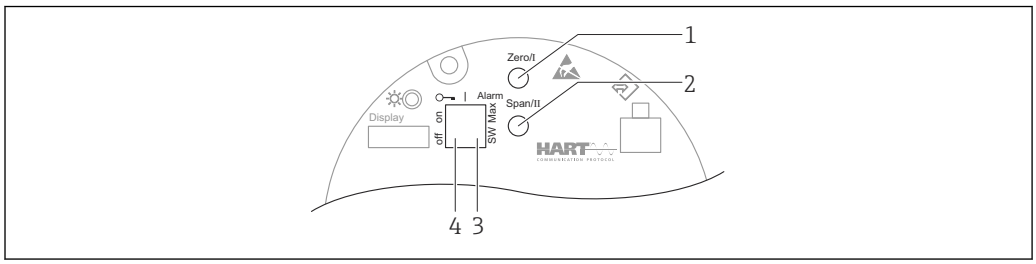

A0039285

1 *Operating key for lower range value (Zero)*
2 *Operating key for upper range value (Span)*
3 *DIP switch for alarm current*
4 *DIP switch for locking and unlocking the measuring device*

The setting of the DIP switches has priority over other operation methods (e.g. FieldCare/DeviceCare).

Local display

Device display (optional)

Functions:
Display of measured values and fault and notice messages

The device displays are available with the additional option of Bluetooth® wireless technology.

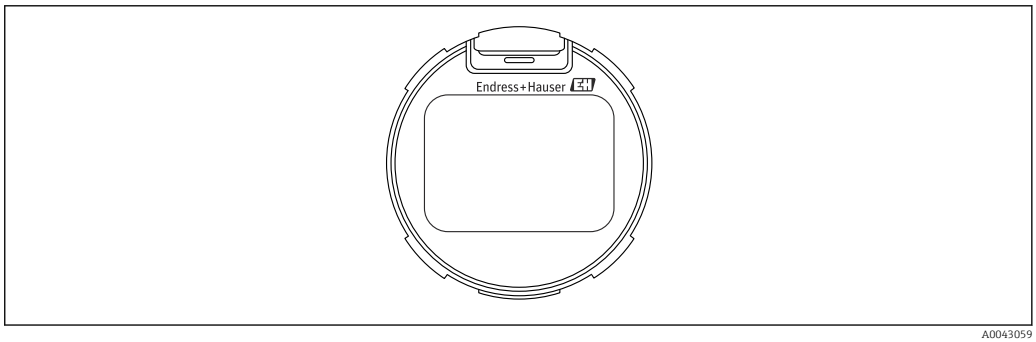

A0043059

4 *Segment display*

Remote operation

Via HART protocol

Via service interface (CDI)

Operation via Bluetooth® wireless technology (optional)

Prerequisite
- Measuring device with Bluetooth display
- Smartphone or tablet with Endress+Hauser SmartBlue App or PC with DeviceCare, version 1.07.00 and higher, or FieldXpert SMT70

The connection range is up to 25 m (82 ft). The range can vary depending on ambient conditions such as fixtures, walls or ceilings.

The operating keys on the display are locked as soon as the device is connected via Bluetooth.

System integration

HART

Version 7

Supported operating tools

Smartphone or tablet with Endress+Hauser SmartBlue (App), DeviceCare version 1.07.00 and higher, FieldCare, DTM, AMS and PDM

Certificates and approvals

Certificates, approvals and other documentation currently available can be accessed on the Endress+Hauser website: www.endress.com → Downloads.

CE mark

The device meets the legal requirements of the relevant EC directives. Endress+Hauser confirms that the device has been successfully tested by applying the CE mark.

RCM-Tick marking

The supplied product or measuring system meets the ACMA (Australian Communications and Media Authority) requirements for network integrity, interoperability, performance characteristics as well as health and safety regulations. Here, especially the regulatory arrangements for electromagnetic compatibility are met. The products bear the RCM-Tick marking on the nameplate.

A0029561

Ex approvals

- ATEX
- CSA (in preparation)
- NEPSI (in preparation)
- INMETRO (in preparation)
- KC (in preparation)
- EAC (in preparation)
- JPN (in preparation)
- Also combinations of different approvals

All the data related to explosion protection is provided in separate Ex documentation which is also available upon request. The Ex documentation is supplied as standard with all devices approved for use in explosion hazardous areas.

Additional approvals in preparation.

Explosion-protected smartphones and tablets

If used in hazardous areas, mobile end devices with an Ex approval must be used.

Hygienic compatibility

The following applies for the ceramic process membrane:

The US Food & Drug Administration (FDA) has no objections to the use of ceramics made from aluminum oxide as a surface material in contact with foodstuffs. This declaration is based on the FDA certificates of our ceramic suppliers.

EAC conformity

The measuring device meets the legal requirements of the applicable EAC Directives. These are listed in the corresponding EAC Declaration of Conformity along with the standards applied.

Endress+Hauser confirms successful testing of the measuring device by affixing to it the EAC mark.

Certificate of current Good Manufacturing Practices (cGMP)

The certificate is available in English only and covers the following topics:
- Materials of construction of product wetted parts
- TSE compliance
- Polishing and surface finish
- Material/ compound compliance table e.g. USP Class VI, FDA conformity

Drinking water approval

- NSF/ANSI 61 drinking water approval
- KTW drinking water approval W 270

Overfill prevention (in preparation)

The measuring device is tested in accordance with the approval guidelines for overfill protection units (ZG-ÜS:2012-07) as overfill protection as per Section 63 of the German Water Resources Act (WHG).

Functional safety SIL/ IEC 61508 Declaration of Conformity (optional)

The measuring devices with a 4-20 mA output signal have been developed in accordance with the IEC 61508 standard. These measuring devices can be used to monitor the process level and pressure

up to SIL 3. For a detailed description of the safety functions, settings and functional safety data, see the "Functional Safety Manual".

Marine approval (pending)

- ABS (American Bureau of Shipping)
- LR (Lloyd's Register)
- BV (Bureau Veritas)
- DNV GL (Det Norske Veritas / Germanischer Lloyd)

Radio approval

Displays with Bluetooth LE have radio licenses according to CE and FCC. The relevant certification information and labels are provided on display.

Test reports

Test, report, declarations

- Inspection certificate 3.1, EN10204 (material certificate, wetted metallic parts)
- NACE MR0175 / ISO 15156 (wetted metallic parts), declaration
- NACE MR0103 / ISO 17945 (wetted metallic parts), declaration
- AD 2000 (wetted metal parts), declaration, excluding process isolating diaphragm
- Pressure test, internal procedure, test report
- Helium leak test, internal procedure, test report
- PMI test, internal procedure (wetted metallic parts), test report

Test reports, declarations and inspection certificates are available in electronic format in the Device Viewer: enter the serial number of the nameplate (www.endress.com/deviceviewer).

Applicable for the order codes "Calibration" and "Test, certificate" .

Product documentation on paper

Test reports, declarations and inspection certificates in hard copy can optionally be ordered with the order option "Product documentation on paper". These documents are supplied with the ordered product.

Calibration

5-point calibration certificate

10-point calibration certificate, traceable to ISO/IEC 17025

Manufacturer declarations

Depending on the desired configuration, the following documents can be additionally ordered with the measuring device:
- FDA conformity
- TSE-free: materials free from animal origin
- Regulation (EC) No. 2023/2006 (GMP)

Downloading the Declaration of Conformity

www.endress.com → Download

Pressure Equipment Directive 2014/68/EU (PED)

Pressure equipment with allowable pressure ≤ 200 bar (2 900 psi)

Pressure equipment (with a maximum allowable pressure PS ≤ 200 bar (2 900 psi)) can be classified as pressure accessories in accordance with Pressure Equipment Directive 2014/68/EU. If the maximum allowable pressure is ≤ 200 bar (2 900 psi) and the pressurized volume of the pressure equipment is ≤ 0.1 l, the pressure equipment is subject to the Pressure Equipment Directive (cf. Pressure Equipment Directive 2014/68/EU, Article 4, point 3). The Pressure Equipment Directive only requires that the pressure equipment shall be designed and manufactured in accordance with the "sound engineering practice of a Member State".

Reasons:

- Pressure Equipment Directive (PED) 2014/68/EU Article 4, point 3
- Pressure equipment directive 2014/68/EU, Commission's Working Group "Pressure", Guideline A-05 + A-06

Note:

A partial examination shall be performed for pressure instruments that are part of safety equipment for the protection of a pipe or vessel from exceeding allowable limits (safety accessory in accordance with Pressure Equipment Directive 2014/68/EU, Article 2, point 4).

Pressure equipment with allowable pressure > 200 bar (2 900 psi)

Pressure equipment designated for application in every process fluid having a pressurized volume of <0.1 l and a max. allowable pressure PS > 200 bar (2 900 psi) must satisfy the essential safety requirements set out in Annex I of the Pressure Equipment Directive 2014/68/EU. According to Article 13 pressure equipment shall be classified by category in accordance with Annex II. Taking into account the low pressurized volume discussed above, the pressure devices are classed as category I pressure equipment. These devices must then bear the CE marking.

Reasons:

- Pressure Equipment Directive 2014/68/EU, Article 13, Annex II
- Pressure equipment directive 2014/68/EU, Commission's Working Group "Pressure", Guideline A-05

Note:

A partial examination shall be performed for pressure instruments that are part of safety equipment for the protection of a pipe or vessel from exceeding allowable limits (safety accessory in accordance with Pressure Equipment Directive 2014/68/EU, Article 2, point 4).

Oxygen application	Verified cleaned, suitable for O2 service (wetted parts)
PWIS-free applications	Special cleaning of the transmitter to remove paint-wetting impairment substances, for use in paint shops, for instance.
China RoHS symbol	The measuring device is visibly identified according to SJ/T 11363-2006 (China-RoHS).
RoHS	The measuring system complies with the substance restrictions of the Restriction on Hazardous Substances Directive 2011/65/EU (RoHS 2).
Additional certification	**Classification of process sealing between electrical systems and (flammable or combustible) process liquids in accordance with UL 122701 (previously ANSI/ISA 12.27.01)** Endress+Hauser devices are designed according to UL 122701 (previously ANSI/ISA 12.27.01) and allow the user to waive the use of - and save the cost of installing - external secondary process seals in the conduit as required by the process sealing sections of ANSI/NFPA 70 (NEC) and CSA 22.1 (CEC). These devices comply with the North-American installation practice and provide a very safe and cost-saving installation for pressurized applications with hazardous process media. The devices are assigned to "single seal" as follows: CSA C/US IS, XP, NI: 40 bar (600 psi) Further information can be found in the control drawings of the relevant devices. **Metrological accreditation** With the order option "China", the measuring device is supplied with a Chinese nameplate in accordance with the Chinese Quality Law.

Ordering information

Ordering information

Detailed ordering information is available from your nearest sales organization www.addresses.endress.com or in the Product Configurator under www.endress.com :

1. Click Corporate
2. Select the country
3. Click Products
4. Select the product using the filters and search field
5. Open the product page

The Configuration button opens the Product Configurator.

Product Configurator - the tool for individual product configuration
- Up-to-the-minute configuration data
- Depending on the device: Direct input of measuring point-specific information such as measuring range or operating language
- Automatic verification of exclusion criteria
- Automatic creation of the order code and its breakdown in PDF or Excel output format
- Ability to order directly in the Endress+Hauser Online Shop

Scope of delivery

The scope of delivery comprises:
- Measuring device
- Optional accessories

Documentation supplied:
- Brief Operating Instructions
- Final inspection report
- Additional safety instructions for devices with approvals (e.g. ATEX, IECEx, NEPSI, etc.)
- Optional: factory calibration form, test certificates

The Operating Instructions are available on the Internet at:

www.endress.com → Download

Measuring point (tag)

- Order code: marking
- Option: Z1, tagging (TAG), see additional specification
- Location of tag identifier: to be selected in the additional specifications
  - Tag plate, stainless steel
  - Self-adhesive paper label
  - Supplied plate
  - RFID TAG
  - RFID TAG + tag plate stainless steel
  - RFID TAG + self-adhesive paper label
  - RFID TAG + supplied label/plate
- Definition of tag name: to be defined in the additional specifications
  3 lines, each containing up to maximum 18 characters
  The specified tag name appears on the selected label and/or the RFID TAG
- Identification on electronic nameplate (ENP): 32 digits

Accessories

Device-specific accessories

Mechanical accessories

- Mounting bracket for housing
- Mounting bracket for block & bleed valves
- Block&bleed valves
- Water siphon (PZW)
- Flushing rings
- Weather protection covers

For technical data (e.g. materials, dimensions or order numbers), see the accessory document SD01553P.

Plug connectors

- Plug connector M12 90 deg, IP67 5m cable, union nut, Cu Sn/Ni
- Plug connector M12, IP67 union nut, Cu Sn/Ni
- Plug connector M12, 90 deg IP67 union nut, Cu Sn/Ni

The IP protection classes are only maintained if the dummy cap is used or the cable is connected.

Weld-in accessory

For details, refer to TI00426F/00/EN "Weld-in adapters, process adapters and flanges".

Device Viewer

All the accessories for the measuring device, along with the order code, are listed in the *Device Viewer* (www.endress.com/deviceviewer).

Supplementary documentation

For an overview of the scope of the associated Technical Documentation, refer to the following:
- *Device Viewer* (www.endress.com/deviceviewer): Enter the serial number from the nameplate
- *Endress+Hauser Operations App*: Enter the serial number from the nameplate or scan the 2D matrix code (QR code) on the nameplate

Standard documentation

- Technical Information: planning guide
  The document contains all the technical data on the device and provides an overview of the accessories and other products that can be ordered for the device
- Brief Operating Instructions: takes you quickly to the 1st measured value
  The Brief Operating Instructions contain all the essential information from incoming acceptance to initial commissioning
- Operating Instructions: reference manual
  The Operating Instructions contain all the information that is required in the various phases of the life cycle of the device: from product identification, incoming acceptance and storage, to mounting, connection, operation and commissioning through to troubleshooting, maintenance and disposal

Supplementary device-dependent documentation

Additional documents are supplied depending on the device version ordered: Always comply strictly with the instructions in the supplementary documentation. The supplementary documentation is an integral part of the device documentation.

Field of Activities

Document FA00004P

Pressure measurement, powerful instruments for process pressure, differential pressure, level and flow

Special Documentation

Document SD01553P

Mechanical accessories for pressure measuring devices

The documentation provides an overview of available manifolds, oval flange adapters, pressure gauge valves, shutoff valves, siphons, condensate pots, cable shortening kits, test adapters, flushing rings, Block&Bleed valves and protective roofs.

Registered trademarks

HART®
Registered trademark of the FieldComm Group, Austin, Texas, USA

Bluetooth®
The Bluetooth® wordmark and logos are registered trademarks of Bluetooth SIG, Inc. and any use of these trademarks by Endress+Hauser is licensed. Other trademarks and trade names are those of their respective owners.

KALREZ®
Registered trademark of DuPont Performance Elastomers L.L.C., Wilmington, USA

71521407

www.addresses.endress.com

Endress+Hauser

People for Process Automation