Level | Pressure | Flow | Temperature | Liquid Analysis | Registration | Systems Components | Services | Solutions

Technical Information

Deltabar S PMD70/75, FMD76/77/78

Differential pressure measurement
Differential pressure transmitter with ceramic and silicon sensors
Overload-resistant and function-monitored; Communication via HART, PROFIBUS PA or FOUNDATION Fieldbus

Application

The Deltabar S differential pressure transmitter is used for the following measuring tasks:

- Flow measurement (volume or mass flow) in conjunction with primary devices in gases, vapors and liquids
- Level, volume or mass measurement in liquids
- Differential pressure monitoring, e.g. of filters and pumps
- International usage thanks to a wide range of approvals

Your benefits

- Very good reproducibility and long-term stability
- High reference accuracy: up to ±0.075 %, as PLATINUM version: ±0.05 %
- Turn down up to 100:1, higher on request
- Used for flow and differential pressure monitoring up to SIL 3, certified to IEC 61508 by TÜV SÜD
- HistoROM®/M-DAT memory module
- Function-monitored from the measuring cell to the electronics
- Continuous modularity for differential pressure, hydrostatics and pressure (Deltabar S, Deltapilot S, Cerabar S), e.g.
  - replaceable display
  - universal electronics
- Quick commissioning with Quick Setup menu
- Menu-guided operation
- Extensive diagnostic functions

TI00382P/00/EN/18.14
No. 71244890

Endress+Hauser
People for Process Automation

Table of contents

Function and system design 4
Device selection 4
Measuring principle 5
Flow measurement 6
Level measurement (level, volume and mass) 7
Communication protocol 7

Input 8
Measured variable 8
Measuring range 8
Explanation of terms 9

Output 10
Output signal 10
Signal range – 4 to 20 mA HART 10
Signal on alarm 10
Load – 4 to 20 mA HART 10
Resolution 10
Dead time, time constant 11
Dynamic behavior: current output 11
Dynamic behavior: digital output (HART electronics) 11
Dynamic behavior: PROFIBUS PA 12
Dynamic behavior: FOUNDATION Fieldbus 13
Damping 13
Protocol-specific data 14

Power supply 18
Electrical connection 18
Supply voltage 21
Current consumption 21
Cable entry 21
Cable specification 21
Residual ripple 21
Influence of power supply 21

Performance characteristics – general 22
Reference operating conditions 22
Influence of the installation position 22
Vibration effects 22

Performance characteristics – metal process isolating diaphragms 23
Reference accuracy – PMD75, FMD77, FMD78 23
Thermal change of the zero output and the output span – PMD75 23
Influence of the operating pressure on zero point and span – PMD75, FMD77, FMD78 24
Total performance – PMD75 24
Long-term stability 25
Total error 25
Warm-up period – PMD75, FMD77, FMD78 25

Performance characteristics – ceramic process isolating diaphragms 26
Reference accuracy – PMD70, FMD76 26
Thermal change of the zero output and the output span – PMD70, FMD76 26
Influence of the operating pressure on zero point and span – PMD70, FMD76 26
Total performance – PMD70, FMD76 26
Long-term stability 26
Total error 27
Warm-up period – PMD70, FMD76 27

Operating conditions (Installation) 28
General installation instructions 28
Measuring arrangement 28
Wall and pipe-mounting 28
"Separate housing" version 30
Turning the housing 31
Oxygen applications 32
Ultrapure gas applications 32
Applications with hydrogen 32

Operating conditions (Environment) 33
Ambient temperature range 33
Storage temperature range 33
Degree of protection 33
Climate class 33
Vibration resistance 33
Electromagnetic compatibility 33
Overvoltage protection (optional) 33

Operating conditions (Process) 34
Process temperature limits (temperature at transmitter) 34
Process temperature range, seals 34
Pressure specifications 35

Mechanical construction 36
Dimensions of T14 housing, optional display on the side 36
Dimensions of T15 housing, optional display on the top 36
Dimensions of T17 housing (hygienic), optional display on the side 36
Process connections PMD70 with ceramic process isolating diaphragms 37
Process connections PMD70 with ceramic process isolating diaphragms (continued) 38
Process connections PMD75 with metal process isolating diaphragms 39
Process connections PMD75 with metal process isolating diaphragms (continued) 40
Process connections PMD75 with metal process isolating diaphragms (continued) 41
Process connection FMD76 with ceramic process isolating diaphragms 42
Process connection FMD76 with ceramic process isolating diaphragms (continued) 43
Process connection FMD76 with ceramic process isolating diaphragms (continued) 44
Process connections FMD77 with diaphragm seal, low-pressure side 44
Process connections FMD77 with diaphragm seal, high-pressure side 45
Process connections FMD77 with diaphragm seal, high-pressure side (continued) 47

Process connections FMD77 with diaphragm seal, high-pressure side (continued) 48
Process connections FMD77 with diaphragm seal, high-pressure side (continued) 49
FMD78 basic device 50
Process connections FMD78 with diaphragm seal 51
Process connections FMD78 with diaphragm seal (continued) . . 52
Process connections FMD78 with diaphragm seal (continued) . . 53
Process connections FMD78 with diaphragm seal (continued) . . 54
Process connections FMD78 with diaphragm seal (continued) . . 55
Process connections FMD78 with diaphragm seal (continued) . . 56
Process connections FMD78 with diaphragm seal (continued) . . 57
Process connections FMD78 with diaphragm seal (continued) . . 58
Wall and pipe mounting with mounting bracket or separate housing 59
Weight 59
Material (not wetted) 60
Material (wetted) 65
Filling oil 65

Human interface 66
Operating elements 66
Operating elements 67
Local operation 68
Remote operation 68
Hardware and software for onsite and remote operation 69

Planning instructions, diaphragm seal systems 71
Applications 71
Design and operation mode 71
Diaphragm seal filling oils 73
Operating temperature range 73
Response time 73
Cleaning instructions 74
Installation instructions 74

Certificates and approvals 77
CE mark 77
Ex approvals 77
Suitability for hygienic processes 77
Marine certificate 77
Functional Safety SIL / IEC 61508 Declaration of Conformity (optional) 77
Overfill prevention 77
CRN approvals 77
Pressure Equipment Directive (PED) 77
Standards and guidelines 77
Classification of process sealing between electrical systems and (flammable or combustible) process fluids in accordance with ANSI/ ISA 12.27.01 79

Ordering information 80
PMD70 80
PMD70 (continued) 81
PMD70 (continued) 82
PMD75 83
PMD75 (continued) 84
PMD75 (continued) 85
PMD75 (continued) 86
FMD76 87
FMD76 (continued) 88
FMD76 (continued) 89
FMD77 90
FMD77 (continued) 91
FMD77 (continued) 92
FMD78 93
FMD78 (continued) 94
FMD78 (continued) 95
FMD78 (continued) 96

Additional documentation 97
Field of Activities 97
Technical Information 97
Operating Instructions 97
Brief Operating Instructions 97
Functional safety manual (SIL) 97
Safety Instructions 97
Installation/Control Drawings 98
Overfill prevention 98

Configuration data sheet 99
Pressure 99
Level 100
Flow 101

Registered trademarks. 102
HART® 102
PROFIBUS® 102
FOUNDATION™ Fieldbus 102

Patents. 102

Function and system design

Device selection

Deltabar S – product family	**PMD70**	**PMD75**	**FMD76**	**FMD77**	**FMD78**
	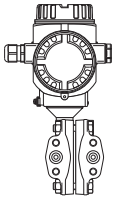 P01-PMD70xxx-16-xx-xx-xx-000 **With ceramic process isolating diaphragms**	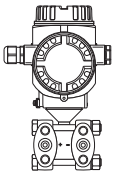 P01-PMD75xxx-16-xx-xx-xx-000 **With metal process isolating diaphragms**	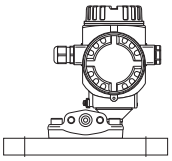 P01-FMD76xxx-16-xx-xx-xx-000 **With ceramic process isolating diaphragms**	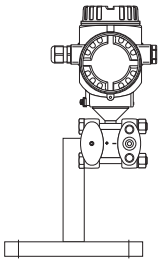 P01-FMD77xxx-16-xx-xx-xx-000 **With metal process isolating diaphragms and diaphragm seal mounted on one side**	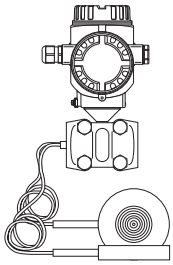 P01-FMD78xxx-16-xx-xx-xx-003 **With metal process isolating diaphragms and capillary diaphragm seals**
Field of application	– Flow – Level – Differential pressure	– Flow – Level – Differential pressure	– Level	– Level	– Level – Differential pressure
Process connections	– 1/4 – 18 NPT – RC 1/4	– 1/4 – 18 NPT – RC 1/4	Low-pressure side (–): – 1/4 – 18 NPT – RC 1/4 High-pressure side (+): – DN 80 – DN 100 – ANSI 3" – 4" – JIS 80A – 100A	Low-pressure side (–): – 1/4 – 18 NPT – RC 1/4 High-pressure side (+): – DN 50 – DN 100 – ANSI 2" – 4" – JIS 80A – 100A	– Wide range of diaphragm seals
Measuring ranges	From –25 to +25 mbar (-0.375 to +0.375 psi) to –3 to +3 bar (-45 to +45 psi)	From –10 to +10 mbar (-0.15 to +0.15 psi) to –40 to +40 bar (-600 to +600 psi)	From –100 to +100 mbar (-1.5 to +1.5 psi) to –3 to +3 bar (-45 to +45 psi)	From –100 to +100 mbar (-1.5 to +1.5 psi) to –16 bar to +16 bar (-240 to +240 psi)	From –100 to +100 mbar (-1.5 to +1.5 psi) to –40 to +40 bar (-600 to +600 psi)
OPL [1]	On one side: up to 100 bar (1500 psi) On both sides: up to 150 bar (2250 psi)	On one side: up to 420 bar (6300 psi) On both sides: up to 630 bar (9450 psi)	On one side: up to 100 bar (1500 psi)	On one side: up to 160 bar (2400 psi) On both sides: up to 240 bar (3600 psi)	On one side: up to 160 bar (2400 psi) On both sides: up to 240 bar (3600 psi)
Process temperature range (temperature at process connection)	–20 to +85°C (–4 to +185°F)	–40 to +85°C (–40 to +185°F)	–20 to +85°C (–4 to +185°F)	Up to +400 °C (752 °F) (depending on the filling oil)	Up to +400 °C (752 °F) (depending on the filling oil)
Ambient temperature range	–20 to +85 °C (-4 to +185 °F)	–40 to +85°C (–40 to +185°F) [2]	–20 to +85°C (-4 to +185 °F)	–40 to +85 °C (-40 to +185 °F) [2]	–40 to +85 °C (-40 to +185 °F)[2]
Ambient temperature range, separate housing	-20 to +60°C (-4 to +122 °F)				
Reference accuracy	– Up to ±0.075 % of the set span – PLATINUM version: up to ±0.05 % of the set span			– Up to ±0.075 % of the set span	
Supply voltage	– Version for non-hazardous areas: – 4...20 mA HART: 10.5 to 45 V DC – PROFIBUS PA and FOUNDATION Fieldbus: 9 to 32 V DC – Ex ia: 10.5 to 30 V DC				
Output	4 to 20 mA with superimposed HART protocol, PROFIBUS PA or FOUNDATION Fieldbus				
Options	– High-pressure version up to p_{stat} 700 bar (10500 psi) – PMD75, FMD77, FMD78: gold-rhodium-coated process isolating diaphragm, NACE-compliant material – Separate housing				

Deltabar S – product family	PMD70	PMD75	FMD76	FMD77	FMD78
Specialties (options)	– Metal-free measurement with PVDF flange – Available with Deltatop as flow compact device	– p_{stat} to 420 bar (6300 psi) – Process isolating diaphragm: tantalum – Available with Deltatop as flow compact device	– Abrasion-resistant and corrosion-resistant – No diaphragm-seal temperature effects – Metal-free measurement possible with ECTFE-coated process connection	– For high media temperatures	– Wide range of diaphragm seals
	– HistoROM®/M-DAT memory module				

1) OPL: over pressure limit; dependent on the lowest-rated element, with regard to pressure, of the selected components

2) Lower temperatures on request

Measuring principle

Ceramic process isolating diaphragm used for PMD70 and FMD76

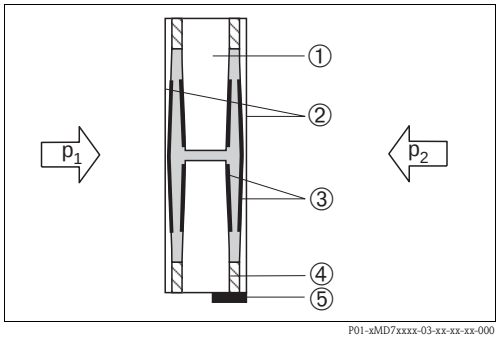

P01-xMD7xxxx-03-xx-xx-xx-000

Metal process isolating diaphragm used for PMD75, FMD77 and FMD78

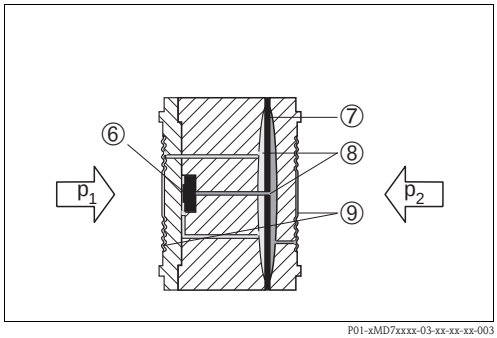

P01-xMD7xxxx-03-xx-xx-xx-003

1 Meter body
2 Process isolating diaphragm
3 Electrodes
4 Glass frit fixes the process isolating diaphragm onto the meter body
5 Temperature sensor
6 Sensing element
7 Middle diaphragm
8 Filling oil
9 Process isolating diaphragm

Ceramic process isolating diaphragm used for PMD70 and FMD76

The ceramic measuring cell is based on the principle of a plate capacitor with an electrode on a meter body (1) and a movable electrode on the interior of the diaphragm (3). Silicone oil or mineral oil are used as the standard filling oils for this measuring cell.
A differential pressure ($p_1 \neq p_2$) causes a corresponding deflection of both diaphragms. Both capacitance values are converted and are fed to the microprocessor of the transmitter as a digital signal.

Advantages:
- Self-monitoring for process isolating diaphragm break or oil loss (constant comparison of the measured temperature with a temperature calculated from the capacitance values)
- Extremely high resistance to aggressive media
- Suitable for vacuums up to 1 $mbar_{abs}$ (0.015 psi)
- Metal-free versions available
- Secondary containment for enhanced integrity

Metal process isolating diaphragm used for PMD75, FMD77 and FMD78

The process isolating diaphragms (3/9) are deflected on both sides by the acting pressures. A filling oil (4/8) transfers the pressure to a resistance bridge (semi-conductor technology). The change in the bridge output voltage, which depends on the differential pressure, is measured and processed further.

Advantages:
- Standard system pressures: 160 bar (2400 psi) and 420 bar (6300 psi)
- High long-term stability
- Very high single-sided overload resistance

Flow measurement

Design and operation mode

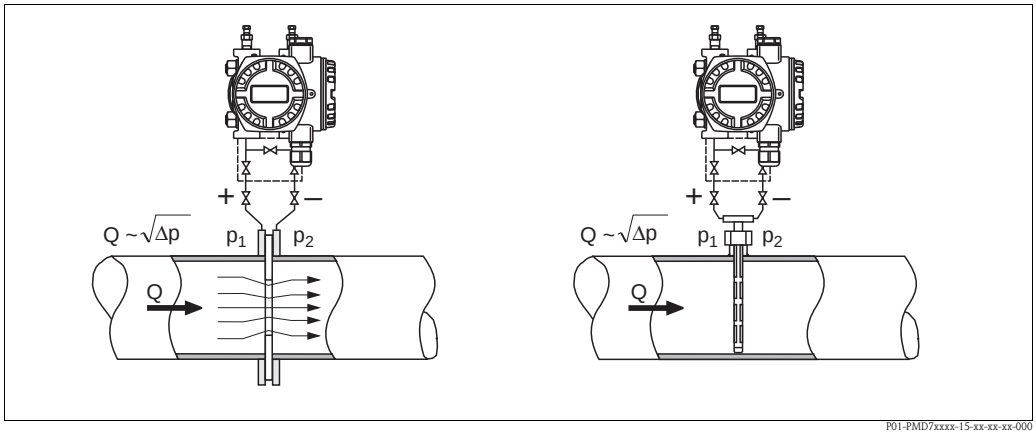

Flow measurement with Deltabar S and primary device, left: orifice plate and right: Pitot tube

Q *Flow*
Δp *Differential pressure,* $\Delta p = p_1 - p_2$

Your benefits

- Choice of four flow modes of operation: volume flow, corrected volume flow (European norm conditions), standard volume flow (American standard conditions) and mass flow.
- Choice of diverse flow units with automatic unit conversion.
- A customized unit can be specified.
- Low flow cut off: when activated, this function suppresses small flows which can lead to large fluctuations in the measured value.
- Contains two totalizers as standard. One totalizer can be reset to zero.
- The totalizing mode and unit can be individually set for each totalizer. This allows independent daily and annual quantity totalizing.
- With the Deltatop product family, Endress+Hauser is offering universal and reliable solutions for flow measurement:
  – Deltatop, the compact, ready-to-use flow measuring unit including the Deltabar S differential pressure transmitter

Note!
For more information about flow measurement with the Deltabar S differential pressure transmitter
- Deltabar S with orifice plate (TI00422P, Deltatop DO6x)
- Deltabar S with Pitot tube (TI00425P, Deltatop DP6x)

Level measurement (level, volume and mass)

Design and operation mode

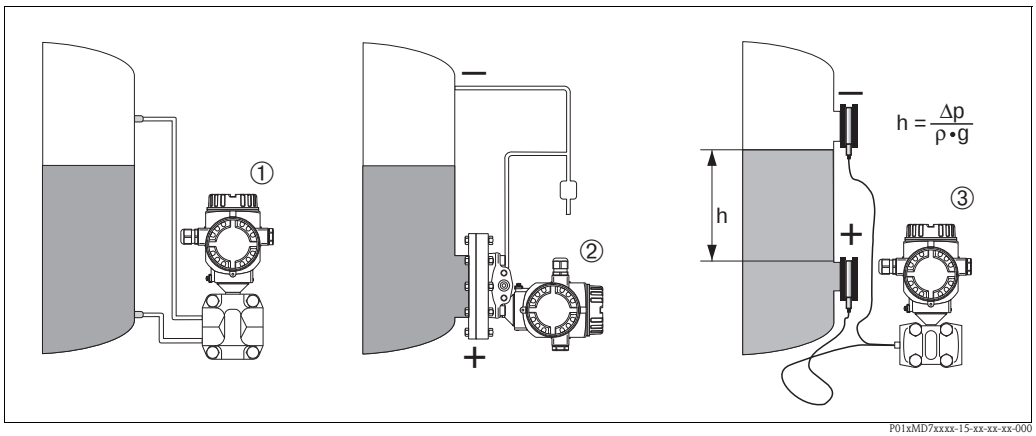

Level measurement with Deltabar S

1 *Level measurement via pressure piping and PMD70*
2 *Level measurement with FMD76*
3 *Level measurement with FMD78*
h *Height (level)*
Δp *Differential pressure*
ρ *Density of the media*
g *Gravitation constant*

Your benefits

- Choice of three level operating modes.
- Volume and mass measurements in any tank shapes by means of a freely programmable characteristic curve.
- Choice of diverse level units with automatic unit conversion.
- A customized unit can be specified.
- Has a wide range of uses, e.g.
  – for level measurement in tanks with pressure overlay
  – in the event of foam formation
  – in tanks with agitators of screen fittings
  – in the event of liquid gases
  – for standard level measurement

Communication protocol

- 4 to 20 mA with HART communication protocol
- PROFIBUS PA
  – The Endress+Hauser devices meet the requirements of the FISCO model.
  – Due to the low current consumption of 13 mA ± 1 mA, the following number of devices can be operated on one bus segment if installing as per FISCO:
    – up to 7 Deltabar S for Ex ia, CSA IS and FM IS applications
    – up to 27 Deltabar S for all other applications, e.g. in non-hazardous areas, Ex nA, etc.

  Further information on PROFIBUS PA can be found in Operating Instructions BA00034S "PROFIBUS DP/PA: Guidelines for planning and commissioning" and in the PNO Guideline.
- FOUNDATION Fieldbus
  – The Endress+Hauser devices meet the requirements of the FISCO model.
  – Due to the low current consumption of 15,5 mA ± 1 mA, the following number of devices can be operated on one bus segment if installing as per FISCO:
    – up to 6 Deltabar S for Ex ia, CSA IS and FM IS applications
    – up to 24 Deltabar S for all other applications, e.g. in non-hazardous areas, Ex nA, etc.

  Further information on FOUNDATION Fieldbus, such as requirements for bus system components can be found in Operating Instructions BA00013S "FOUNDATION Fieldbus Overview".

Input

Measured variable

Differential pressure, from which flow (volume flow or mass flow) and level (level, volume or mass) are derived

Measuring range

PMD75, FMD77, FMD78 (with metal process isolating diaphragms)

Nominal value	Range limit		Smallest calibratable span [5]	MWP [1]	OPL [2]		Min. operating pressure [3]	Versions in the order code [4]	
	lower (LRL)	upper (URL)			on one side	on both sides		PN 160 [6]	PN 420 [6]
[mbar (psi)]	[mbar (psi)]	[mbar (psi)]	[mbar (psi)]	[bar (psi)]	[bar (psi)]	[bar (psi)]	[$mbar_{abs}$ (psi_{abs})]		
10 (0.15) [7]	–10 (-0.15)	+10 (+0.15)	0.25 (0.00375)	160 (2400)	160 (2400)	240 (3600)	0.1 (0.0015)	7B / 2B	–
30 (0.45) [7]	–30 (-0.45)	+30 (+0.45)	0.3 (0.0045)					7C / 2C	–
100 (1.5)	–100 (-1.5)	+100 (+1.5)	1/5 (0.015/0.075) [8]	160 (2400) / 420 (6300) [9]	160 (2400) / 420 (6300)	240/630 (3600/9450)		7D / 2D	3D / 8D
500 (7.5)	–500 (-7.5)	+500 (+7.5)	5 (0.075)					7F / 2F	8F / 3F
3000 (45)	–3000 (-45)	+3000 (+45)	30 (0.45)					7H / 2H	8H / 3H
16000 (240)	–16000 (-240)	+16000 (+240)	160 (2.4)					7L / 2L	8L / 3L
40000 (600)	–40000 (-600)	+40000 (+600)	400 (6)		"+" side [10]: 160 (2400) / 420 (6300) [11]			7M	8M / 3M

PMD70, FMD76 (with ceramic process isolating diaphragms)

Nominal value	Range limit		Smallest calibratable span [5]	MWP [1]	OPL [2]		Min. operating pressure [3]	Versions in the order code [4]
	lower (LRL)	upper (URL)			on one side	on both sides		
[mbar (psi)]	[mbar (psi)]	[mbar (psi)]	[mbar (psi)]	[bar (psi)]	[bar (psi)]	[bar (psi)]	[$mbar_{abs}$ (psi_{abs})]	
25 (0.375)	–25 (-0.375)	+25 (+0.375)	0.25 (0.00375)	10 (150)	10 (150)	15 (225)	1 (0.015)	7B
100 (1.5)	–100 (-1.5)	+100 (+1.5)	1 (0.015)	16 (240)	16 (240)	24 (360)		7D
500 (7.5)	–500 (-7.5)	+500 (+7.5)	5 (0.075)	100 (1500)	100 (1500)	150 (2250)		7F
3000 (45)	–3000 (-45)	+3000 (+45)	30 (0.45)	100 (1500)	100 (1500)	150 (2250)		7H

1) The MWP (maximum working pressure; MWP = PN) for the measuring device depends on the lowest-rated element, with regard to pressure, of the selected components, i.e. the process connection (→ 36 ff) has to be taken into consideration in addition to the measuring cell (→ see Table above). Also observe pressure-temperature dependency. For the appropriate standards and further information, see → 35, "Pressure specifications" section.
2) OPL: over pressure limit depends on the lowest-rated element, with regard to pressure, of the selected components → 35, "Pressure specifications" section.
3) The minimum operating pressure indicated in the table applies to silicone oil under reference operating conditions. Min. operating pressure at 85 °C (185 °F) for silicone oil: up to 10 $mbar_{abs}$ (0.15 psi_{abs}).
FMD77 and FMD78: Min. operating pressure: 50 $mbar_{abs}$ (0.75 psiabs); observe also the pressure and temperature application limits of the selected filling oil on → 73. For vacuum applications, please observe the installation instructions on → 74 ff.
4) Version in the order code → 80 ff, feature 40 "Nominal range; PN"
5) Turn down > 100:1 on request
6) Screws → 60 ff.
7) PMD75 only
8) Minimum span that can be calibrated for PMD75: 1 mbar (0,015 psi); minimum span that can be calibrated for FMD77 and FMD78: 5 mbar (0.075 psi)
9) For PMD75 devices with CRN-approved process connections, the MWP is
- with the use of O rings: 315 bar (4725 psi)
- with the use of PTFE and CU seals: 120 bar (1800 psi)

10) "–" side: 100 bar (1500 psi)
11) 420 bar (6300 psi) only PMD75

Explanation of terms

Explanation of the terms "turn down (TD)", "set span" and "zero-based span"

Case 1:
- |Lower range value (LRV)| ≤ |Upper range value (URV)|

Example:
- Lower range value (LRV) = 0 mbar
- Upper range value (URV) = 100 mbar (1.5 psi)
- Nominal value (URL) = 500 mbar (7.5 psi)

Turn down:
- TD = URL / |URV| = 5:1

Set span:
- URV – LRV = 100 mbar (1.5 psi)
  This span is based on the zero point.

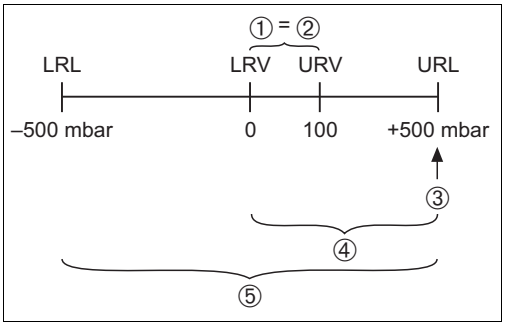

P01-xxxxxxxx-05-xx-xx-xx-001

Example: 500 mbar (7.5 psi) measuring cell

Case 2:
- |Lower range value (LRV)| ≥ |Upper range value (URV)|

Example:
- Lower range value (LRV) = –300 mbar (4.5 psi)
- Upper range value (URV) = 0 bar
- Nominal value (URL) = 500 mbar (7.5 psi)

Turn down:
- TD = URL / |(LRV)| = 1.67:1

Set span:
- URV – LRV = 300 mbar (4.5 psi)
  This span is based on the zero point.

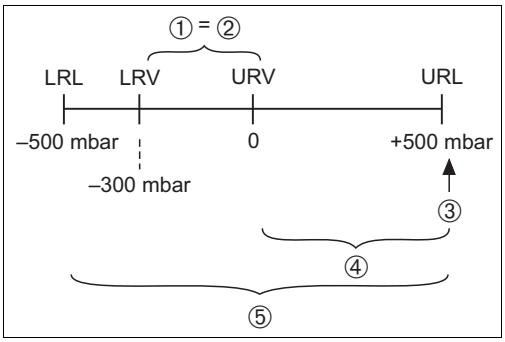

P01-xMD7xxxx-05-xx-xx-xx-007

Example: 500 mbar (7.5 psi) measuring cell

1	*Set span*
2	*Zero-based span*
3	*Nominal value ≙ upper range limit (URL)*
4	*Nominal measuring range*
5	*Sensor measuring range*
LRL	*Lower range limit*
URL	*Upper range limit*
LRV	*Lower range value*
URV	*Upper range value*

Output

Output signal

- 4 to 20 mA with superimposed digital communication protocol HART 5.0, 2-wire
- Digital communication signal PROFIBUS PA (Profile 3.0)
  - signal coding: Manchester Bus Powered (MBP): Manchester II
  - data transmission rate: 31.25 KBit/s voltage mode
- Digital communication signal FOUNDATION Fieldbus
  - signal coding: Manchester Bus Powered (MBP): Manchester II
  - data transmission rate: 31.25 KBit/s voltage mode

Signal range – 4 to 20 mA HART

3.8 mA to 20.5 mA

Signal on alarm

As per NAMUR NE 43

- 4 to 20 mA HART
  Options:
  - Max. alarm: can be set from 21 to 23 mA (Factory setting: 22 mA)
  - Hold measured value: last measured value is held
  - Min. alarm: 3.6 mA
- PROFIBUS PA: can be set in the Analog Input block,
  Options: Last Valid Out Value (factory setting), Fail Safe Value, Status Bad
- FOUNDATION Fieldbus: can be set in the Analog Input block,
  Options: Last Good Value, Fail Safe Value (factory setting), Wrong Value

Load – 4 to 20 mA HART

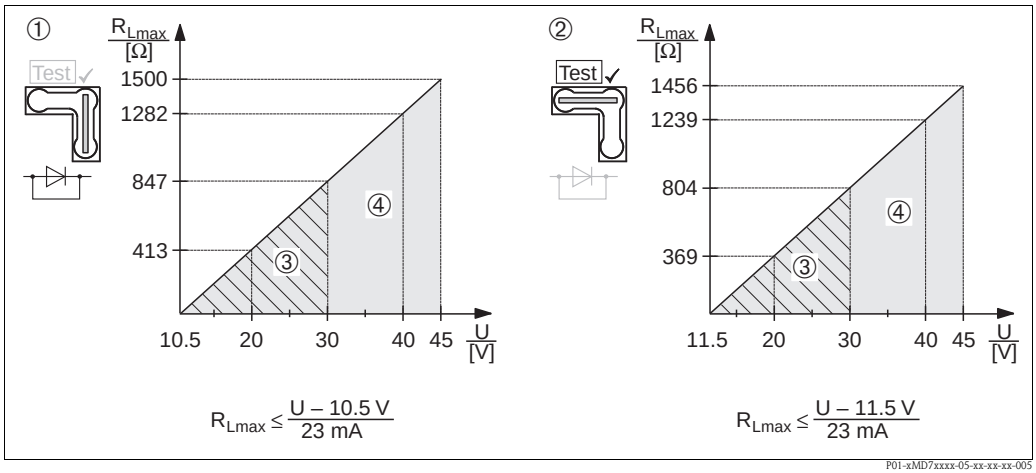

P01-xMD7xxxx-05-xx-xx-xx-005

Load diagram, observe the position of the jumper and the explosion protection (→ 20, "Measuring a 4 to 20 mA test signal" section.)

1 Jumper for 4 to 20 mA test signal set to "Non-test" position
2 Jumper for 4 to 20 mA test signal set to "Test" position
3 Power supply 10.5 (11.5) to 30 V DC for 1/2 G Ex ia, 1 GD Ex ia, 1/2 GD Ex ia, FM IS, CSA IS, IECEx ia, NEPSI Ex ia
4 Power supply 10.5 (11.5) to 45 V DC for device for non-hazardous areas, 1/2 D, 1/3 D, 2 G Ex d, 3 G Ex nA, FM XP, FM DIP, FM NI, CSA XP, CSA dust ignition proof, NEPSI Ex d
R_{Lmax} Maximum load resistance
U Supply voltage

Note!
When operating via a handheld terminal or via a PC with an operating program, a minimum communication resistance of 250 Ω must exist within the loop.

Resolution

- Current output: 1 µA
- Display: can be set (factory setting: presentation of the maximum accuracy of the transmitter)

Dead time, time constant

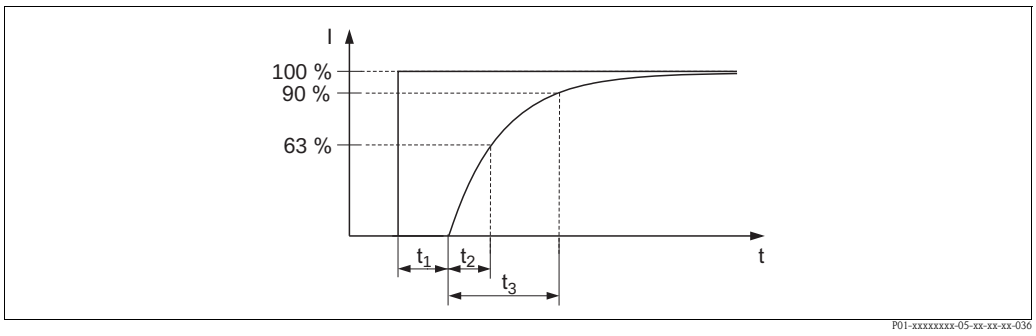

Presentation of the dead time and the time constant

Dynamic behavior: current output

Type		Measuring cell	Dead time (t_1) [ms]	Time constant T63 (t_2) [ms]	Time constant T90 (t_3) [ms]
PMD75	max.	■ 10 mbar (0.15 psi) and 30 mbar (0.45 psi) ■ 100 mbar (1.5 psi) ■ 500 mbar (7.5 psi) ■ 3 bar (45 psi) ■ 16 bar (240 psi)	45	■ 450 ■ 60 ■ 45 ■ 40 ■ 60	■ 1040 ■ 138 ■ 104 ■ 92 ■ 138
PMD70, FMD76	max.	■ 25 mbar (0.375 psi) ■ 100 mbar (1.5 psi) ■ 500 mbar (7.5 psi) ■ 3 bar (45 psi)	90	■ 4700 ■ 280 ■ 210 ■ 110	■ 10810 ■ 644 ■ 483 ■ 253
FMD77, FMD78	max.	Dependent on the diaphragm seal			

Dynamic behavior: digital output (HART electronics)

A typical burst rate of 300 ms results in the following behavior:

Type		Measuring cell	Dead time (t_1) [ms]	Dead time (t_1) + Time constant T63 (=t_2) [ms]	Dead time (t_1) + Time constant T90 (=t_3) [ms]
PMD75	min.	■ 10 mbar (0.15 psi) and 30 mbar (0.45 psi) ■ 100 mbar (1.5 psi) ■ 500 mbar (7.5 psi) ■ 3 bar (45 psi) ■ 16 bar (240 psi)	205	■ 655 ■ 265 ■ 250 ■ 245 ■ 265	■ 1200 ■ 298 ■ 264 ■ 252 ■ 298
	max.	■ 10 mbar (0.15 psi) and 30 mbar (0.45 psi) ■ 100 mbar (1.5 psi) ■ 500 mbar (7.5 psi) ■ 3 bar (45 psi) ■ 16 bar (240 psi)	1005	■ 1455 ■ 1065 ■ 1050 ■ 1045 ■ 1065	■ 2000 ■ 1098 ■ 1064 ■ 1052 ■ 1098
PMD70, FMD76	min.	■ 25 mbar (0.375 psi) ■ 100 mbar (1.5 psi) ■ 500 mbar (7.5 psi) ■ 3 bar (45 psi)	250	■ 4950 ■ 530 ■ 460 ■ 360	■ 10970 ■ 804 ■ 643 ■ 413
PMD70, FMD76	max.	■ 25 mbar (0.375 psi) ■ 100 mbar (1.5 psi) ■ 500 mbar (7.5 psi) ■ 3 bar (45 psi)	1050	■ 5750 ■ 1330 ■ 1260 ■ 1160	■ 11770 ■ 1604 ■ 1443 ■ 1213
FMD77, FMD78	max.	Dependent on the diaphragm seal			

Reading cycle

■ Acyclic: max. 3/s, typical 1/s (depends on command # and number of preambles)

- Cyclic (Burst): max. 3/s, typical 2/s

The Device commands the BURST MODE function for cyclic value transmission via the HART communication protocol.

Cycle time (Update time)

Cyclic (Burst): min. 300 ms

Response time

- Acyclic: min. 330 ms, typical 590 ms (depends on command # and number of preambles)
- Cyclic (Burst): min. 160 ms, typical 350 ms (depends on command # and number of preambles)

Dynamic behavior: PROFIBUS PA

A typical PLC cycle time of 1 s results in the following behavior:

Type		Measuring cell	Dead time (t_1) [ms]	Dead time (t_1) + Time constant T63 (=t_2) [ms]	Dead time (t_1) + Time constant T90 (=t_3) [ms]
PMD75	min.	■ 10 mbar (0.15 psi) and 30 mbar (0.45 psi) ■ 100 mbar (1.5 psi) ■ 500 mbar (7.5 psi) ■ 3 bar (45 psi) ■ 16 bar (240 psi)	80	■ 530 ■ 140 ■ 125 ■ 120 ■ 140	■ 1075 ■ 173 ■ 139 ■ 127 ■ 173
	max.	■ 10 mbar (0.15 psi) and 30 mbar (0.45 psi) ■ 100 mbar (1.5 psi) ■ 500 mbar (7.5 psi) ■ 3 bar (45 psi) ■ 16 bar (240 psi)	1280	■ 1730 ■ 1340 ■ 1325 ■ 1320 ■ 1340	■ 2275 ■ 1373 ■ 1339 ■ 1327 ■ 1373
PMD70, FMD76	min.	■ 25 mbar (0.375 psi) ■ 100 mbar (1.5 psi) ■ 500 mbar (7.5 psi) ■ 3 bar (45 psi)	125	■ 4825 ■ 405 ■ 335 ■ 235	■ 10845 ■ 679 ■ 518 ■ 288
PMD70, FMD76	max.	■ 25 mbar (0.375 psi) ■ 100 mbar (1.5 psi) ■ 500 mbar (7.5 psi) ■ 3 bar (45 psi)	1325	■ 6025 ■ 1605 ■ 1535 ■ 1435	■ 12045 ■ 1879 ■ 1718 ■ 1488
FMD77, FMD78	max.	Dependent on the diaphragm seal			

Reading cycle (PLC)

- Cyclic: max. 30/s (dependent on the number and type of function blocks used in a closed-control loop)
- Acyclic: typical 25/s

Cycle time (update time)

min. 200 ms
The cycle time in a bus segment in cyclic data communication depends on the number of devices, on the segment coupler used and on the internal PLC cycle time. A new value can be determined up to 5 times per second.

Response time

- Cyclic: approx. 10 to 13 ms (depends on Min. Slave Interval)
- Acyclic: approx. 60 to 70 ms (depends on Min. Slave Interval)

Dynamic behavior: FOUNDATION Fieldbus

A typical configuration for the macro cycle time (host system) of 1 s results in the following behavior:

Type		Measuring cell	Dead time (t_1) [ms]	Dead time (t_1) + Time constant T63 (=t_2) [ms]	Dead time (t_1) + Time constant T90 (=t_3) [ms]
PMD75	min.	■ 10 mbar (0.15 psi) and 30 mbar (0.45 psi) ■ 100 mbar (1.5 psi) ■ 500 mbar (7.5 psi) ■ 3 bar (45 psi) ■ 16 bar (240 psi)	90	■ 540 ■ 150 ■ 135 ■ 130 ■ 150	■ 1085 ■ 183 ■ 149 ■ 137 ■ 183
	max.	■ 10 mbar (0.15 psi) and 30 mbar (0.45 psi) ■ 100 mbar (1.5 psi) ■ 500 mbar (7.5 psi) ■ 3 bar (45 psi) ■ 16 bar (240 psi)	1090	■ 1540 ■ 1150 ■ 1135 ■ 1130 ■ 1150	■ 2085 ■ 1183 ■ 1149 ■ 1137 ■ 1183
PMD70, FMD76	min.	■ 25 mbar (0.375 psi) ■ 100 mbar (1.5 psi) ■ 500 mbar (7.5 psi) ■ 3 bar (45 psi)	135	■ 4835 ■ 415 ■ 345 ■ 245	■ 10855 ■ 689 ■ 528 ■ 298
PMD70, FMD76	max.	■ 25 mbar (0.375 psi) ■ 100 mbar (1.5 psi) ■ 500 mbar (7.5 psi) ■ 3 bar (45 psi)	1135	■ 5835 ■ 1415 ■ 1345 ■ 1245	■ 11855 ■ 1689 ■ 1528 ■ 1298
FMD77, FMD78	max.	Dependent on the diaphragm seal			

Reading cycle

- Cyclic: max. 10/s (dependent on the number and type of function blocks used in a closed-control loop)
- Acyclic: typical 10/s

Cycle time (update time)

Cyclic: min. 100 ms

Response time

- Cyclic: max. 20 ms (for standard bus parameter settings)
- Acyclic: typical 100 ms (for standard bus parameter settings)

Damping

A damping affects all outputs (output signal, display).

- Via onsite display, handheld terminal or PC with operating program, continuous from 0 to 999 s
- Additionally for HART and PROFIBUS PA: via DIP switch on the electronic insert, switch position "on" = set value and "off"
- Factory setting: 2 s

Protocol-specific data

HART

Manufacturer ID	17 (11 hex)
Device Type Code	23 (17 hex)
Device Revision	21 (15 hex) - SW version 02.1y.zz
HART spezification	5
DD Revision	■ 4 (russian in language selection) ■ 3 (netherlands in language selection)
Device description files (DTM, DD)	Information and files can be found: ■ www.endress.com ■ www.hartcomm.org
HART load	Min. 250 Ω
HART device variables	The measured values can be freely assigned to the device variables: **Measured values for PV (primary variable)** ■ Pressure ■ Flow ■ Level ■ Tank content **Measured values for SV, TV (second and third variable)** ■ Pressure ■ Totalizer **Measured values for QV (fourth variable)** ■ Temperature
Supported functions	■ Burst mode ■ Additional Transmitter Status ■ Device Locking ■ Alternative operating modes

PROFIBUS PA

Manufacturer ID	17 (11 hex)
Ident number	1542 hex
Profile Version	3.0 ■ SW Version 03.00.zz ■ SW Version 04.00.zz 3.02 ■ SW Version 04.01.zz (Device Revision 3) Compartibility SW version 03.00.zz and higher.
GSD Revision	■ 4 (SW Version 3.00.zz and 4.00.zz) ■ 5 (Device Revision 3)
DD Revision	■ 1 (SW Version 3.00.zz and 4.00.zz) ■ 1 (Device Revision 3)
GSD File	Information and files can be found: ■ www.endress.com ■ www.profibus.org
DD Files	
Output values	**Measured values for PV (über Analog Input Function Block)** ■ Pressure ■ Flow ■ Level ■ Tank content **Measured values for SV** ■ Pressure ■ Temperature **Measured values for QV** ■ Totalizer
Input values	Input value sent from PLC, can be shown on display

Supported features	■ Identification & Maintenance Simple device identification via control system and nameplate ■ Condensed status[1)] ■ Automatic ident number adaptation and switchable to following ident numbers[1)]: – 9700: Profile-specific transmitter identification number with the "Classic" or "Condensed" status". – 1504: Compatibility mode for the old Deltabar S generation (FMD230, FMD630, FMD633, PMD230, PMD235). – 1542: Identification number for the new Deltabar S generation (FMD76, FMD77, FMD78, PMD70, PMD75). ■ Device locking: The device can be locked by hardware or software.

1) Only with Profile Version 3.02

FOUNDATION Fieldbus

Manufacturer ID	452B48 hex
Device type	1009 hex
Device Revision	■ 6 - SW Version 03.00.zz ■ 7 - SW Version 04.00.zz (FF-912)
DD Revision	■ 3 (Device Revision 6) ■ 2 (Device Revision 7)
CFF Revision	■ 4 (Device Revision 6) ■ 1 (Device Revision 7)
DD Files	Information and files can be found: ■ www.endress.com ■ www.fieldbus.org
CFF Files	
Device Tester Version (ITK Version)	■ 5.0 (Device Revision 6) ■ 6.01 (Device Revision 7)
ITK Test Campaign Number	■ IT054700 (Device Revision 6) ■ IT085400 (Device Revision 7)
Link Master (LAS) capable	yes
Link Master / Basic Device selectable	Yes, default is Basic Device
Node Address	Default: 247 (F7 hex)
Supported features	Field Diagnostics Profile [1)] Following methods are supported: ■ Restart ■ Configure error as warning or alarm ■ HistoROM ■ Peakhold ■ AlarmInfo ■ SensorTrimm
Number of VCRs	■ 44 (Device Revision 6) ■ 24 (Device Revision 7)
Number of Link Objects in VFD	50

1) Only with FF912

Virtual communication references (VCRs)

	Device Revision 6	**Device Revision 7**
Permanent Entries	44	1
Client VCRs	0	0
Server VCRs	5	10
Source VCRs	8	43
Sink VCRs	0	0
Subscriber VCRs	12	43
Publisher VCRs	19	43

Link settings

	Device Revision 6	**Device Revision 7**
Slot time	4	4
Min. inter PDU delay	12	10
Max. response delay	10	10

Transducer Blocks

Block	**Content**	**Output values**
TRD1 Block	Contains all parameters related to the measurement	▪ Pressure, flow or level (channel 1) ▪ Process temperature (channel 2)
Service Block	Contains service information	▪ Pressure after damping (channel 3) ▪ Pressure peakhold indicator (channel 4) ▪ Counter for max. pressure transgressions (channel 5)
Dp Flow Block	Contains flow and totalizer parameter	Totalizer 1 (channel 6)
Diagnostic Block	Contains diagnostic information	Error code via DI channels (channel 0 to 16)
Display Block	Contains parameters to configure the onsite display	No output values

Function blocks

Block	Content	Number of blocks	Execution time		Functionality	
			Device Revision 6	Device Revision 7	Device Revision 6	Device Revision 7
Resource Block	The Resource Block contains all the data that uniquely identify the device. It is an electronic version of a nameplate of the device.	1			enhanced	
Analog Input Block 1 Analog Input Block 2 Analog Input Block 3	The AI Block receives the measuring data from the Sensor Block, (selectable via a channel number) and makes the data available to other function blocks at its output. Enhancement: digital outputs for process alarms, fail safe mode.	3	45 ms	45 ms [1)]	enhanced	
Digital Input Block	This block contains the discrete data of the Diagnose Block (selectable via a channel number 0 to 16) and provides them for other blocks at the output.	1	40 ms	30 ms	standard	enhanced
Digital Output Block	This block converts the discrete input and thus initiates an action (selectable via a channel number) in the DP Flow Block or in the Service Block. Channel 1 resets the counter for max. pressure transgressions..	1	60 ms	40 ms	standard	enhanced
PID Block	The PID Block serves as a proportional-integral-derivative controller and is used almost universally for closed-loop-control in the field including cascade and feedforward. Input IN can be indicated on the display. The selection is performed in the Display Block (DISPLAY_MAIN_LINE_CONTENT).	1	120 ms	70 ms	standard	enhanced
Arithmetic Block	This block is designed to permit simple use of popular measurement math functions. The user does not have to know how to write equations. The math algorithm is selected by name, chosen by the user for the function to be performed.	1	50 ms	40 ms	standard	enhanced
Input Selector Block	The Input Selector Block facilitates the selection of up to four inputs and generates an output based on the configured action. This block normally receives its inputs from AI Blocks. The block performs maximum, minimum, average and 'first good' signal selection. Inputs IN1 to IN4 can be indicated on the display. The selection is performed in the Display Block (DISPLAY_MAIN_LINE_CONTENT).	1	35 ms	35 ms	standard	enhanced
Signal Characterizer Block	The Signal Characterizer Block has two sections, each with an output that is a non-linear function of the respective input. The non-linear function is generated by a single look-up table with 21 arbitrary x-y pairs.	1	30 ms	40 ms	standard	enhanced
Integrator Block	The Integrator Block integrates a variable as a function of the time or accumulates the counts from a Pulse Input Block. The block may be used as a totalizer that counts up until reset or as a batch totalizer that has a setpoint, where the integrated or accumulated value is compared to pre-trip and trip settings, generating a binary signal when the setpoint is reached.	1	35 ms	40 ms	standard	enhanced
Analog Alarm Block	This block contains all process alarm conditions (working like a comparator) and represents them at the output.	1	35 ms	35 ms	standard	enhanced

Additional function block information:

Instantiate Function Block	YES	YES
Number of additional instantiate blocks	9	4

1) Without trend and alarm reports

Power supply

Electrical connection

Note!
- When using the measuring device in hazardous areas, installation must comply with the corresponding national standards and regulations and the Safety Instructions or Installation or Control Drawings. → 📄 97, "Safety Instructions" and "Installation/Control Drawings" sections.
- Devices with integrated overvoltage protection must be grounded. → 📄 33.
- Protective circuits against reverse polarity, HF influences and overvoltage peaks are installed.

4 to 20 mA HART

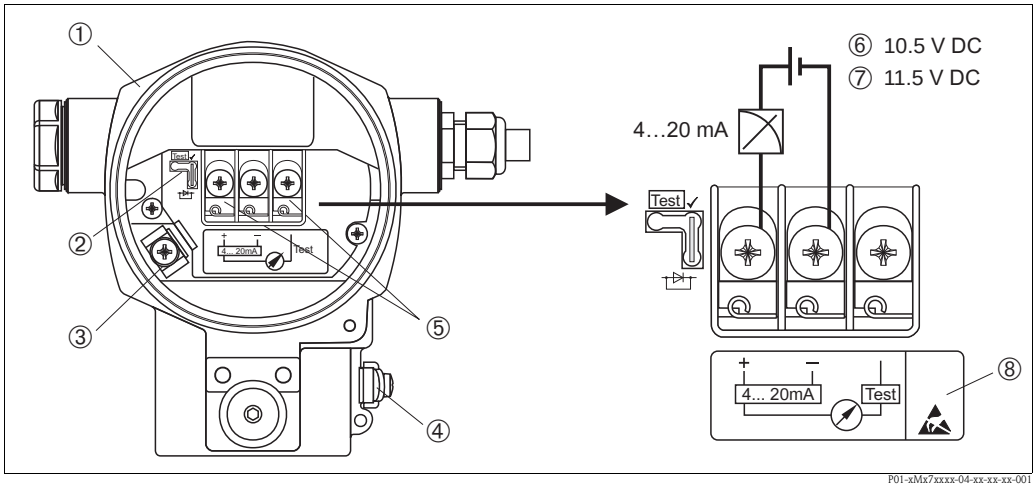

Electrical connection 4 to 20 mA HART

1 Housing
2 Jumper for 4 to 20 mA test signal. See → 📄 20, "Measuring a 4 to 20 mA test signal" section.
3 Internal ground terminal
4 External ground terminal
5 4 to 20 mA test signal between positive and test terminal
6 Minimum supply voltage = 10.5 V DC, jumper is set as illustrated in the diagram.
7 Minimum supply voltage = 11.5 V DC, jumper is inserted in "Test" position.
8 Devices with integrated overvoltage protection are labeled OVP (overvoltage protection) here (→ 📄 33).

PROFIBUS PA

The digital communication signal is transmitted to the bus via a 2-wire connection. The bus also provides the power supply. For further information on the network structure and grounding, and for further bus system components such as bus cables, see the relevant documentation, e.g. Operating Instructions BA00034S "PROFIBUS DP/PA: Guidelines for planning and commissioning" and the PNO Guideline.

Cable specifications:
- Use a twisted, shielded two-wire cable, preferably cable type A

Note!
For further information on the cable specifications, see Operating Instructions BA00034S "PROFIBUS DP/PA: Guidelines for planning and commissioning", the PNO Guideline 2.092 PROFIBUS PA User and Installation Guideline" and IEC 61158-2 (MBP).

FOUNDATION Fieldbus

The digital communication signal is transmitted to the bus via a 2-wire connection. The bus also provides the power supply. For further information on the network structure and grounding and for further bus system components such as bus cables, see the relevant documentation, e.g. Operating Instructions BA00013S "FOUNDATION Fieldbus Overview" and the FOUNDATION Fieldbus Guideline.

Cable specifications:
- Use a twisted, shielded two-wire cable, preferably cable type A

Note!
For further information on the cable specifications, see Operating Instructions BA00013S "FOUNDATION Fieldbus Overview", FOUNDATION Fieldbus Guideline and IEC 61158-2 (MBP).

Devices with Harting plug Han7D

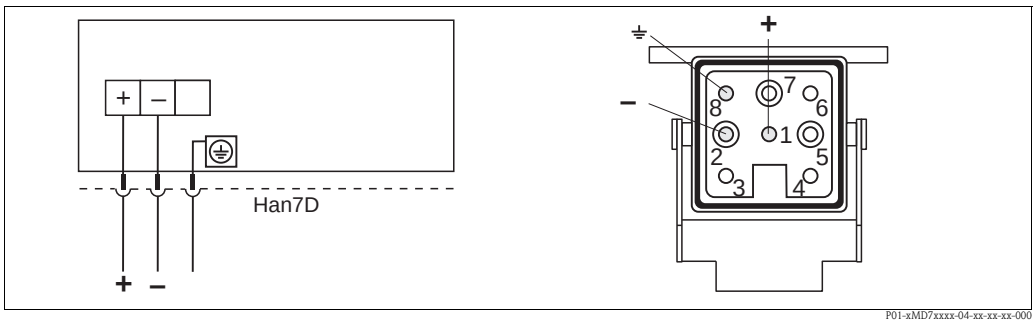

Left: electrical connection for devices with Harting plug Han7D
Right: view of the plug connector at the device

Material: CuZn, gold-plated plug-in jack and plug

Devices with M12 plug

PIN assignment for M12 connector

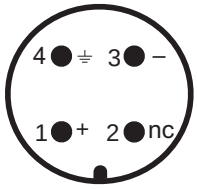

PIN	Meaning
1	Signal +
2	Not assigned
3	Signal –
4	Earth

Endress+Hauser offers the following accessories for devices with an M12 plug:
Plug-in jack M 12x1, straight
- Material: body PA; coupling nut CuZn, nickel-plated
- Degree of protection (fully locked): IP67
- Order number: 52006263

Plug-in jack M 12x1, elbowed
- Material: body PBT/PA; coupling nut GD-Zn, nickel-plated
- Degree of protection (fully locked): IP67
- Order number: 71114212

Cable 4x0.34 mm² (20 AWG) with M12 socket, elbowed, screw plug, length 5 m (16 ft)
- Material: body PUR; coupling nut CuSn/Ni; cable PVC
- Degree of protection (fully locked): IP67
- Order number: 52010285

Devices with 7/8" plug

PIN assignment for 7/8" connector

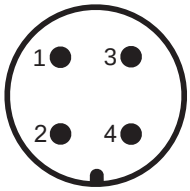

PIN	Meaning
1	Signal –
2	Signal +
3	Not assigned
4	Shield

External thread: 7/8 – 16 UNC
- Material: 316L (1.4401)
- Degree of protection: IP68

Cable gland

Approval	Type	Clamping area
Standard, II1/2G Exia, IS	Plastic M20x1.5	5 to 10 mm (0.2 to 0.39 in)
ATEX II1/2D, II1/3D, II1/2GD Exia, II1GD Exia II3G Ex nA	Metal M20x1.5 (Ex e)	7 to 10.5 mm (0.28 to 0.41 in)

Terminals

For wire cross-sections of 0.5 to 2.5 mm² (20 to 14 AWG)

Measuring a 4 to 20 mA test signal

A 4 to 20 mA test signal may be measured via the positive and test terminal without interrupting the measurement. The minimum supply voltage of the device can be reduced by simply changing the position of the jumper. As a result, operation is also possible with lower voltage sources. Observe the position of the jumper in accordance with the following table.

Jumper position for test signal	Description
	– Measuring 4 to 20 mA test signal via the plus and test terminal: possible. (Thus, the output current can be measured without interruption via the diode.) – Delivery status – Minimum supply voltage: 11.5 V DC
	– Measuring 4 to 20 mA test signal via the plus and test terminal: not possible. – Minimum supply voltage: 10.5 V DC

Supply voltage	Note! ■ When using the measuring device in hazardous areas, installation must comply with the corresponding national standards and regulations and the Safety Instructions or Installation or Control Drawings. ■ All explosion protection data are given in separate documentation which is available upon request. The Ex documentation is supplied as standard with all devices approved for use in explosion hazardous areas. → 🗎 97, "Safety Instructions" and "Installation/Control Drawings" sections. **4 to 20 mA HART** ■ Version for non-hazardous areas, jumper for 4 to 20 mA test signal in "Test" position (delivery status): 11.5 to 45 V DC ■ Version for non-hazardous areas, jumper for 4 to 20 mA test signal in "Non-test" position: 10.5 to 45 V DC **PROFIBUS PA** ■ Version for non-hazardous areas: 9 to 32 VDC **FOUNDATION Fieldbus** ■ Version for non-hazardous areas: 9 to 32 V DC
Current consumption	■ PROFIBUS PA: 13 mA ± 1 mA, switch-on current corresponds to IEC 61158-2, Clause 21 ■ FOUNDATION Fieldbus: 15,5 mA ± 1 mA, switch-on current corresponds to IEC 61158-2, Clause 21
Cable entry	→ 🗎 80 ff, feature 30 "Housing; Cable entry; Protection".
Cable specification	■ Endress+Hauser recommends using shielded, twisted-pair two-wire cables. ■ Terminals for core cross-sections 0.5 to 2.5 mm^2 (20 to 14 AWG) ■ Cable outer diameter: 5 to 9 mm (0.2 to 0.35 in) depends on the used cable gland (→ 🗎 20)
Residual ripple	Without influence on 4 to 20 mA signal up to ± 5 % residual ripple within the permitted voltage range [according to HART hardware specification HCF_SPEC-54 (DIN IEC 60381-1)]
Influence of power supply	≤ 0.0006% of URL/1 V

Performance characteristics – general

Reference operating conditions

- As per IEC 60770
- Ambient temperature T_A = constant, in the range of: +21 to +33 °C (+70 to 91 °F)
- Humidity φ = constant, in the range of: 5 to 80 % rH
- Ambient pressure p_A = constant, in the range of: 860 to 1060 mbar (12.47 to 15.37 psi)
- Position of the measuring cell = constant, in range: horizontally ±1°
- Input of LOW SENSOR TRIM and HIGH SENSOR TRIM for lower range value and upper range value
- Zero based span
- Process isolating diaphragm material:
  – PMD75: AISI 316L/1.4435, Alloy C276, gold-rhodium-coated, Monel
  – FMD77, FMD78: AISI 316L/1.4435
  – PMD70, FMD76: Al_2O_3 (aluminum oxide ceramic)
- Filling oil: silicone oil
- Side flange material PMD75: AISI 316L/1.4435
- Supply voltage: 24 V DC ± 3 V DC
- Load with HART: 250 Ω

Influence of the installation position

- PMD70, FMD76: ≤ 3 mbar (0.045 psi) [1, 3]
- PMD75: ≤ 4 mbar (0.06 psi) [1, 3]
- FMD77: ≤ 32 mbar (0.48 psi) [2, 3]

1) Device is rotated vertically to the axis of the process isolating diaphragm.
2) Device rotated vertically to the process isolating diaphragm of the flange.
3) The value is doubled for devices with inert oil.

Note!
Position-dependent zero shift can be corrected. → 28, "General installation instructions" section and → 74 ff, "Installation instructions, diaphragm seal systems" section

Vibration effects

Device	Messzelle	Housing	Test standard	Vibration effects
PMD70/ FMD76	alle	Optional onsite display on the side (T14)	GL	≤ reference accuracy to 10 to 18 Hz: ±4 mm (0.16 in); 18 to 500 Hz: 5 g
PMD75	10 mbar (0,15 psi) 30 mbar (0,45 psi)	Optional onsite display on the side (T14)	IEC 61298-3	≤ reference accuracy to 10 to 38 Hz: ±0.35 mm (0.01 in); 38 to 2000 Hz: 2 g
		Optional onsite display on the top (T15)		≤ reference accuracy to 10 to 60 Hz: ±0.35 mm (0.01 in); 60 to 2000 Hz: 5 g
PMD75	▪ 100 mbar (1,5 psi) ▪ 500 mbar (7,5 psi) ▪ 3 bar (45 psi) ▪ 16 bar (240 psi) ▪ 40 bar (600 psi)	Optional onsite display on the side (T14)	IEC 61298-3	≤ reference accuracy to 10 to 38 Hz: ±0.35 mm (0.01 in); 38 to 2000 Hz: 2 g
		Optional onsite display on the top (T15)		≤ reference accuracy to 10 to 60 Hz: ±0.35 mm (0.01 in); 60 to 2000 Hz: 5 g

Performance characteristics – metal process isolating diaphragms

Reference accuracy – PMD75, FMD77, FMD78

The reference accuracy comprises the non-linearity (terminal based), hysteresis and non-reproducibility as per IEC 60770. The data refer to the calibrated span.

The following applies for the root-extracting characteristic curve:
The accuracy data of the Deltabar S are taken into the accuracy calculation of the flow rate with a factor of 0.5.

PMD75

Measuring cell	% of the set span
10 mbar (0.15 psi) 30 mbar (0.45 psi)	■ TD 1:1 = ±0.09 ■ TD > 1:1 = ±0.09 x TD
100 mbar (1.5 psi)	■ TD 1:1 to TD 4:1 = ±0.075 ■ TD > 4:1 = ±(0.012 x TD + 0.027)
≥500 mbar (7.5 psi)	■ TD 1:1 to TD 15:1 = ±0.075 ■ TD > 15:1 = ±(0.0015 x TD + 0.053)
Platinum version: ≥100 mbar (1.5 psi)	■ TD 1:1 = ±0.05

FMD77, FMD78

Measuring cell	FMD77	FMD78
	% of the set span (influence of the diaphragm seal included)	
100 mbar (1.5 psi)	■ TD 1:1 to TD 4:1 = ±0.15 ■ TD > 4:1 = ±(0.03 x TD + 0.03)	■ TD 1:1 to TD 4:1 = ±0.15 ■ TD > 4:1 = ±(0.03 x TD + 0.03)
≥500 mbar (7.5 psi), 3 bar (45 psi), 16 bar (240 psi)	■ TD 1:1 to TD 15:1 = ±0.075 ■ TD > 15:1 = ±(0.0015 x TD + 0.053)	■ TD 1:1 to TD 4:1 = ±0.15 ■ TD > 4:1 = ±(0.02 x TD + 0.07)
40 bar (600 psi)	—	■ TD 1:1 to TD 4:1 = ±0.15 ■ TD > 4:1 = ±(0.02 x TD + 0.07)

Thermal change of the zero output and the output span – PMD75

Measuring cell	–10 to +60 °C (14 to 140 °F)			
	AISI 316L/1.4435 or Alloy C process isolating diaphragm	Gold-rhodium process isolating diaphragm	Monel process isolating diaphragm	Tantalum process isolating diaphragm
	% of the set span			
10 mbar (0.15 psi), 30 mbar (0.45 psi)	±(0.30 x TD + 0.06)	±(0.60 x TD + 0.1)	±(0.60 x TD + 0.2)	±(0.5 x TD + 0.15)
100 mbar (1.5 psi)	±(0.18 x TD + 0.02)	±(0.18 x TD + 0.02)	±(0.18 x TD + 0.02)	±(0.23 x TD + 0.07)
500 mbar (7.5 psi), 3 bar (45 psi)	±(0.08 x TD + 0.05)			
16 bar (240 psi)	±(0.1 x TD + 0.10)			
40 bar (600 psi)	±(0.08 x TD + 0.05)			

Measuring cell	–40 to -10 °C (-40 to 14 °F), +60 to +85 °C (140 to 185 °F)
	all process isolating diaphragm materials
	% of the set span
10 mbar (0.15 psi), 30 mbar (0.45 psi)	±(0.45 x TD + 0.10)
100 mbar (1.5 psi)	±(0.30 x TD + 0.15)
500 mbar (7.5 psi), 3 bar (45 psi)	±(0.12 x TD + 0.10)

Measuring cell	–40 to -10 °C (-40 to 14 °F), +60 to +85 °C (140 to 185 °F)
	all process isolating diaphragm materials
	% of the set span
16 bar (240 psi)	±(0.15 x TD + 0.20)
40 bar (600 psi)	±(0.37 x TD + 0.10)

Influence of the operating pressure on zero point and span – PMD75, FMD77, FMD78

Note!
The influence of the operating pressure on the zero point can be corrected.

Material of the process isolating diaphragm	AISI 316L (1.4435), Alloy C		gold-rhodium[1)]		Monel	
	Influence of the operating pressure		Influence of the operating pressure		Influence of the operating pressure	
Measuring cell	on the zero point	on the span	on the zero point	on the span	on the zero point	on the span
10 mbar (0.15 psi)	±0.15 % v. URL/ 7 bar (105 psi)	±0.035 % v. URL/ 7 bar (105 psi)	±0.15 % v. URL/ 7 bar (105 psi)	±0.035 % v. URL/ 7 bar (105 psi)	±0.21 % v. URL/ 7 bar (105 psi)	±0.05 % v. URL/ 7 bar (105 psi)
30 mbar (0.45 psi)	±0.50 % v. URL/ 70 bar (1050 psi)	±0.14 % v. URL/ 70 bar (1050 psi)	±0.77 % v. URL/ 70 bar (1050 psi)	±0.14 % v. URL/ 70 bar (1050 psi)	±1.05 % v. URL/ 70 bar (1050 psi)	±0.21 % v. URL/ 70 bar (1050 psi)
100 mbar (1.5 psi)	±0.15 % v. URL/ 70 bar (1050 psi)	±0.14 % v. URL/ 70 bar (1050 psi)	±0.42 % v. URL/ 70 bar (1050 psi)	±0.42 % v. URL/ 70 bar (1050 psi)	±0.42 % v. URL/ 70 bar (1050 psi)	±0.42 % v. URL/ 70 bar (1050 psi)
500 mbar (7.5 psi)	±0.075 % v. URL/ 70 bar (1050 psi)	±0.14 % v. URL/ 70 bar (1050 psi)	±0.075 % v. URL/ 70 bar (1050 psi)	±0.14 % v. URL/ 70 bar (1050 psi)	±0.075 % v. URL/ 70 bar (1050 psi)	±0.14 % v. URL/ 70 bar (1050 psi)
3 bar (45 psi)						
16 bar (240 psi)						
40 bar (600 psi)						

1) The material of the process isolating diaphragm is Alloy C276 for PMD75 and 316L for FMD77/FMD78. The coating of the process isolating diaphragm is gold-rhodium.

Material of the process isolating diaphragm	Tantalum	
	Influence of the operating pressure	
Measuring cell	on the zero point	on the span
10 mbar (0.15 psi)	±0.32 % v. URL/ 7 bar (105 psi)	±0.07 % v. URL/ 7 bar (105 psi)
30 mbar (0.45 psi)	±1.60 % v. URL/ 70 bar (1050 psi)	±0.32 % v. URL/ 70 bar (1050 psi)
100 mbar (1.5 psi)	±0.42 % v. URL/ 70 bar (1050 psi)	±0.42 % v. URL/ 70 bar (1050 psi)
500 mbar (7.5 psi)	±0.14 % v. URL/ 70 bar (1050 psi)	±0.14 % v. URL/ 70 bar (1050 psi)
3 bar (45 psi)		
16 bar (240 psi)		
40 bar (600 psi)		

Total performance – PMD75

The "Total performance" specification comprises the non-linearity including hysteresis, non-reproducibility, the thermal change of the zero point as well as the influence of the static pressure (p_{st} = 70 bar (1050 psi)).
All specifications apply to the temperature range –10 to +60 °C (+14 to +140 °F).

Measuring cell	AISI 316L/1.4435 or Alloy C process isolating diaphragm	Gold-rhodium process isolating diaphragm	Monel process isolating diaphragm	Tantalum process isolating diaphragm
	% of the set span [1]			
10 mbar (0.15 psi)	±0.35	±0.64	±0.66	±0.61
30 mbar (0.45 psi)	±0.77	±0.99	±1.22	±1.66
100 mbar (1.5 psi)	±0.27	±0.50	±0.50	±0.30
≥500 mbar (7.5 psi) to TD 2:1	±0.15	±0.15	±0.15	±0.30

1) for measuring cells ≤ 30 mbar (0.45 psi) TD 1:1, for measuring cells ≥ 100 mbar (1.5 psi) TD 2:1

Long-term stability

	1 year	5 years	10 year
Measuring ranges	% of URL		
10 mbar (0.15 psi)	±0.100	±0.150	–
100 mbar (1.5 psi)	±0.180	–	–
500 mbar (7.5 psi)	±0.025	±0.050	±0.075
3 bar (45 psi)	±0.038	±0.075	±0.150
16 bar (240 psi)	±0.025	±0.110	±0.210

Total error

The total error comprises the long-term stability and the total performance.

Measuring cell	AISI 316L/1.4435 or Alloy C process isolating diaphragm	Gold-rhodium process isolating diaphragm	Monel process isolating diaphragm	Tantalum process isolating diaphragm
	% of URL/year			
10 mbar (0.15 psi)	±0.36	±0.64	±0.67	±0.62
30 mbar (0.45 psi)	±0.77	±0.99	±1.23	±1.66
100 mbar (1.5 psi)	±0.33	±0.50	±0.50	±0.48
≥500 mbar (7.5 psi)	±0.20	±0.20	±0.20	±0.35

Warm-up period – PMD75, FMD77, FMD78

- 4 to 20 mA HART: < 10 s
- PROFIBUS PA: 6 s
- FOUNDATION Fieldbus: 50 s

Performance characteristics – ceramic process isolating diaphragms

Reference accuracy – PMD70, FMD76

The reference accuracy comprises the non-linearity (terminal based), hysteresis and non-reproducibility as per IEC 60770. The data refer to the calibrated span.
The following applies for the root-extracting characteristic curve: The accuracy data of the Deltabar S are taken into the accuracy calculation of the flow rate with a factor of 0.5.

Measuring cell	% of the set span
25 mbar (0.375 psi)	■ TD 1:1 = ±0.15 ■ TD > 1:1 = ±0.15 x TD
100 mbar (1.5 psi)	■ TD 1:1 to TD 4:1 = ±0.075 ■ TD > 4:1 = ±(0.012 x TD + 0.027)
500 mbar (7.5 psi), 3 bar (45 psi)	■ TD 1:1 to TD 15:1 = ±0.075 ■ TD > 15:1 = ±(0.0015 x TD + 0.05252)
Platinum version: 100 mbar (1.5 psi), 500 mbar (7.5 psi), 3 bar (45 psi)	■ TD 1:1 = ±0.05

Thermal change of the zero output and the output span – PMD70, FMD76

Measuring cell	–10 to +60 °C (14 to 140 °F)	–20 to –10 °C (-4 to 14 °F), +60 to +85 °C (140 to 185 °F)
	% of the set span	
25 mbar (0.375 psi)	±(0.35 x TD + 0.05)	±(0.3 x TD + 0.15)
≥100 mbar (1.5 psi)	±(0.05 x TD + 0.05)	±(0.08 x TD + 0.07)

Influence of the operating pressure on zero point and span – PMD70, FMD76

Measuring cell	Influence of the operating pressure on the zero point	Influence of the operating pressure on the span
25 mbar (0.375 psi)	±0.7 % of URL/7 bar (105 psi)	±0.14 % of URL/7 bar (105 psi)
100 mbar (1.5 psi)	±0.175 % of URL/70 bar (1050 psi)	±0.14 % of URL/70 bar (1050 psi)
500 mbar (7.5 psi)	±0.075 % of URL/70 bar (1050 psi)	±0.14 % of URL/70 bar (1050 psi)
3 bar (45 psi)	±0.075 % of URL/70 bar (1050 psi)	±0.14 % of URL/70 bar (1050 psi)

Note!
The influence of the operating pressure on the zero point can be corrected.

Total performance – PMD70, FMD76

The "Total performance" specification comprises the non-linearity including hysteresis, non-reproducibility, the thermal change of the zero point as well as the influence of the static pressure (p_{st} = 70 bar (1050 psi)).
All specifications apply to the temperature range –10 to +60 °C (+14 to +140 °F) and a turn down of 1:1.

Measuring cell	% of the set span
≥500 mbar (7.5 psi)	■ ±0.15

Long-term stability

	1 year	5 years	10 year
Measuring ranges	% of URL		
10 mbar (0.15 psi)	±0.100	±0.150	–
100 mbar (1.5 psi)	±0.180	–	–
500 mbar (7.5 psi)	±0.025	±0.050	±0.075
3 bar (45 psi)	±0.038	±0.075	±0.150
16 bar (240 psi)	±0.025	±0.110	±0.210

Total error

The total error comprises the long-term stability and the total performance.
All specifications apply to the temperature range –10 to +60 °C (+14 to +140 °F) and a turn down of 1:1.

Measuring cell	% of URL/year
25 mbar (0.375 psi), 100 mbar (1.5 psi)	■ ±0.33
500 mbar (7.5 psi), 3 bar (45 psi)	■ ±0.20

Warm-up period – PMD70, FMD76

- 4 to 20 mA HART: < 10 s
- PROFIBUS PA: 6 s
- FOUNDATION Fieldbus: 50 s

Operating conditions (Installation)

General installation instructions

- The position-dependent zero point shift can be corrected directly at the device via operating keys, and also in hazardous areas in the case of devices with external operation. Diaphragm seals also shift the zero point, depending on the installation position (→ 74 ff, "Installation instructions, diaphragm seal systems" section).
- The housing of the Deltabar S can be rotated up to 380°. See → 31, "Turning the housing" section.
- Endress+Hauser offers a mounting bracket for installing the device on pipes or walls. See → 28, "Wall and pipe-mounting" section.
- When measuring in media containing solids, such as dirty liquids, installing separators and drain valves is useful for capturing and removing sediment.
- Using a three-valve or five-valve manifold allows for easy commissioning, installation and maintenance without interrupting the process.
- General recommendations for the pressure piping can be found in DIN 19210 "Methods for measurement of fluid flow; differential piping for flow measurement devices" or the corresponding national or international standards.
- Install the pressure piping with a continuous gradient of at least 10%.
- When routing the pressure piping outdoors, ensure sufficient anti-freeze protection, e.g. by using pipe heat tracing.
- For FMD77 and FMD78: → 74 ff, "Installation instructions, diaphragm seal system" section.
- Use flushing rings for flange and cell diaphragm seals if buildup or clogging can be expected at the diaphragm seal connection. The flushing ring can be fitted between the process connection and diaphragm seal. Material buildup in front of the process isolating diaphragm can be flushed away, and the pressure chamber vented, via the two lateral flushing holes.

Measuring arrangement

Flow measurement

- The PMD70 and PMD75 are best suited to flow measurement.
- Measuring arrangement for gases: Mount device above the measuring point.
- Measuring arrangement for liquids and vapors: Mount device below the measuring point.
- For flow measurement in vapors, mount the condensate traps at the same level as the tapping point and at the same distance from Deltabar S.

Level measurement

- PMD70, PMD75, FMD76 and FMD77 are best suited to level measurement in open tanks. All Deltabar S devices are suitable for level measurement in closed tanks.

Measuring arrangement for level measurement in open tanks

- PMD70, PMD75: Mount device below the lower measuring connection. The negative side is open to atmospheric pressure.
- FMD76, FMD77: Mount device directly on the tank. The negative side is open to atmospheric pressure.

Measuring arrangement for level measurement in closed tanks and closed tanks with superimposed vapor

- PMD70, PMD75: Mount device below the lower measuring connection. Always connect the negative side above the maximum level via pressure piping.
- FMD76, FMD77: Mount device directly on the tank. Always connect the negative side above the maximum level via pressure piping.
- In the case of level measurement in closed tanks with superimposed vapor, a condensate trap ensures the pressure remains constant on the minus side.

Pressure measurement

- The PMD70 and PMD75 and FMD78 are best suited to differential pressure measurement.
- Measuring arrangement for gases: Mount device above the measuring point.
- Measuring arrangement for liquids and vapors: Mount device below the measuring point.
- For differential pressure measurement in vapor, mount the condensate traps at the same level as the tapping point and at the same distance from Deltabar S.

Wall and pipe-mounting

Endress+Hauser offers a mounting bracket for installing the device on pipes or walls.
→ 80 ff, feature 110, "Additional option 2".
Order number for 7/16 UNF: 52024609
Order number for M10: 52024611
Order number for M12: 52024610

Note!
If a valve block is used, its dimensions should also be taken into consideration.

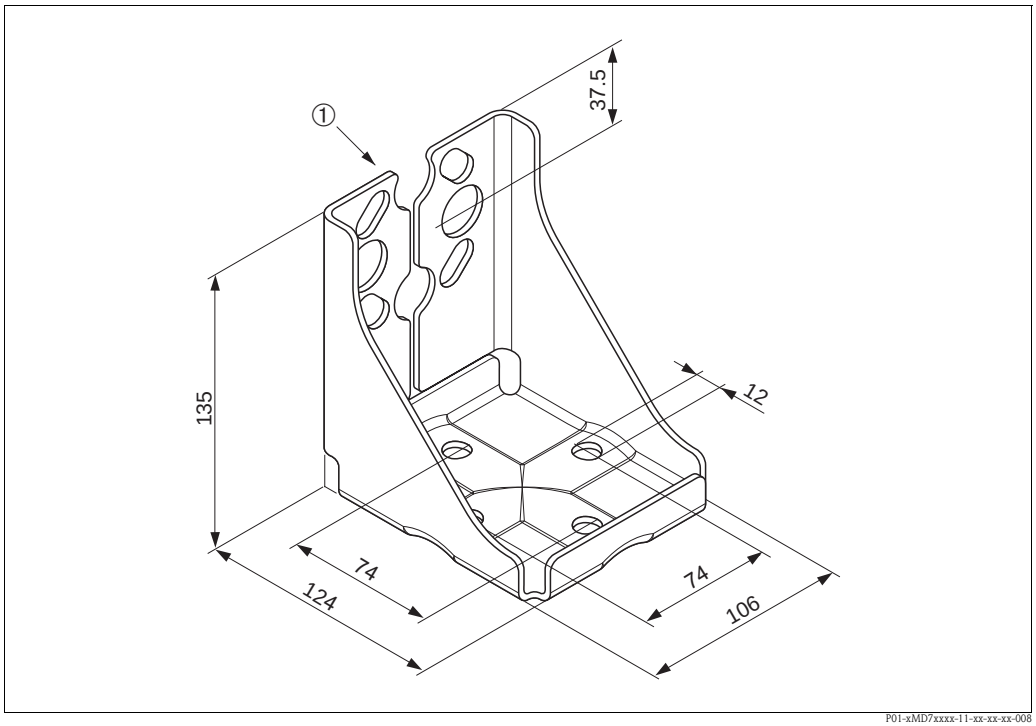

Mounting bracket for wall and pipe-mounting
Materials: Screws and washers A2-70 or A4*, bracket and retainer 1.4301.*
The material of the screws used to secure the device depend on the order code.

A bracket including mounting accessories for pipe mounting is included with the device.

1 Device mounting

"Separate housing" version

With the "separate housing" version, you are able to mount the housing with the electronics insert at a distance from the measuring point. This version facilitates trouble-free measurement:
- Under particularly difficult measuring conditions (at installation locations that are cramped or difficult to access)
- If rapid cleaning of the measuring point is required
- If the measuring point is exposed to vibrations

You can choose between different cable versions:
- PE (2 m (6.6 ft), 5 m (16 ft) and 10 m (33 ft))
- FEP (5 m (16 ft)).

→ 🗎 81 ff, feature 110, "Additional option 2", version "G".

For the dimensions, see → 🗎 59.

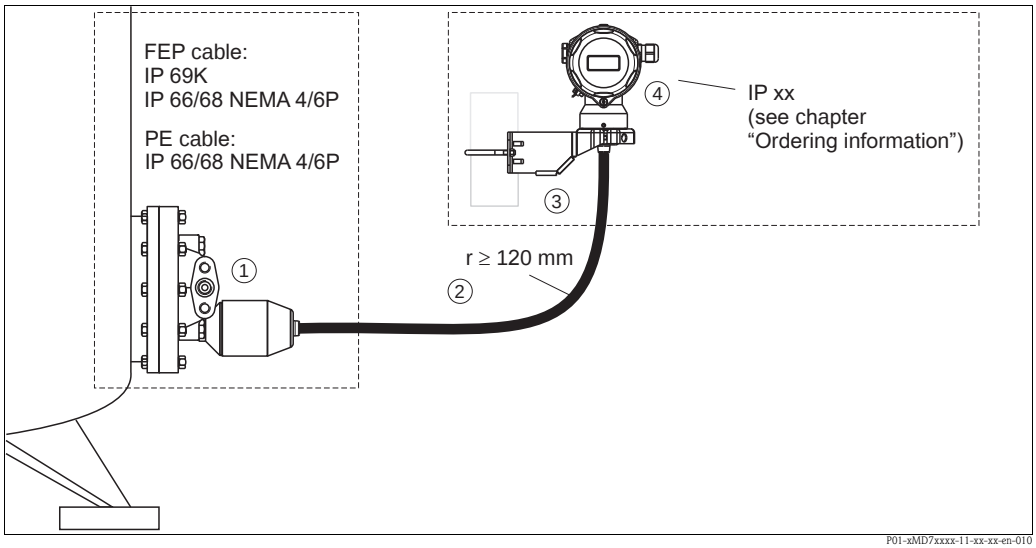

In the case of the "separate housing" version, the sensor is delivered with the process connection and cable ready mounted. The housing and a mounting bracket are enclosed as separate units. The cable is provided with a socket at both ends. These sockets are simply connected to the housing and the sensor.

1 Process connection with sensor
2 Cable, both ends are fitted with a socket
3 Mounting bracket provided, suitable for pipe and wall mounting
4 Housing with electronic insert

Degree of protection for the process connection and sensor with the use of
- FEP cable:
  - IP 69K
  - IP 66 NEMA 4/6P
  - IP 68 (1.83 mH_2O for 24 h) NEMA 4/6P
- PE cable:
  - IP 66 NEMA 4/6P
  - IP 68 (1.83 mH_2O for 24 h) NEMA 4/6P

Technical data of the PE and FEP cable:
- Minimum bending radius: 120 mm (4.72 in)
- Cable extraction force: max. 450 N (101 lbf)
- Resistance to UV light

Use in hazardous area:
- Intrinsically safe installations (Ex ia/IS)
- FM/CSA IS: for Div. 1 installation only

Reduction of the installation height

If the separate housing is used, the installation height of the process connection is reduced compared to the dimensions of the standard version.

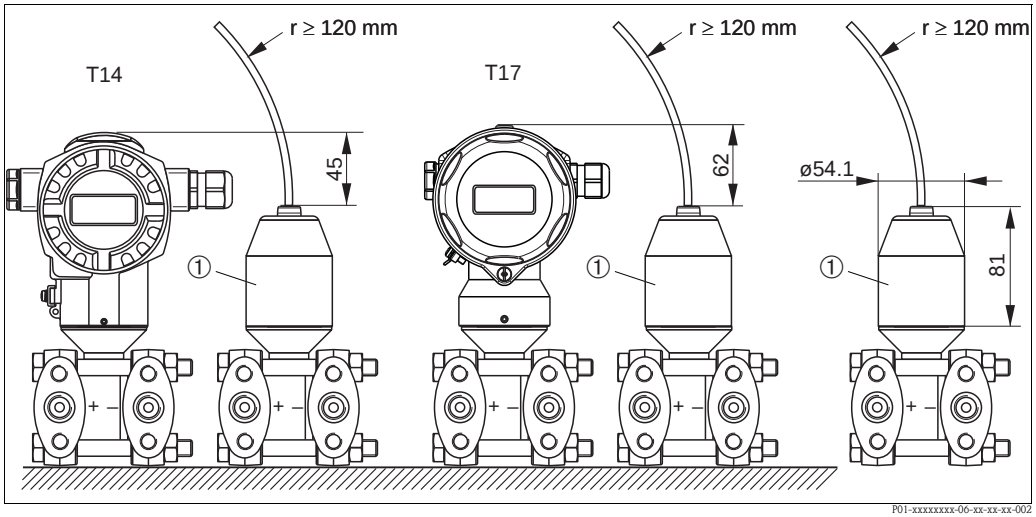

Reduction of the installation height of the process connection when using the separate housing.
1 Process connection adapter.

Turning the housing

The housing can be rotated up to 380° by loosening the Allen screw.

Your benefits

- Simple mounting by optimally aligning the housing
- Good, accessible device operation
- Optimum readability of the onsite display (optional).

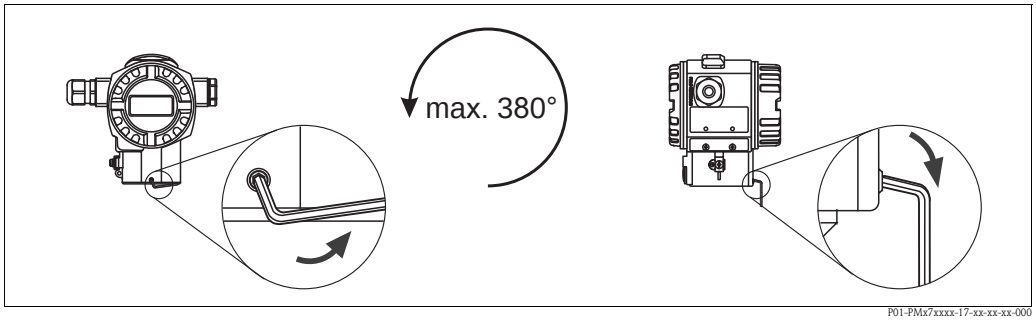

Aligning the housing by releasing the setscrew
T14 and T15 housing: 2 mm (0.08 in) Allen screw; T17 housing: 3 mm (0.12 in) Allen screw

Oxygen applications

Oxygen and other gases can react explosively to oils, grease and plastics, such that, among other things, the following precautions must be taken:
– All components of the system, such as measuring devices, must be cleaned in accordance with the BAM (DIN 19247) requirements.
– Dependent on the materials used, a certain maximum temperature and a maximum pressure for oxygen applications must not be exceeded.

The devices suitable for gaseous oxygen applications are listed in the following table with the specification p_{max}.

Order code for devices [1] cleaned for oxygen applications	p_{max} for oxygen applications	T_{max} for oxygen applications
PMD70 – * * * ** * * * 2 * *, Devices with 500 mbar (7.5 psi) or 3000 mbar (45 psi) measuring cell	30 bar (450 psi)	60 °C (140 °F)
PMD70 – * * * ** * * * 2 * *, Devices with 25 mbar (0.375 psi) or 100 mbar (1.5 psi) measuring cell	PN of the measuring cell	60 °C (140 °F)
PMD75 – * * * ** * * * K * *	160 bar (2400 psi)	85 °C (185 °F)
PMD75 – * * * ** * * * 2 * *	160 bar (2400 psi)	60 °C (140 °F)
PMD75 – * * * ** * * * 3 * *	160 bar (2400 psi)	60 °C (140 °F)
FMD76 – * * * ** * T * * *, Devices with 500 mbar (7.5 psi) or 3000 mbar (45 psi) measuring cell	30 bar (450 psi)	60 °C (140 °F)
FMD76 – * * * ** * T * * *, Devices with 25 mbar (0.375 psi) or 100 mbar (1.5 psi) measuring cell	PN of the measuring cell	60 °C (140 °F)
FMD77 – * * * ** T * F * *	PN of the flange	60 °C (140 °F)
FMD78 – * * * ** * ** 4 * * FMD78 – * * * ** * ** D * *	90 bar (1350 psi)	85 °C (185 °F)

1) Only devices, not accessories or enclosed accessories.

Ultrapure gas applications

Endress+Hauser also offers devices for special applications, such as ultrapure gas, cleaned from oil and grease. No special restrictions regarding the process conditions apply to these devices.
→ 🗎 80 ff, PMD70 and PMD75: feature 80 "Seal", FMD76 and FMD77: feature 70 "Process connection low-pressure side, material, seal".

Applications with hydrogen

With regard to materials in which hydrogen formation takes place, hydrogen atoms can diffuse through the metal process isolating diaphragms. This can result in incorrect measurement results.
Endress+Hauser offers process isolating diaphragms with gold-rhodium coating for this application.
→ 🗎 84 "Ordering information PMD75", → 🗎 91 "Ordering information FMD77" or → 🗎 94 "Ordering information FMD78", feature 60 "Process isolating diaphragm material".

Operating conditions (Environment)

Ambient temperature range

- PMD75, FMD77, FMD78: –40 to +85 °C (-40 to +185 °F), devices for lower temperatures on request
- PMD70, FMD76: –20 to +85 °C (-4 to +185 °F)
- Onsite display: –20 to +70 °C (-4 to +158 °F)
  Extended temperature application range with restrictions in optical properties such as display speed and contrast: –40 to +85 °C (-40 to +185 °F)
- Separate housing: -20 to +60 °C (-4 to +140 °F) (installation without insulation)

For devices for use in hazardous areas, see Safety instructions, Installation or Control Drawing (→ 🗎 97, "Safety Instructions" and "Installation/Control Drawings" sections).

The device can be used in this temperature range. The values of the specification, such as thermal change, may be exceeded.

Storage temperature range

- –40 to +90 °C (-40 to +194 °F)
- Onsite display: –40 to +85 °C (-40 to +185 °F)
- Separate housing: -40 to +60 °C (-40 to +140 °F)

Degree of protection

- → 🗎 80 ff, feature 30 "Housing; Cable entry; Degree of protection".
- Degree of protection IP 68 for T17 housing: 1.83 mH_2O for 24 h
- Separate housing → 🗎 30

Climate class

Class 4K4H (air temperature: –20 to 55 °C (-4 to 131 °F), relative humidity: 4 to 100 %) fulfilled as per DIN EN 60721-3-4 (condensation possible)

Vibration resistance

Device/accessory	Housing	Test standard	Vibration resistance
PMD70/ FMD76	Optional onsite display on the side (T14)	GL	Guaranteed for: 2 to 18 Hz: ±4 mm (0.16 in); 18 to 500 Hz: 5 g in all 3 planes
PMD75	Optional onsite display on the side (T14)	IEC 61298-3	Guaranteed for: 10 to 60 Hz: ±0.35 mm (0.0138 in); 60 to 2000 Hz: 5 g in all 3 planes
PMD75	Optional onsite display on the top (T15)		
With mounting bracket		IEC 61298-3	Guaranteed for: 10 to 60 Hz: ±0.15 mm (0.0059 in); 60 to 500 Hz: 2 g in all 3 planes

Electromagnetic compatibility

- Electromagnetic compatibility to EN 61326 and NAMUR recommendation EMC (NE21). For details refer to the Declaration of Conformity.
- With enhanced immunity against electromagnetic fields as per EN 61000-4-3:
  30 V/m with closed cover (for devices with T14 or T15 housing)
- Maximum deviation: < 0.5 % of span [1]
- All EMC measurements were performed with a turn down (TD) = 2:1.

1) Larger deviations possible with PMD70 with 25 mbar (0.375 psi) or 100 mbar (1.5 psi) measuring cell

Overvoltage protection (optional)

- Overvoltage protection:
  – Nominal functioning DC voltage: 600 V
  – Nominal discharge current: 10 kA
- Surge current check î = 20 kA as per DIN EN 60079-14: 8/20 µs satisfied
- Arrester AC current check I = 10 A satisfied

→ 🗎 81 ff, feature 100 "Additional option 1" and feature 110 "Additional option 2", version "M Overvoltage protection".

Note!
Devices with integrated overvoltage protection must be grounded.

Operating conditions (Process)

Process temperature limits (temperature at transmitter)

	Process connection material		
Device	**316L / Alloy C**	**C22.8**	**PVDF**
PMD70	-20 to +85 °C (-4 to 185 °F)	-10 to +85 °C (+14 to 185 °F)	-10 to +60 °C (+14 to 140 °F)
PMD75	-40 to +85 °C (-40 to 185 °F)	-10 to +85 °C (+14 to 185 °F)	-
FMD76	-20 to +85 °C (-4 to 185 °F)	-10 to +85 °C (+14 to 185 °F)	-10 to +60 °C (+14 to 140 °F)
FMD77 / FMD78	Dependent on the diaphragm seal and filling oil: up to + 400 °C (752 °F)		

Note!
- For oxygen applications, observe → 32, "Oxygen applications" section.
- PMD70, FMD76, PMD75 and FMD78: Observe the process temperature range of the seal.
  → See also the following section: "Process temperature range, seals".
- FMD77 and FMD78: Observe the temperature application limits of the diaphragm seal oil. See → 73, "Diaphragm seal filling oils" section.
- FMD77 and FMD78: Do not use diaphragm seals with 0.09 mm (0.0035 in) PTFE foil on AISI 316L (1.4435/1.4405) for vacuum applications, upper temperature limit +204 °C (+399 °F).

Process temperature range, seals

PMD70 (with ceramic process isolating diaphragms)

Versions for feature 80 in the order code	Seal	Process temperature range
A	FKM Viton	–20 to +85 °C (-4 to +185 °F)
B	EPDM	–20 to +85 °C (-4 to +185 °F)
D	Kalrez, Compound 4079	+5 to +85 °C (+41 to +185 °F)
E	Chemraz, Compound 505	–20 to +85 °C (-4 to +185 °F)
1	FKM Viton, cleaned from oil and grease	–10 to +85 °C (+14 to +185 °F)
2	FKM Viton, cleaned for oxygen service	–10 to +60 °C (+14 to +140 °F)

FMD76 (with ceramic process isolating diaphragms)

Versions for feature 70 in the order code	Seal	Process temperature range
B, D, F, U	FKM Viton	–20 to +85 °C (-4 to +185 °F)
K, L	EPDM FDA 21 CFR 177.2600	–20 to +85 °C (-4 to +185 °F)
M, N	Kalrez, Compound 4079	+5 to +85 °C (+41 to +185 °F)
P, Q	Chemraz, Compound 505	–20 to +85 °C (-4 to +185 °F)
S	FKM Viton, cleaned from oil and grease	–10 to +85 °C (+14 to +185 °F)
T	FKM Viton, cleaned for oxygen service	–10 to +60 °C (+14 to +140 °F)
G	FKM Viton/PVDF inlay	–10 to +60 °C (+14 to +140 °F)

PMD75 (with metal process isolating diaphragms)

Versions for feature 80 in the order code	Seal	Process temperature range [1)]
A	FKM Viton	–20 to +85 °C (-4 to +185 °F)
C	PTFE	–40 to +85 °C (-40 to +185 °F)
F	NBR	–20 to +85 °C (-4 to +185 °F)
H	Copper	–40 to +85 °C (-40 to +185 °F)

Versions for feature 80 in the order code	Seal	Process temperature range [1]
K	Copper, cleaned for oxygen service	–20 to +85 °C (-4 to +185 °F)
1	FKM Viton, cleaned from oil and grease	–10 to +85 °C (+14 to +185 °F)
2	FKM Viton, cleaned for oxygen service	–10 to +60 °C (+14 to +140 °F)
3	PTFE, cleaned for oxygen applications	–20 to +60 °C (-4 to +140 °F)

1) Lower temperatures on request

FMD77 (with diaphragm seal)

Versions for feature 70 in the order code	Seal on the LP side (–)	Process temperature range [1]	OPL bar (psi)	PN bar (psi)
B, D, F, U	FKM Viton	–20 to +85 °C (-4 to +185 °F)	See chapter "Measuring range (PMD75, FMD77, FMD78 (with metal process isolating diaphragms)" → 🗎 8.	
H, J	PTFE	–40 to +85 °C (-40 to +185 °F)		
K, L	EPDM	–40 to +85 °C (-40 to +185 °F)		
S	FKM Viton, cleaned from oil and grease	–10 to +85 °C (+14 to +185 °F)		
T	FKM Viton, cleaned for oxygen service	–10 to +60 °C (+14 to +140 °F)		
M, N	Kalrez, Compound 6375	0 to +5 °C (+32 to +41 °F)	44...49 (660...735)	29...33 (435...495)
		+5 to +10 °C (+41 to +50 °F)	49...160 (735...2400)	33...107 (495...1605)
		+10 to +85 °C (+50 to +185 °F)	160 (2400)	107 (1605)
P, Q	Chemraz, Compound 505	–10 to +25 °C (14 to +77 °F)	130...160 (1950...2400)	87...107 (1305...1605)
		+25 to +85 °C (77 to +185 °F)	160 (2400)	107 (1605)

1) Lower temperatures on request

Pressure specifications

- The maximum pressure for the measuring device depends on the lowest-rated element with regard to pressure.
  See the following sections:
  – → 🗎 8, "Measuring range" section
  – "Mechanical construction" section.
  The MWP (maximum working pressure) is specified on the nameplate. This value refers to a reference temperature of 20°C (68°F), or 100°F (38 °C) for ANSI flanges, and may be applied to the device for an unlimited time. Observe pressure-temperature dependency.
- The pressure values permitted at higher temperatures can be found in the following standards:
  – EN 1092-1: 2001 Tab. 18 [1]
  – ASME B 16.5a – 1998 Tab. 2-2.2 F316
  – ASME B 16.5a – 1998 Tab. 2.3.8 N10276
  – JIS B 2220
- For PMD70 and PMD75, the MWP applies for the temperature ranges specified in the "Ambient temperature range" (→ 🗎 33) and "Process temperature limits" (→ 🗎 34) sections.
- The test pressure corresponds to the over pressure limit of the measuring device (OPL = 1.5 x MWP) and may only be applied temporarily so that no permanent damage develops.
- The Pressure Equipment Directive (EC Directive 97/23/EC) uses the abbreviation "PS". The abbreviation "PS" corresponds to the MWP (maximum working pressure) of the measuring device.
- In the case of sensor range and process connections where the over pressure limit (OPL) of the process connection is smaller than the nominal value of the sensor, the device is set at the factory, at the very maximum, to the OPL value of the process connection. If you want to use the entire sensor range, select a process connection with a higher OPL value (1.5 x PN; PN = MWP).
- In oxygen applications, the values for "p_{max} and T_{max} for oxygen applications" as per → 🗎 32, "Oxygen applications" may not be exceeded.

1) With regard to their stability-temperature property, the materials 1.4435 and 1.4404 are grouped together under 13EO in EN 1092-1: 2001 Tab. 18. The chemical composition of the two materials can be identical.

Mechanical construction

Dimensions of T14 housing, optional display on the side

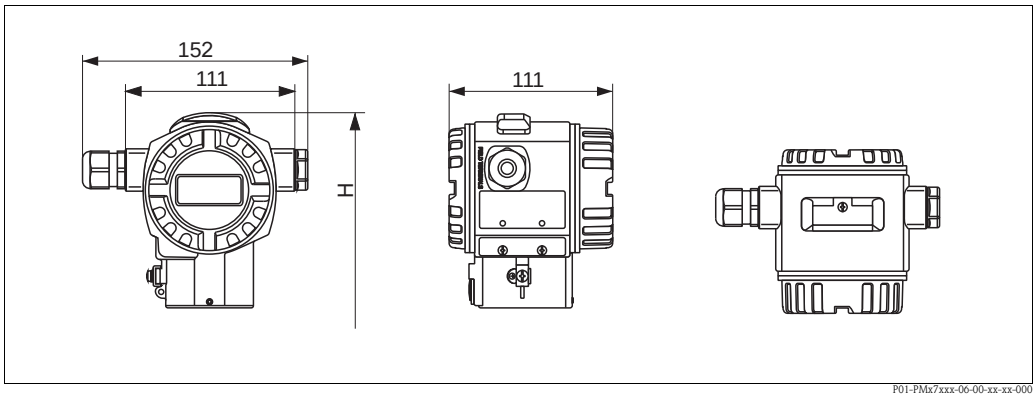

P01-PMx7xxx-06-00-xx-xx-000

Front view, left-hand side view, top view
→ See the process connection in question for installation height H. Housing weight see → 📄 59.

Dimensions of T15 housing, optional display on the top

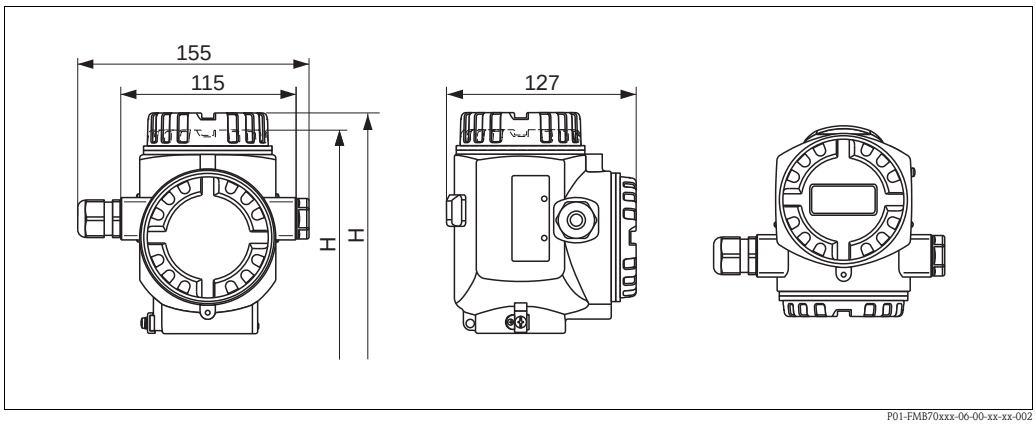

P01-FMB70xxx-06-00-xx-xx-002

Front view, left-hand side view, top view
→ See the process connection in question for installation height H. Housing weight see → 📄 59.

Dimensions of T17 housing (hygienic), optional display on the side

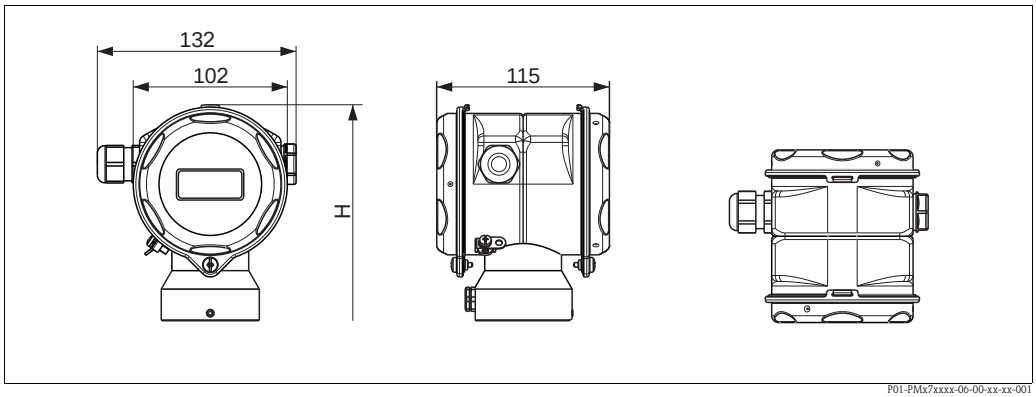

P01-PMx7xxxx-06-00-xx-xx-001

Front view, left-hand side view, top view
→ See the process connection in question for installation height H. Housing weight see → 📄 59.

Process connections PMD70 with ceramic process isolating diaphragms

Note!
Some device versions have CRN approval. For a CRN-approved device, a CRN-approved process connection (→ 🗎 81, feature 70 "Process connection") has to be ordered with a CSA approval (→ 🗎 80, feature 10 "Approval"). These devices are fitted with a separate plate bearing the registration number 0F10524.5C.

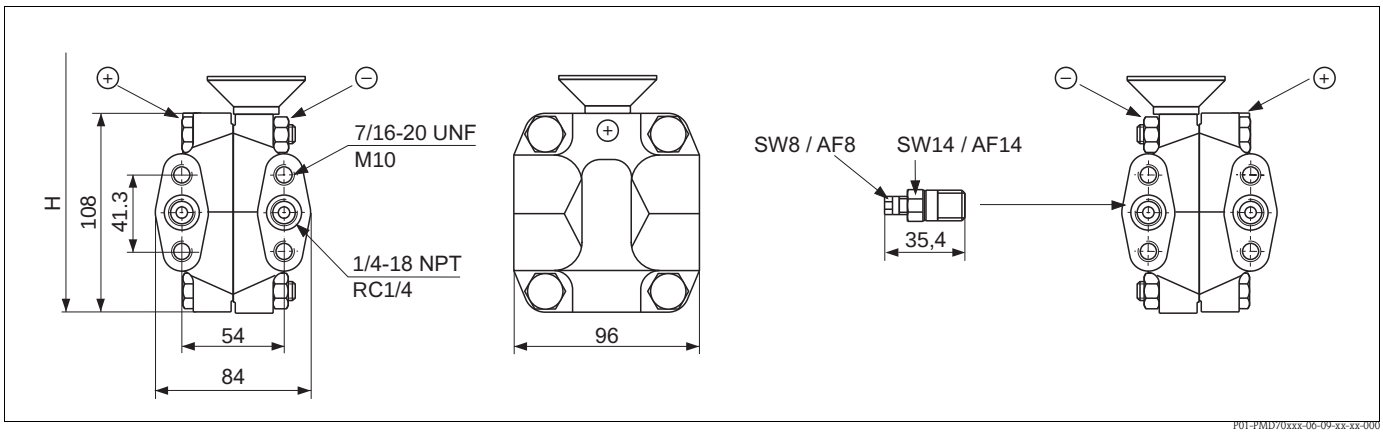

Process connection PMD70, oval flange

H Device height see → 🗎 38, section "Device height H"

Version	Connection	Mounting	Material	Accessories	Weight [1]
B	1/4-18 NPT IEC 61518	7/16-20 UNF	Steel C 22.8 [2]	2 vent valves included AISI 316L (1.4404)	4.0 kg
D	1/4-18 NPT IEC 61518	7/16-20 UNF	AISI 316L (1.4435)		
F	1/4-18 NPT IEC 61518	7/16-20 UNF	Alloy C276 (2.4819)	Vent valves Alloy C276 (2.4819), see → 🗎 80, feature 110 "Additional option 2".	4.2 kg
U	RC 1/4	7/16-20 UNF	AISI 316L (1.4435)	2 vent valves included AISI 316L (1.4404)	4.0 kg
1	1/4-18 NPT IEC 61518	PN 160: M10	Steel C 22.8 [2]		
2	1/4-18 NPT IEC 61518	PN 160: M10	AISI 316L (1.4435)		
3	1/4-18 NPT IEC 61518	PN 160: M10	Alloy C276 (2.4819)	Vent valves Alloy C276 (2.4819), see Page 80, feature 110 "Additional option 2".	4.2 kg

1) Process connection weight, for housing weight see → 🗎 59

2) Side flanges made out of C22.8 are zinc-plated. Endress+Hauser recommends to use side flanges made out of 316L for applications with water.

Process connections PMD70 with ceramic process isolating diaphragms (continued)

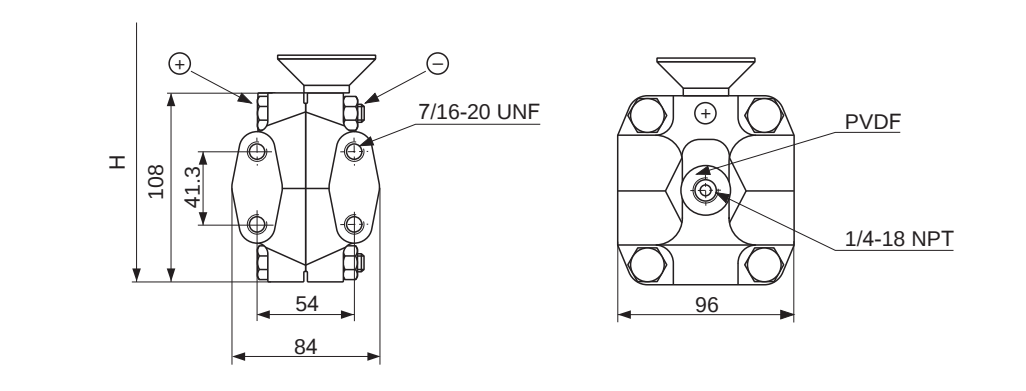

Process connection PMD70, version G, PVDF Inlay, MWP 10 bar (150 psi), OPL max. 15 bar (225 psi), process temperature T = –10 to +60°C (14 to +140°F)

H Device height see → 38, "Device height H" section

Version	Connection	Mounting	Material	Weight [1)]
G	1/4-18 NPT IEC 61518	7/16-20 UNF	PVDF	3.8 kg

1) Process connection weight, for housing weight see → 59

Device height H

Description	Device height H
T14 housing, optional display on the side	253 mm (9.96 in)
T15 housing without display, flat cover	259 mm (10.2 in)
T15 housing with display, high cover	271.5 mm (10.7 in)
T17 housing, optional display on the side	269 mm (10.6 in)

Process connections PMD75 with metal process isolating diaphragms

Note!
Some device versions have CRN approval. For a CRN-approved device, a CRN-approved process connection (→ 🗎 88, feature 70 "Process connection") has to be ordered with a CSA approval (→ 🗎 83, feature 10 "Approval"). These devices are fitted with a separate plate bearing the registration number 0F10524.5C.

Oval flange, connection 1/4-18 NPT or RC 1/4

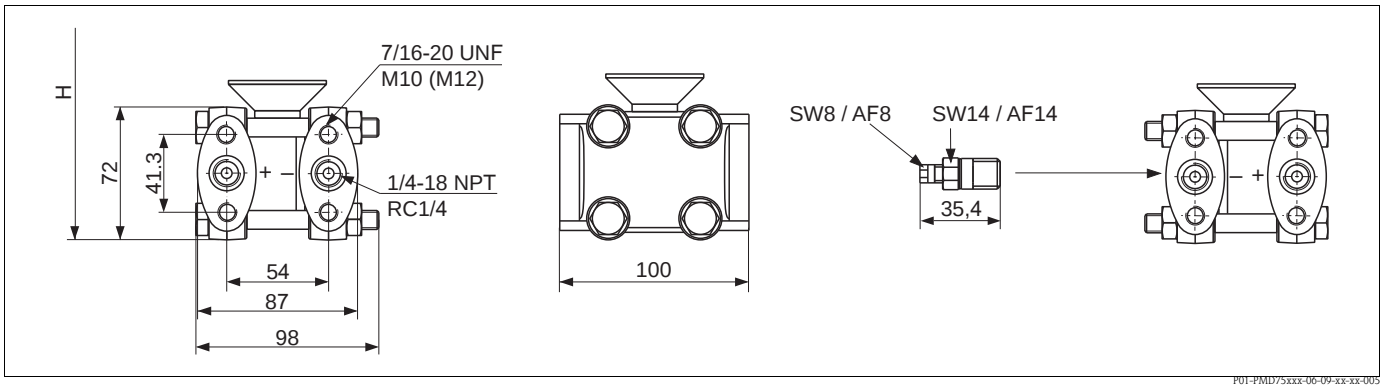

Process connection PMD75,
Top: 10 mbar and 30 mbar measuring cell; bottom: measuring cell ≥ 100 mbar

H Device height see → 🗎 41, "Device height H" section

Version	Connection	Mounting	Material	Accessories	Weight [1]
B	1/4-18 NPT IEC 61518	7/16-20 UNF	Steel C 22.8 [2]	2 vent valves included AISI 316L (1.4404)	4.2 kg
D	1/4-18 NPT IEC 61518	7/16-20 UNF	AISI 316L (1.4435 or 1.4404)		
F	1/4-18 NPT IEC 61518	7/16-20 UNF	CW12MW [3]	Vent valves Alloy C276 (2.4819), see → 🗎 83, feature 110 "Additional option 2"	4.5 kg
U	RC 1/4	7/16-20 UNF	AISI 316L (1.4435 or 1.4404)	2 vent valves included AISI 316L (1.4404)	4.2 kg
1	1/4-18 NPT IEC 61518	– PN 160: M10 – PN 420: M12	Steel C 22.8 [2]		
2	1/4-18 NPT IEC 61518	– PN 160: M10 – PN 420: M12	AISI 316L (1.4435 or 1.4404)		
3	1/4-18 NPT IEC 61518	– PN 160: M10 – PN 420: M12	CW12MW [3]	Vent valves Alloy C276 (2.4819), → 🗎 83, feature 110 "Additional option 2"	4.5 kg

1) Weight of process connections without vent valves with 10 mbar (0.15 psi) or 30 mbar (0.45 psi) measuring cell, process connections without vent valves with measuring cells ≥100 mbar (1.5 psi) weigh approx. 800 g (28.22 oz) less. Housing weight see → 🗎 59.

2) Side flanges made out of C22.8 are zinc-plated. Endress+Hauser recommends to use side flanges made out of 316L for applications with water.

3) Listed material is equivalent to Alloy C276.

Process connections PMD75 with metal process isolating diaphragms (continued)

Oval flange, connection 1/4-18 NPT or RC 1/4, with side vent

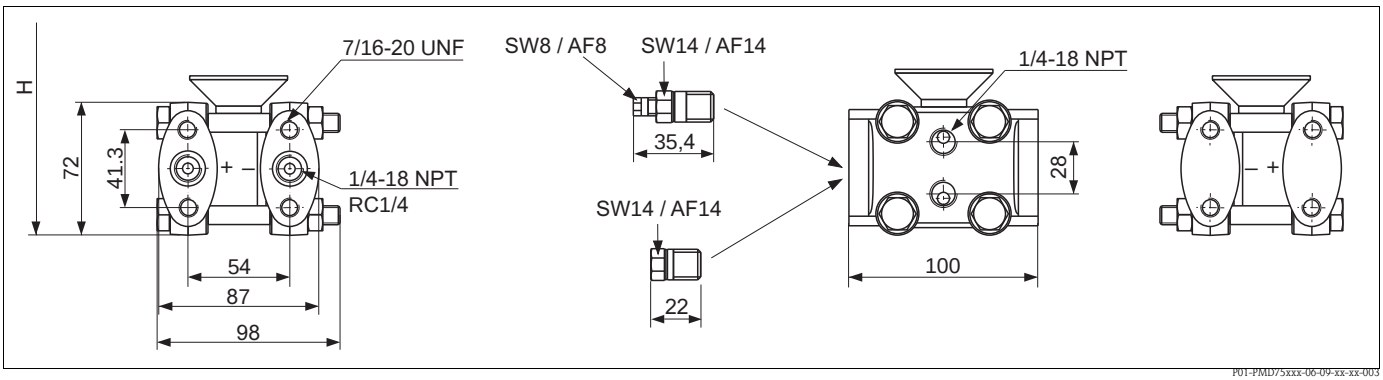

H Device height see → 🗎 41, "Device height H" section

Version	Connection	Mounting	Material	Accessories	Weight [1]
C	1/4-18 NPT IEC 61518	7/16-20 UNF	Steel C 22.8 [2]	4 locking screws and 2 vent valves AISI 316L (1.4404)	4.2 kg
E	1/4-18 NPT IEC 61518	7/16-20 UNF	AISI 316L [3]		
H	1/4-18 NPT IEC 61518	7/16-20 UNF	Alloy C276 (2.4819)	Vent valves Alloy C276 (2.4819), see → 🗎 83, feature 110 "Additional option 2"	4.5 kg
V	RC 1/4	7/16-20 UNF	AISI 316L [3]	4 locking screws and 2 vent valves AISI 316L (1.4404)	4.2 kg

1) Weight of process connections without vent valves with 10 mbar (0.15 psi) or 30 mbar (0.45 psi) measuring cell, process connections without vent valves with measuring cells ≥100 mbar (1.5 psi) weigh approx. 800 g (28.22 oz) less. Housing weight see → 🗎 59.

2) Side flanges made out of C22.8 are zinc-plated. Endress+Hauser recommends to use side flanges made out of 316L for applications with water.

3) PN 160 bar (2400 psi) measuring cells: AISI 316L/1.4435, PN 420 bar (6300 psi) measuring cells: AISI 316L (1.4435 or 1.4404)

Process connections PMD75 with metal process isolating diaphragms (continued)

Oval flange, prepared for diaphragm seal mount

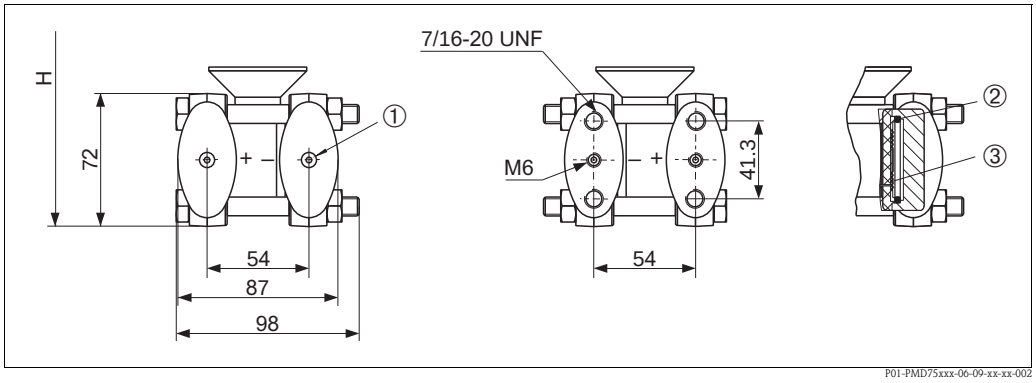

Left: Process connection PMD75, version W, prepared for diaphragm seal mount
Right: Position of the copper ring seal

H *Device height → see the following section "Device height H"*
1 *Diaphragm seal attachment*
2 *Copper ring seal*
3 *Process isolating diaphragm*

Device height H

Description	Device height H [1)]
T14 housing, optional display on the side	217 mm (230 mm)
T15 housing without display, flat cover	223 mm (236 mm)
T15 housing with display, high cover	235.5 mm (248.5 mm)
T17 housing, optional display on the side	233 mm (246 mm)

1) Values for devices with 10 mbar (0.15 psi) and 30 mbar (0.45) psi measuring cell in brackets

Process connection FMD76 with ceramic process isolating diaphragms

Note!
- Some device versions have CRN approval. For a CRN-approved device, a CRN-approved process connection (→ 🗎 91, feature 70 "Process connection") has to be ordered with a CSA approval (→ 🗎 87, feature 10 "Approval"). These devices are fitted with a separate plate bearing the registration number 0F10524.5C.
- FMD76 devices with an EN/DIN flange DN 80 PN 40, an ANSI flange 3" 150 lbs or a JIS flange 80 K 10 A can only be mounted with an open-ended wrench.

EN/DIN flanges, connection dimensions as per EN 1092-1/DIN 2527

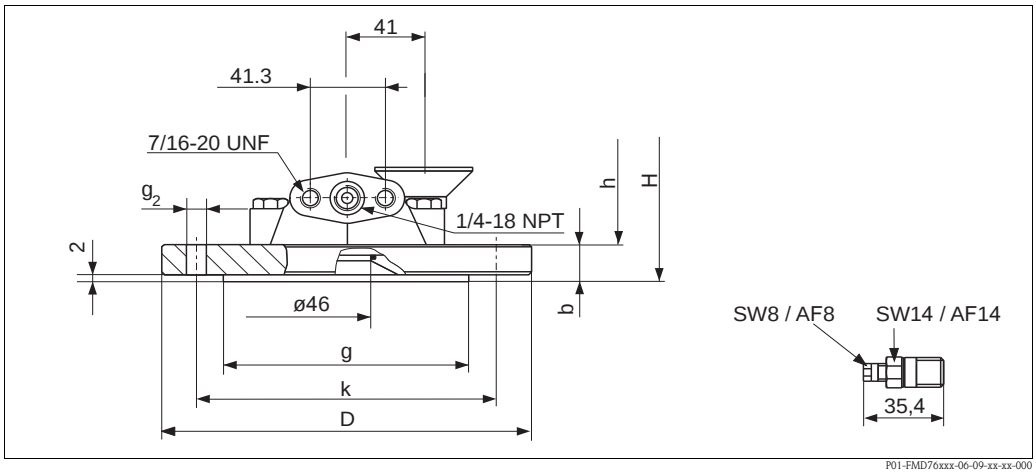

Process connection FMD76, high-pressure side: EN/DIN flange, Low-pressure side: connection 1/4-18 NPT
Application limits for version "G" in feature 70 "Process connection low-pressure side" with PVDF Inlay:
MWP 10 bar (150 psi), OPL max. 15 bar (225 psi), process temperature limits T = –10 to +60°C (+14 to +140 °F)

H Device height see → 🗎 44, "Device height H, devices with flange" section
h Height of the device without flange thickness b

	Flange [1]							Boltholes			
Version	**Material**	**Nominal diameter**	**Shape [2]**	**Nominal pressure**	**Diameter D** [mm]	**Thickness b** [mm]	**Raised face g** [mm]	**Quantity**	**Diameter g_2** [mm]	**Hole circle k** [mm]	**Flange weight [3]** [kg]
B	AISI 316L	DN 80	B1 (D)	PN 10-40	200	24	138	8	18	160	5.3
D	ECTFE [4]	DN 80	–	PN 10-40	200	24	–	8	18	160	5.3
E	Alloy C276 (2.4819)	DN 80	B1 (D)	PN 10-40	200	24	138	8	18	160	6
F	AISI 316L	DN 100	B1 (C)	PN 10-16	220	22	–	8	18	180	6
G	AISI 316L	DN 100	B1 (D)	PN 25-40	235	26	162	8	22	190	8
H	ECTFE [4]	DN 100	–	PN 25-40	235	26	–	8	22	190	8
J	Alloy C276 (2.4819)	DN 100	B1 (D)	PN 25-40	235	26	162	8	22	190	9
L	ECTFE [4]	DN 100	–	PN 10-16	220	22	–	8	18	180	6
M	Alloy C276 (2.4819)	DN 100	B1 (C)	PN 10-16	220	22	–	8	18	180	6.8

1) The roughness of the surface in contact with the media, including the sealing surface of the flanges (all standards) made of Hastelloy C, Monel or tantalum, is Ra <0.8 µm (31.5 µin). Lower surface roughness on request.

2) Designation as per DIN 2527 in brackets

3) Housing weight see → 🗎 59

4) ECTFE coating on AISI 316L (1.4435). When operating in hazardous areas, avoid electrostatic charge of the plastic surfaces.

Process connection FMD76 with ceramic process isolating diaphragms (continued)

ANSI flanges, connection dimensions as per ANSI B 16.5, raised face RF and JIS flanges, connection dimensions as per JIS B 2220 BL, raised face RF

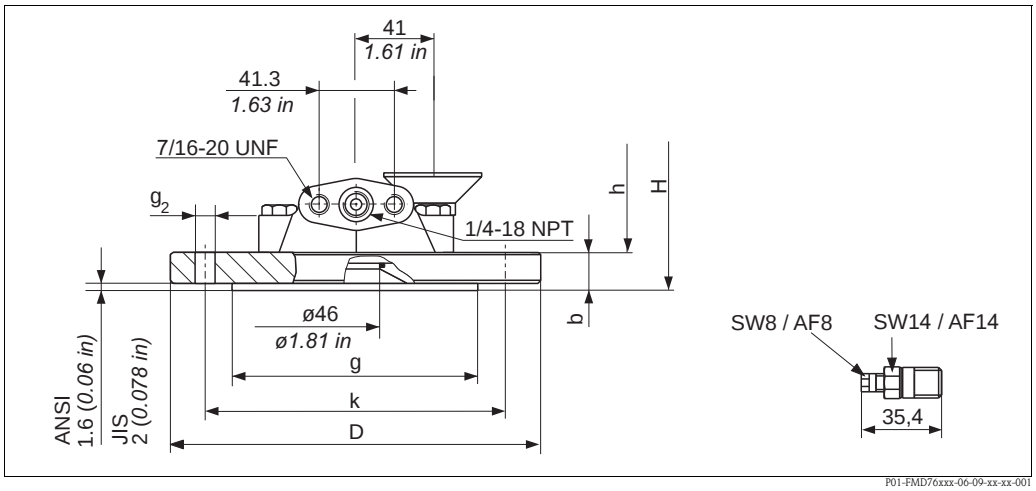

Process connection FMD76, high-pressure side: ANSI or JIS flange, Low-pressure side: connection 1/4-18 NPT

H Device height see → 44, "Device height H, devices with flange" section
h Height of the device without flange thickness b

	Flange [1]						Boltholes			
Version	**Material**	**Nominal diameter**	**Class/ nominal pressure**	**Diameter** **D** [in (mm)]	**Thickness** **b** [in (mm)]	**Raised face** **g** [in (mm)]	**Quantity**	**Diameter** **g_2** [in (mm)]	**Hole circle** **k** [in (mm)]	**Flange weight [2]** [kg]
ANSI flanges										
P	AISI 316/316L [3]	3 in	150 lb./sq.in	7.5 (190.5)	0.94 (23.9)	5 (127)	4	0.75 (19.1)	6 (152.4)	4.9
R	ECTFE [4]									4.9
S	Alloy C276									5.5
T	AISI 316/316L [3]	4 in	150 lb./sq.in	9 (228.5)	0.94 (23.9)	6.19 (157.2)	8	0.75 (19.1)	7.5 (190.5)	7.1
U	ECTFE [4]									7.1
V	Alloy C276									8
W	AISI 316/316L [3]	4 in	300 lb./sq.in	10 (254)	1.25 (31.8)	6.19 (157.2)	8	0.88 (22.4)	7.88 (200.2)	11.7
JIS flanges										
1	AISI 316L	80 A	10 K	7.32 (185)	0.71 (18)	5 (127)	8	0.75 (19.1)	5.9 (150)	3.3
3	Alloy C276									3.7
4	AISI 316L	100 A	10 K	8.27 (210)	0.71 (18)	5.95 (151)	8	0.75 (19.1)	6.89 (175)	4.4

1) The roughness of the surface in contact with the media, including the sealing surface of the flanges (all standards) made of Hastelloy C, Monel or tantalum, is Ra <0.8 µm (31.5 µin). Lower surface roughness on request.

2) Housing weight see → 59

3) Combination of AISI 316 for required pressure resistance and AISI 316L for required chemical resistance (dual rated)

4) ECTFE coating on AISI 316/316L. When operating in hazardous areas, avoid electrostatic charge of the plastic surfaces.

Process connection FMD76 with ceramic process isolating diaphragms (continued)

Device height H, devices with flange

Description	Device height H (h + b)
T14 housing, optional display on the side	175 mm (6.89 in) + flange thickness b (see tables)
T15 housing without display, flat cover	181 mm (7.13 in) + flange thickness b (see tables)
T15 housing with display, high cover	193.5 mm (7.62 in) + flange thickness b (see tables)
T17 housing, optional display on the side	191 mm (7.52 in) + flange thickness b (see tables)

Process connections FMD77 with diaphragm seal, low-pressure side

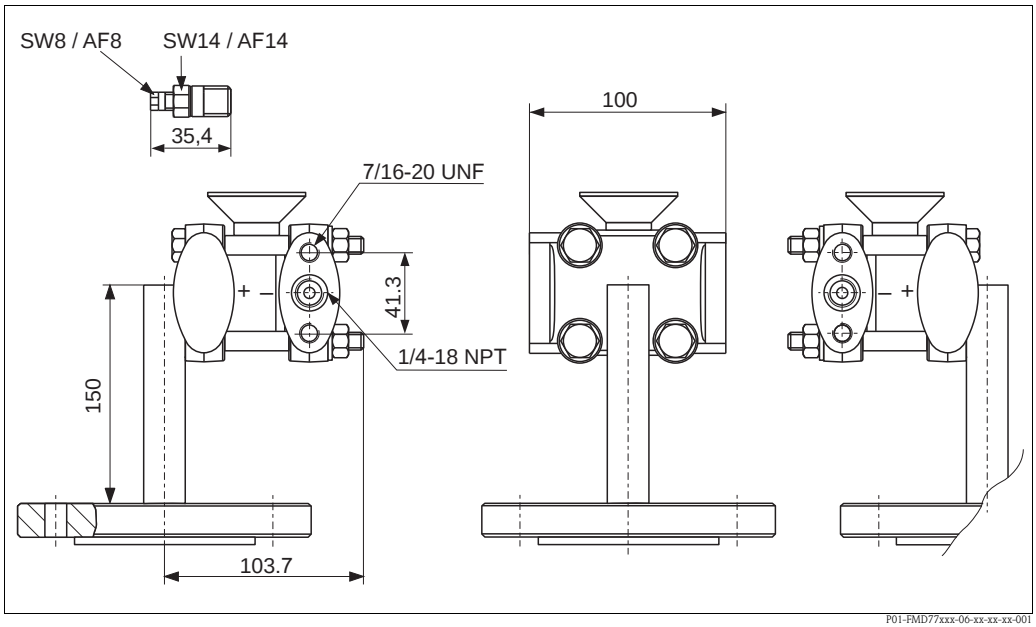

P01-FMD77xxx-06-xx-xx-xx-001

Low-pressure side: connection 1/4-18 NPT, mounting optionally 7/16-20 UNF incl. 1 vent valve AISI 316L (1.4404), Side flange material of the basic device: AISI 316L (1.4435 or 1.4404)
High-pressure side, see the following section "Process connections, high-pressure side FMD77"

Compact version

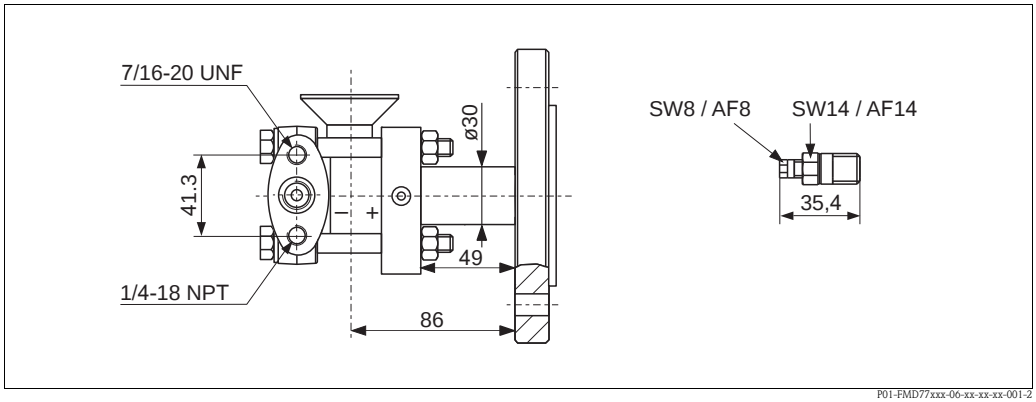

P01-FMD77xxx-06-xx-xx-xx-001-2

Low-pressure side: connection 1/4-18 NPT, mounting optionally 7/16-20 UNF incl. 1 vent valve AISI 316L (1.4404), Side flange material of the basic device: AISI 316L (1.4435 or 1.4404)
High-pressure side, see the following section "Process connections, high-pressure side FMD77"

Process connections FMD77 with diaphragm seal, high-pressure side

Note!
- The weights of the diaphragm seals are given in the tables. See → 39 for the weight of the transmitter and → 59 for the weight of the housing.
- The following drawings are drawings that illustrate how the system works in principle. In other words, the dimensions of a diaphragm seal supplied can deviate from the dimensions given in this document.
- With the use of high-temperature oils the design can deviate strongly.
- Some device versions have CRN approval. For a CRN-approved device, a CRN-approved process connection (→ 91, feature 70 "Process connection") has to be ordered with a CSA approval (→ 90, feature 10 "Approval"). These devices are fitted with a separate plate bearing the registration number 0F10524.5C.
- Observe the information in the "Planning instructions, diaphragm seal systems" section → 71 ff.
- For further information please contact your local Endress+Hauser Sales Center.

EN/DIN flanges, connection dimensions as per EN 1092-1/DIN 2527

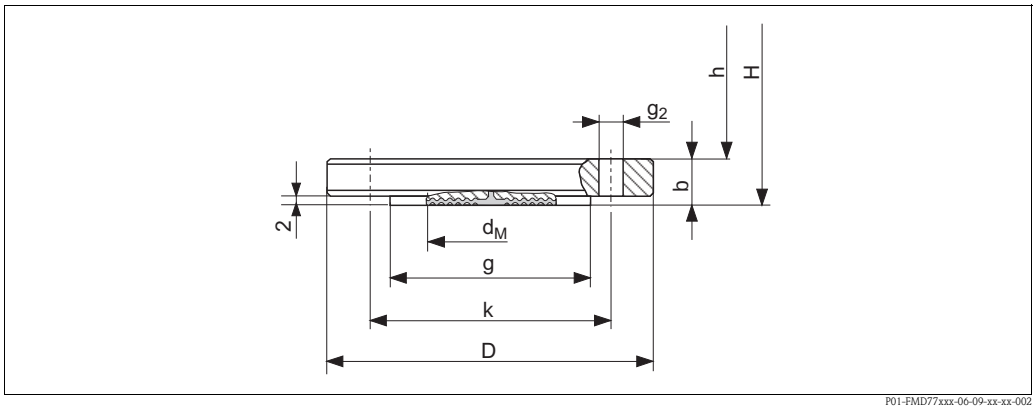

Process connection FMD77, high-pressure side EN/DIN flange, material AISI 316L

H Device height see → 49, "Device height H" section
h Height of the device without flange thickness b

	Flange [1]						Boltholes			Diaphragm seal	
Version	**Nominal diameter**	**Nominal pressure**	**Shape[2]**	**Diameter** **D** [mm]	**Thickness** **b** [mm]	**Raised face** **g** [mm]	**Quantity**	**Diameter** g_2 [mm]	**Hole circle** **k** [mm]	**Max. diameter of the process isolating diaphragm** d_M [mm]	**Flange weight [3]** [kg]
A	DN 50	PN 10-40	B1 (D)	165	20	102	4	18	125	59	3.0
B	DN 80	PN 10-40	B1 (D)	200	24	138	8	18	160	89	5.2
F	DN 100	PN 10-16	B1 (C)	220	20	–	8	18	180	89	4.8
G	DN 100	PN 25-40	B1 (D)	235	24	162	8	22	190	89	6.7

1) The roughness of the surface in contact with the media, including the sealing surface of the flanges (all standards) made of Hastelloy C, Monel or tantalum, is Ra <0.8 µm (31.5 µin). Lower surface roughness on request.

2) Designation as per DIN 2527 in brackets

3) Housing weight see → 59

EN/DIN flanges with extended diaphragm seal, connection dimensions as per EN 1092-1/DIN 2527

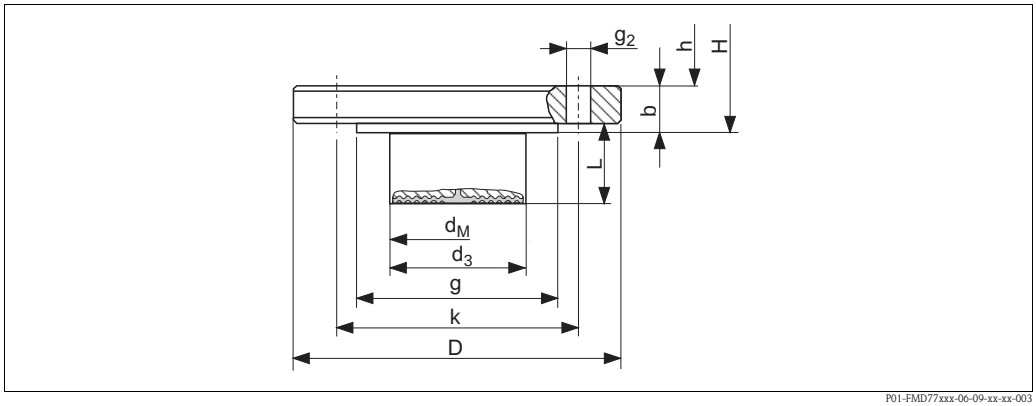

Process connection FMD77, high-pressure side EN/DIN, material AISI 316L

H Device height see → 49, "Device height H" section
h Height of the device without flange thickness b

	Flange [1]								Boltholes			Diaphragm seal	
Version	**Nominal diameter**	**Nominal pressure**	**Shape[2]**	**Diameter** D [mm]	**Thickness** b [mm]	**Raised face** g [mm]	**Extended diaphragm seal length** L [mm]	**Extended diaphragm seal diameter** d_3 [mm]	**Quantity**	**Diameter** g_2 [mm]	**Hole circle** k [mm]	**Max. diameter of the process isolating diaphragm** d_M [mm]	**Flange weight [3]** [kg]
C	DN 80	PN 10-40	B1 (D)	200	24	–	50	76	8	18	160	72	6.2
							100						6.7
							200						7.8

1) The roughness of the surface in contact with the media, including the sealing surface of the flanges (all standards) made of Hastelloy C, Monel or tantalum, is Ra <0.8 µm (31.5 µin). Lower surface roughness on request.

2) Designation as per DIN 2527 in brackets

3) Housing weight see → 59

Process connections FMD77 with diaphragm seal, high-pressure side (continued)

ANSI flanges, connection dimensions as per B 16.5, raised face RF

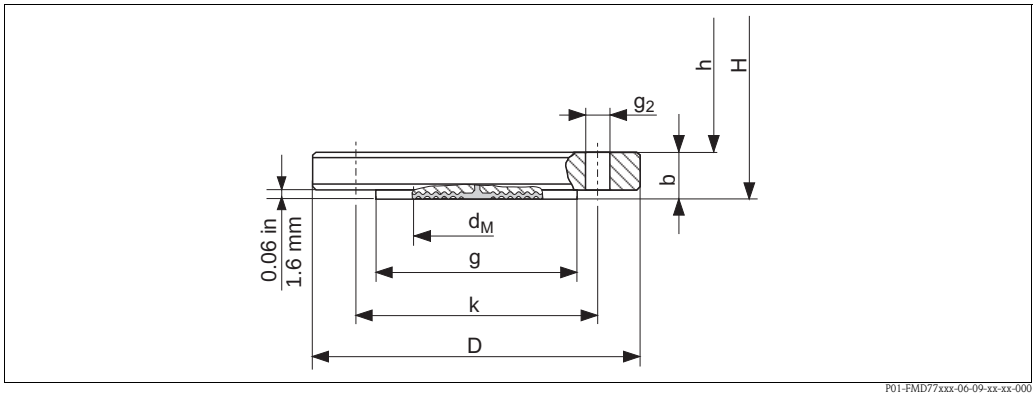

Process connection FMD77, high-pressure side ANSI flange, material AISI 316/316L

H Device height see → 📄 49, "Device height H" section
h Height of the device without flange thickness b

	Flange [1]					Boltholes			Diaphragm seal	
Version	**Nominal diameter**	**Class** [lb./sq.in]	**Diameter D** [in (mm)]	**Thickness b** [in (mm)]	**Raised face g** [in (mm)]	**Quantity**	**Diameter g_2** [in (mm)]	**Hole circle k** [in (mm)]	**Max. diameter of the process isolating diaphragm d_M** [in (mm)]	**Flange weight [2]** [kg]
N	2	150	6 (152.4)	0.75 (19.1)	3.62 (91.9)	4	0.75 (19.1)	4.75 (120.7)	2.32 (59)	2.6
P	3	150	7.5 (190.5)	0.94 (23.9)	5 (127)	4	0.75 (19.1)	6 (152.4)	3.50 (89)	5.1
T	4	150	9 (228.6)	0.94 (23.9)	6.19 (157.2)	8	0.75 (19.1)	7.5 (190.5)	3.50 (89)	7.2
W	4	300	10 (254)	1.25 (31.8)	6.19 (157.2)	8	0.88 (22.4)	7.88 (200.2)	3.50 (89)	11.7
Compact version										
5	3	150	7.5 (190.5)	0.94 (23.9)	5 (127)	4	0.75 (19.1)	6 (152.4)	3.50 (89)	5.1
6	3	300	8.25 (209.5)	1.12 (28.4)	5 (127)	8	0.75 (19.1)	6 (152.4)	3.50 (89)	7.0
8	4	150	9 (228.6)	0.94 (23.9)	6.19 (157.2)	8	0.75 (19.1)	7.5 (190.5)	3.50 (89)	7.2

1) The roughness of the surface in contact with the media, including the sealing surface of the flanges (all standards) made of Hastelloy C, Monel or tantalum, is Ra <0.8 µm (31.5 µin). Lower surface roughness on request.

2) Housing weight see → 📄 59

Process connections FMD77 with diaphragm seal, high-pressure side (continued)

ANSI flangeswith extended diaphragm seal, connection dimensions as per B 16.5, raised face RF

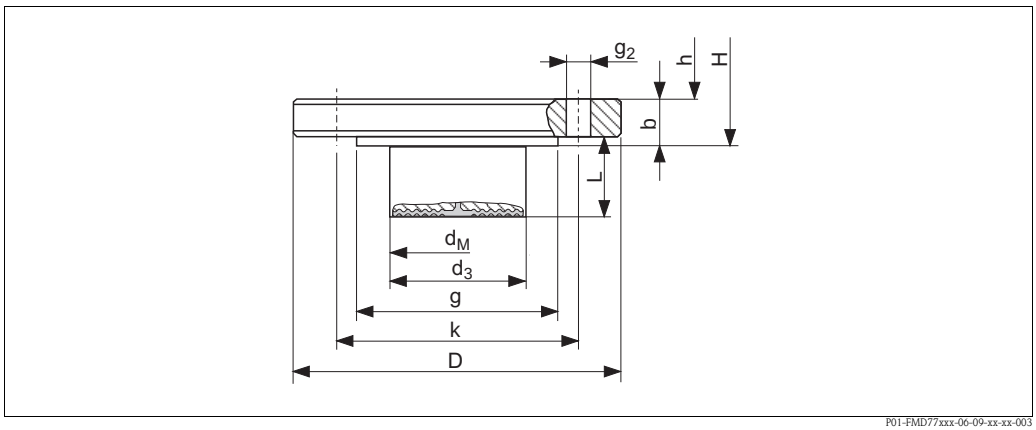

Process connection FMD77, high-pressure side ANSI flange, material AISI 316/316L

H Device height see → 49, "Device height H" section
h Height of the device without flange thickness b

	Flange [1]							Boltholes			Diaphragm seal	
Version	**Nominal diameter**	**Class**	**Diameter**	**Thickness**	**Raised face**	**Extended diaphragm seal length**	**Extended diaphragm seal diameter**	**Quantity**	**Diameter**	**Hole circle**	**Max. diameter of the process isolating diaphragm**	**Flange weight [2]**
			D	**b**	**g**	**L**	**d_3**		**g_2**	**k**	**d_M**	
		[lb./ sq.in]	[in (mm)]	[in (mm)]	[in (mm)]	[in (mm)]	[in (mm)]		[in (mm)]	[in (mm)]	[in (mm)]	[kg]
Q	3	150	7.5 (190.5)	0.94 (23.9)	5 (127)	2 (50.8)	2.99 (76)	4	0.75 (19.1)	6 (152.4)	2.83 (72)	6
						4 (101.6)						6.6
						6 (152.4)						7.1
						8 (203.8)						7.7
Compact version												
7	3	150	7.5 (190.5)	0.94 (23.9)	5 (127)	2 (50.8)	2.99 (76)	4	0.75 (19.1)	6 (152.4)	2.83 (72)	6
						4 (101.6)						6.6
						6 (152.4)						7.1
						8 (203.8)						7.7

1) The roughness of the surface in contact with the media, including the sealing surface of the flanges (all standards) made of Hastelloy C, Monel or tantalum, is Ra <0.8 µm (31.5 µin). Lower surface roughness on request.

2) Housing weight see → 59

Process connections FMD77 with diaphragm seal, high-pressure side (continued)

JIS flanges, connection dimensions as per JIS B 2220 BL, raised face RF

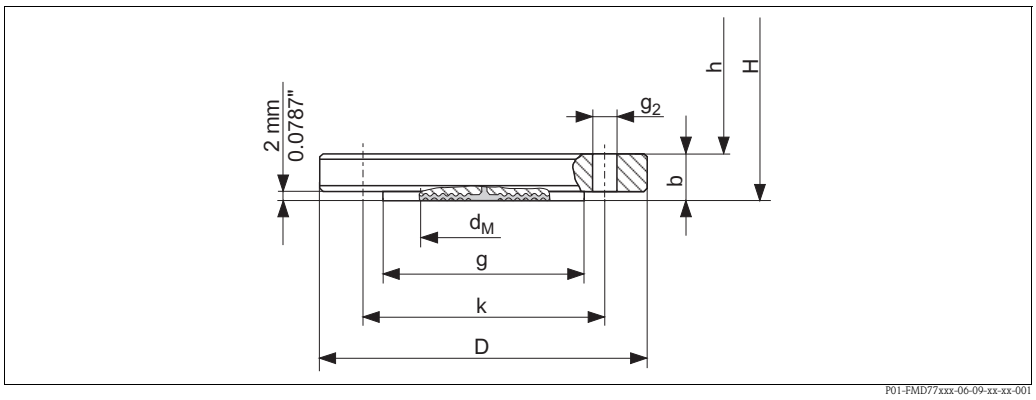

Process connection FMD77, high-pressure side, JIS flange, material AISI 316L (1.4435)

H Device height → see the following section "Device height H"
h Height of the device without flange thickness b

	Flange [1]					Boltholes			Diaphragm seal	
Version	**Nominal diameter**	**Nominal pressure**	**Diameter** **D** [mm (in)]	**Thickness** **b** [mm (in)]	**Raised face** **g** [mm (in)]	**Quantity**	**Diameter** **g_2** [mm (in)]	**Hole circle** **k** [mm (in)]	**Max. diameter of the process isolating diaphragm** **d_M** [mm (in)]	**Flange weight [2]** [kg]
X	50 A	10 K	155 (6.1)	16 (0.63)	96 (3.78)	4	19 (0.75)	120 (4.72)	59 (2.32)	2.3
1	80 A	10 K	185 (7.28)	18 (0.71)	126 (4.96)	8	19 (0.75)	150 (5.91)	89 (3.50)	3.5
4	100 A	10 K	210 (8.27)	18 (0.71)	151 (5.94)	8	19 (0.75)	175 (6.89)	89 (3.50)	4.7

1) The roughness of the surface in contact with the media, including the sealing surface of the flanges (all standards) made of Hastelloy C, Monel or tantalum, is Ra <0.8 µm (31.5 µin). Lower surface roughness on request.

2) Housing weight see → 59

Device height H

Description	Device height H (h + b)
T14 housing, optional display on the side	325 mm (12.8 in) + flange thickness b (see tables)
T15 housing without display, flat cover	331 mm (13 in) + flange thickness b (see tables)
T15 housing with display, high cover	343.5 mm (13.5 in) + flange thickness b (see tables)
T17 housing, optional display on the side	341 mm (13.4 in) + flange thickness b (see tables)

FMD78 basic device

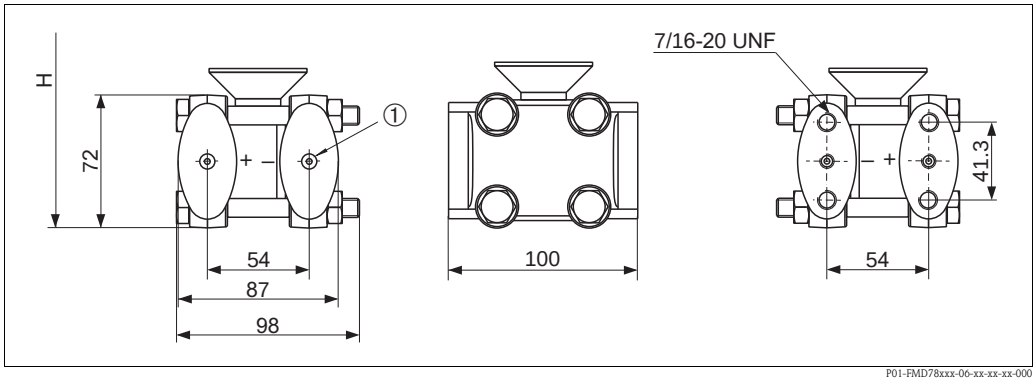

FMD78 basic device

H Device height → see the following section "Device height H"
1 Diaphragm seal attachment

Device height H

Description	Device height H
T14 housing, optional display on the side	217 mm (8.54 in)
T15 housing without display, flat cover	223 mm (8.78 in)
T15 housing with display, high cover	235.5 mm (9.27 in)
T17 housing, optional display on the side	233 mm (9.17 in)

Process connections FMD78 with diaphragm seal

Note!
- The weights of the diaphragm seals are given in the tables. See → 39 for the weight of the transmitter and → 59 for the weight of the housing.
- The following drawings are drawings that illustrate how the system works in principle. In other words, the dimensions of a diaphragm seal supplied can deviate from the dimensions given in this document.
- With the use of high-temperature oils the design can deviate strongly.
- Some device versions have CRN approval. For a CRN-approved device, a CRN-approved process connection (→ 80 ff, feature 70 "Process connection") has to be ordered with a CSA approval (→ 80 ff, feature 10 "Approval"). These devices are fitted with a separate plate bearing the registration number 0F10524.5C.
- Observe the information in the "Planning instructions, diaphragm seal systems" section → 71 ff.
- For further information please contact your local Endress+Hauser Sales Center.

Diaphragm seal cell structure

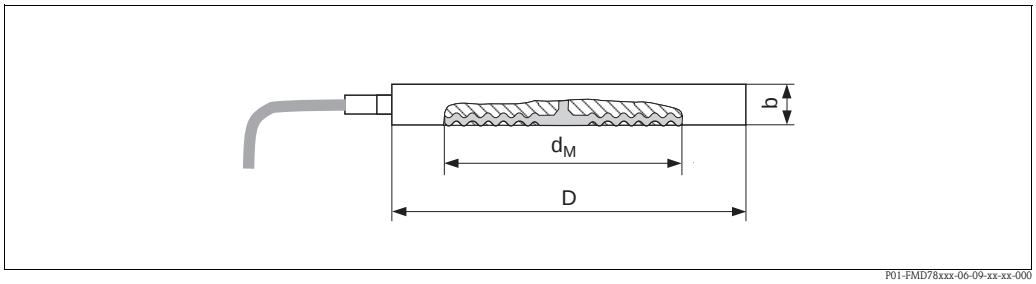

Process connection FMD78, material AISI 316L

	Flange				Diaphragm seal	
Version	**Nominal diameter**	**Nominal pressure** [1]	**Max. diameter** **D** [mm]	**Thickness** **b** [mm]	**Max. diameter of the process isolating diaphragm** d_M [mm]	**Weight of two diaphragm seals** [kg]
UF	DN 50	PN 16-400	102	20	59	2.6
UH	DN 80	PN 16-400	138	20	89	4.6
UJ	DN 100	PN 16-400	162	20	89	6.2

	Flange				Diaphragm seal	
Version	**Nominal diameter** [in]	**Nominal pressure** [1)] [lb/sq.in]	**Max. diameter** **D** [in (mm)]	**Thickness** **b** [in (mm)]	**Max. diameter of the process isolating diaphragm** d_M [in (mm)]	**Weight of two diaphragm seals** [kg]
VF	2	150-2500	4.01 (102)	0.79 (20)	2.32 (59)	2.6
VH	3	150-2500	5.35 (136)	0.79 (20)	3.50 (89)	4.6
VJ	4	150-2500	6.22 (158)	0.79 (20)	3.50 (89)	6.2

1) The specified nominal pressure applies to the diaphragm seal. The maximum pressure for the measuring device is dependent on the lowest-rated element, with regard to pressure, of the selected components. See also → 35, "Pressure specifications" section.

Process connections FMD78 with diaphragm seal (continued)

Thread ISO 228 G 1/2 B and ANSI 1/2 MNPT, separator with PTFE seal

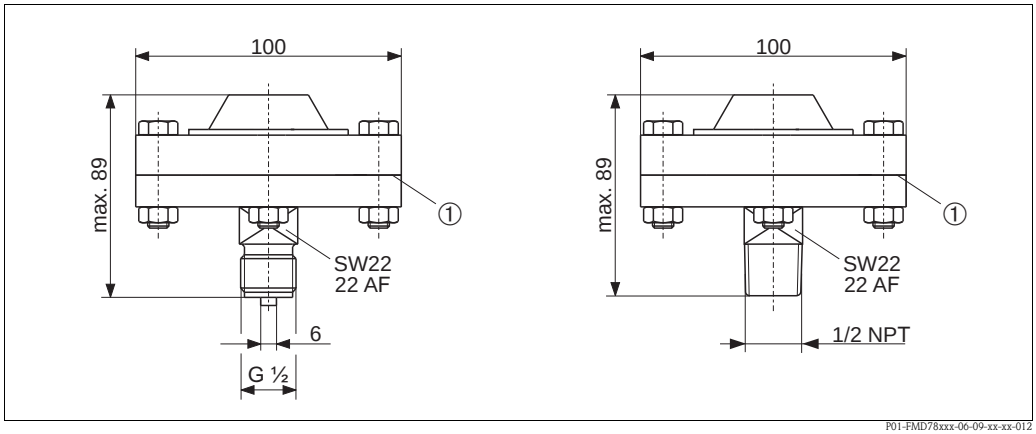

Process connection FMD78, left: with threaded connection ISO 228 G 1/2 B, right: with threaded connection ANSI 1/2 MNPT

1 PTFE seal as standard max. 260 °C (500 °F) (higher temperatures on request)

Version	Material	Nominal pressure	Weight of two diaphragm seals [kg]
GA	AISI 316L	PN 40	2.9
RL	AISI 316L	PN 40	2.9

Tri-Clamp ISO 2852

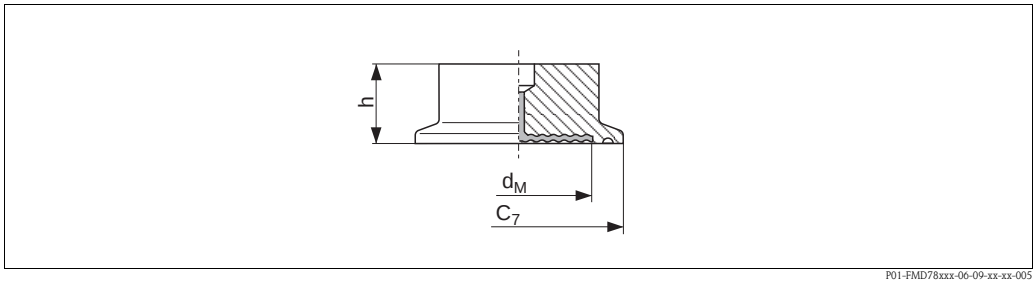

Process connection FMD78, material AISI 316L, surface roughness of the surfaces in contact with the media $R_a \leq 0.8\,\mu m$ (31.5 µin) as standard. Lower surface roughness on request.

Version	Nominal diameter ISO 2852	Nominal diameter DIN 32676	Nominal diameter [in]	Diameter C_7 [mm]	Max. diameter of the process isolating diaphragm d_M [mm]	Height h [mm]	Weight of two diaphragm seals [kg]
TB	DN 25	DN 25	1	50.5	24	37	0.64
TC	DN 38	DN 40	1 1/2	50.5	36	30	2.0
TD	DN 51	DN 50	2	64	48	30	2.2
TF	DN 76.1	–	3	91	73	30	2.4

Process connections FMD78 with diaphragm seal (continued)

Tri-Clamp pipe diaphragm seal ISO 2852

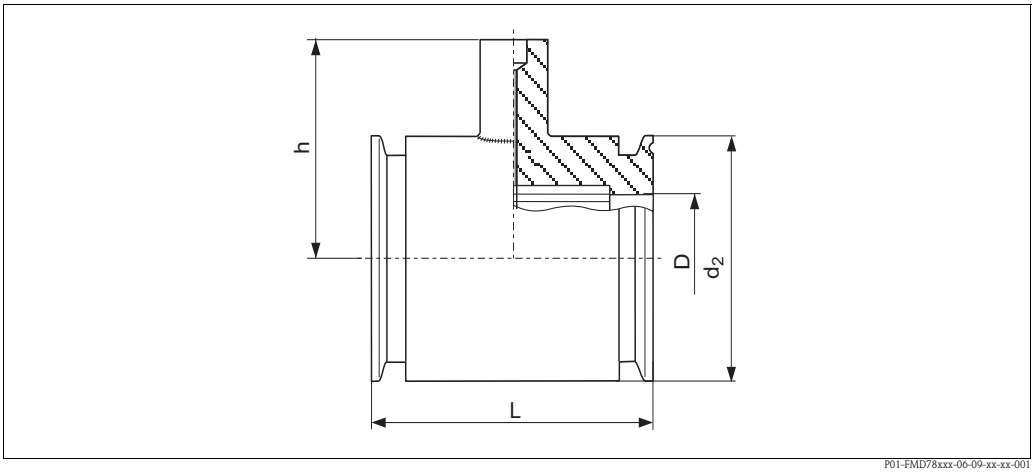

Process connection FMD78, material AISI 316L, surface roughness of the surfaces in contact with the media $R_a \leq 0.8\,\mu m$ (31.5 µin) as standard. Lower surface roughness on request.

Version	Nominal diameter ISO 2852	Nominal diameter [in]	Nominal pressure	Diameter D [mm]	Diameter d_1 [mm]	Diameter d_2 [mm]	Height h [mm]	Face-to-face length L [mm]	Weight of two diaphragm seals [kg]
SB	DN 25	1	PN 40	22.5	43.5	50.5	67	126	3.4
SC [1)]	DN 38	1 1/2	PN 40	35.5	43.5	50.5	67	126	2
SD [1)]	DN 51	2	PN 40	48.6	56.5	64	79	100	3.4

1) Including 3.1 and pressure test as per Pressure Equipment Directive, category II

Varivent N for pipes DN 40 – DN 162

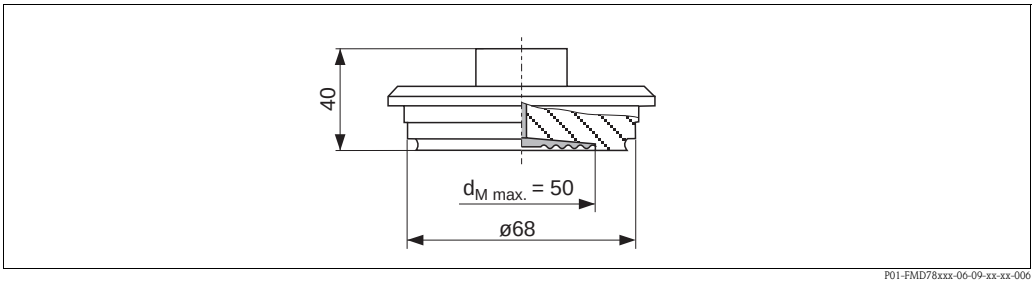

Process connection FMD78, surface roughness of the surfaces in contact with the media $R_a \leq 0.8\,\mu m$ (31.5 µin) as standard. Lower surface roughness on request.

Version	Material	Nominal pressure	Weight of two diaphragm seals [kg]
TR	AISI 316L	PN 40	2.6

Process connections FMD78 with diaphragm seal (continued)

DRD DN50 (65 mm)

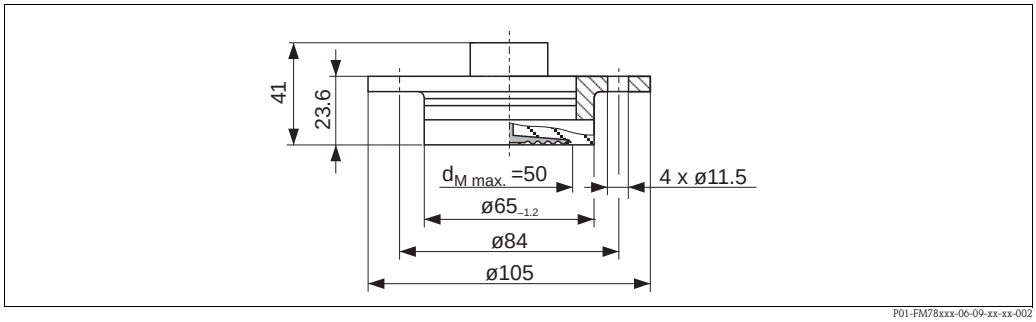

Process connection FMD78, surface roughness of the surfaces in contact with the media $R_a \leq 0.8\,\mu m$ (31.5 µin) as standard. Lower surface roughness on request.

Version	Material	Nominal pressure	Weight of two diaphragm seals [kg]
TK	AISI 316L	PN 25	1.5

Hygienic connection, sanitary tank spud, extended diaphragm seal 2"

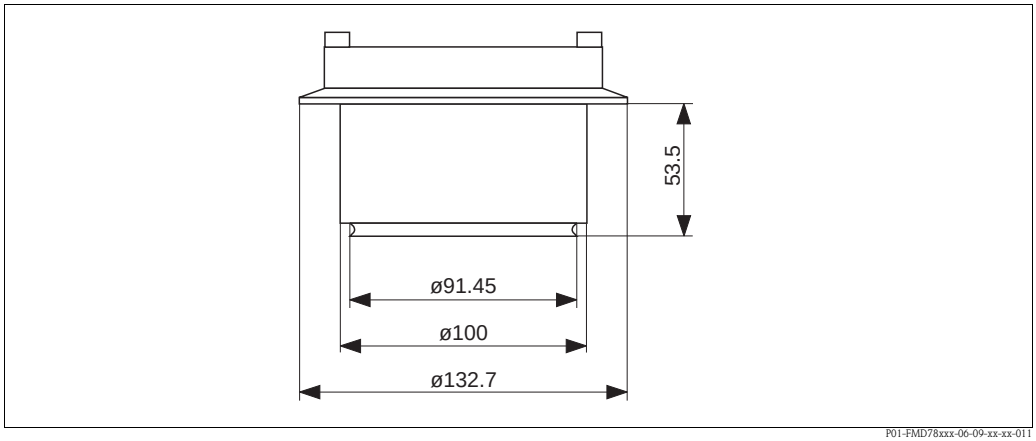

Process connection FMD78, surface roughness of the surfaces in contact with the media $R_a \leq 0.8\,\mu m$ (31.5 µin) as standard. Lower surface roughness on request.

Version	Material	Weight of two diaphragm seals [kg]
WH	AISI 316L	5

Process connections FMD78 with diaphragm seal (continued)

Taper adapter with coupling nut, DIN 11851 (dairy fitting)

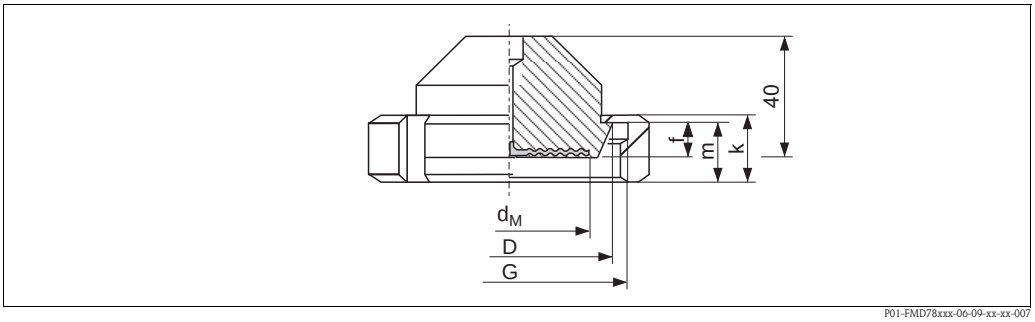

Process connection FMD78, material AISI 316L, surface roughness of the surfaces in contact with the media $R_a \leq 0.8\,\mu m$ (31.5 µin) as standard. Lower surface roughness on request.

	Taper adapter				Slotted nut			Diaphragm seal	
Version	**Nominal diameter**	**Nominal pressure**	**Diameter** **D** [mm]	**Adapter height** **f** [mm]	**Thread** **G**	**Height** **k** [mm]	**Height** **m** [mm]	**Max. diameter of the process isolating diaphragm** **d_M** [mm]	**Weight of two diaphragm seals** [kg]
MR	DN 50	PN 25	68.5	11	Rd 78 x 1/6"	22	19	52	2.2
MS	DN 65	PN 25	86	12	Rd 95 x 1/6"	25	21	66	4.0
MT	DN 80	PN 25	100	12	Rd 110 x 1/4"	30	26	81	5.1

Process connections FMD78 with diaphragm seal (continued)

EN/DIN flanges, connection dimensions as per EN 1092-1/DIN 2527
JIS flanges, connection dimensions as per JIS B 2220 BL

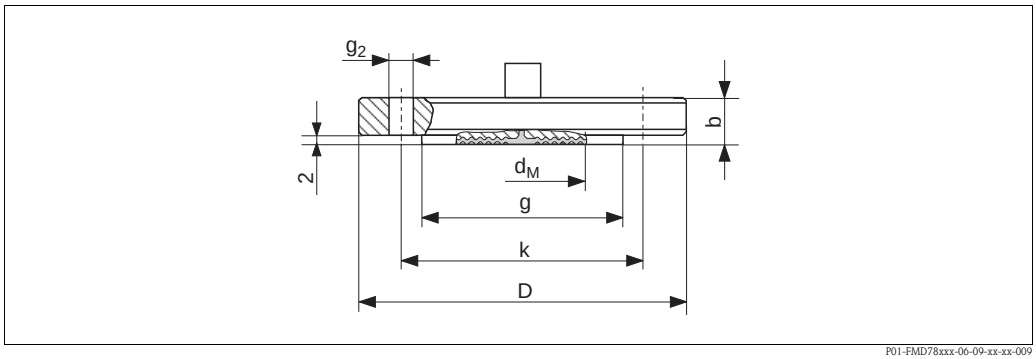

Process connection FMD78, EN/DIN or JIS flange, material AISI 316L

	EN/DIN flange [1]						Boltholes			Diaphragm seal	
Version	**Nominal diameter**	**Nominal pressure**	**Shape [2]**	**Diameter** **D** [mm]	**Thickness** **b** [mm]	**Raised face** **g** [mm]	**Quantity**	**Diameter** **g_2** [mm]	**Hole circle** **k** [mm]	**Max. diameter of the process isolating diaphragm** **d_M** [mm]	**Weight of two diaphragm seals** [kg]
B3	DN 50	PN 10-40	B1 (D)	165	20	102	4	18	125	59	6.0
B5	DN 80	PN 10-40	B1 (D)	200	24	138	8	18	160	89	10.5
BT	DN 100	PN 10-16	B1 (C)	220	20	–	8	18	180	89	9.5
B6	DN 100	PN 25-40	B1 (D)	235	24	162	8	22	190	89	13.3

1) The roughness of the surface in contact with the media, including the sealing surface of the flanges (all standards) made of Hastelloy C, Monel or tantalum, is Ra <0.8 µm (31.5 µin). Lower surface roughness on request.

2) Designation as per DIN 2527 in brackets

	JIS flange [1]					Boltholes			Diaphragm seal	
Version	**Nominal diameter**	**Nominal pressure**	**Diameter** **D** [mm]	**Thickness** **b** [mm]	**Raised face** **g** [mm]	**Quantity**	**Diameter** **g_2** [mm]	**Hole circle** **k** [mm]	**Max. diameter of the process isolating diaphragm** **d_M** [mm]	**Weight of two diaphragm seals** [kg]
KF	50 A	10 K	155	16	96	4	19	120	59	4.6
KL	80 A	10 K	185	18	127	8	19	150	89	7.0
KH	100 A	10 K	210	18	151	8	19	175	89	9.4

1) The roughness of the surface in contact with the media, including the sealing surface of the flanges (all standards) made of Hastelloy C, Monel or tantalum, is Ra <0.8 µm (31.5 µin). Lower surface roughness on request.

Process connections FMD78 with diaphragm seal (continued)

ANSI flanges, connection dimensions as per ANSI B 16.5, raised face RF

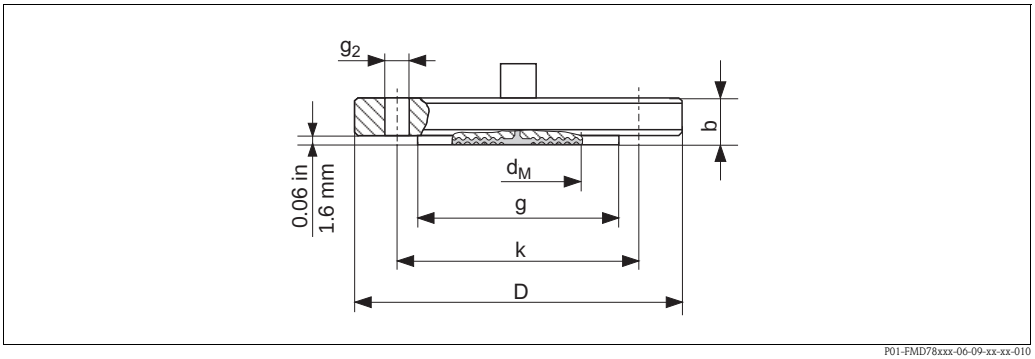

Process connection FMD78, ANSI flange, material AISI 316/AISI 316L

	Flange [1]					Boltholes			Diaphragm seal	
Version	**Nominal diameter**	**Class** [lb/ sq.in]	**Diameter** **D** [in (mm)]	**Thickness** **b** [in (mm)]	**Raised face** **g** [in (mm)]	**Quantity**	**Diameter** g_2 [in (mm)]	**Hole circle** **k** [in (mm)]	**Max. diameter of the process isolating diaphragm** d_M [in (mm)]	**Weight of two diaphragm seals** [kg]
AF	2	150	6 (152.4)	0.75 (19.1)	3.62 (91.9)	4	0.75 (19.1)	4.75 (120.7)	2.32 (59)	5.2
AR	2	300	6.5 (165.1)	0.88 (22.5)	3.62 (91.9)	8	0.75 (19.1)	5 (127)	2.32 (59)	6.8
AG	3	150	7.5 (190.5)	0.94 (23.9)	5 (127)	4	0.75 (19.1)	6 (152.4)	3.50 (89)	10.2
AS	3	300	8.25 (209.5)	1.12 (28.6)	5 (127)	8	0.88 (22.4)	6.62 (168.1)	3.50 (89)	14
AH	4	150	9 (228.6)	0.94 (23.9)	6.19 (157.2)	8	0.75 (19.1)	7.5 (190.5)	3.50 (89)	14.4
AT	4	300	10 (254)	1.25 (31.8)	6.19 (157.2)	8	0.88 (22.4)	7.88 (200.1)	3.50 (89)	23.4

1) The roughness of the surface in contact with the media, including the sealing surface of the flanges (all standards) made of Hastelloy C, Monel or tantalum, is Ra <0.8 µm (31.5 µin). Lower surface roughness on request.

Process connections FMD78 with diaphragm seal (continued)

ANSI flanges with extended diaphragm seal, connection dimensions as per ANSI B 16.5, raised face RF

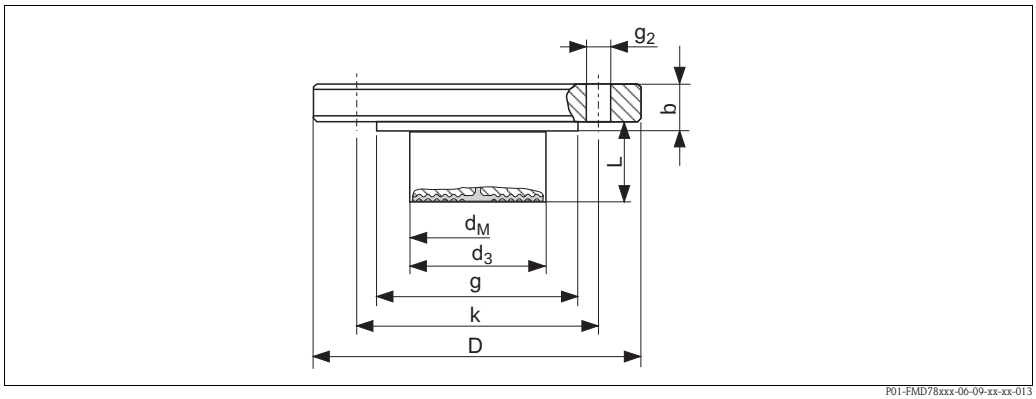

Process connection FMD78, ANSI flange, material AISI 316/AISI 316L

	Flange [1]							Boltholes			Diaphragm seal	
Version	**Nominal diameter**	**Class** [lb/sq.in]	**Diameter** **D** [in (mm)]	**Thickness** **b** [in (mm)]	**Raised face** **g** [in (mm)]	**Extended diaphragm seal length** **L** [in (mm)]	**Extended diaphragm seal diameter** **d_3** [in (mm)]	**Quantity**	**Diameter** **g_2** [in (mm)]	**Hole circle** **k** [in (mm)]	**Max. diameter of the process isolating diaphragm** **d_M** [in (mm)]	**Weight of two diaphragm seals** [kg]
J4	3	150	7.5 (190.5)	0.94 (23.9)	5 (127)	2 (50.8)	2.99 (76)	4	0.75 (19.1)	6 (152.4)	2.83 (72)	12
						4 (101.6)						13.2
						6 (152.4)						14.3
						8 (203.6)						15.4
J5	4	150	9 (228.6)	0.94 (23.9)	6.19 (157.2)	2 (50.8)	3.7 (94)	8	0.75 (19.1)	7.5 (190.5)	3.50 (89)	17.3
						4 (101.6)						19.8
						6 (152.4)						22.3
						8 (203.6)						24.8

1) The roughness of the surface in contact with the media, including the sealing surface of the flanges (all standards) made of Hastelloy C, Monel or tantalum, is Ra <0.8 µm (31.5 µin). Lower surface roughness on request.

Wall and pipe mounting with mounting bracket or separate housing

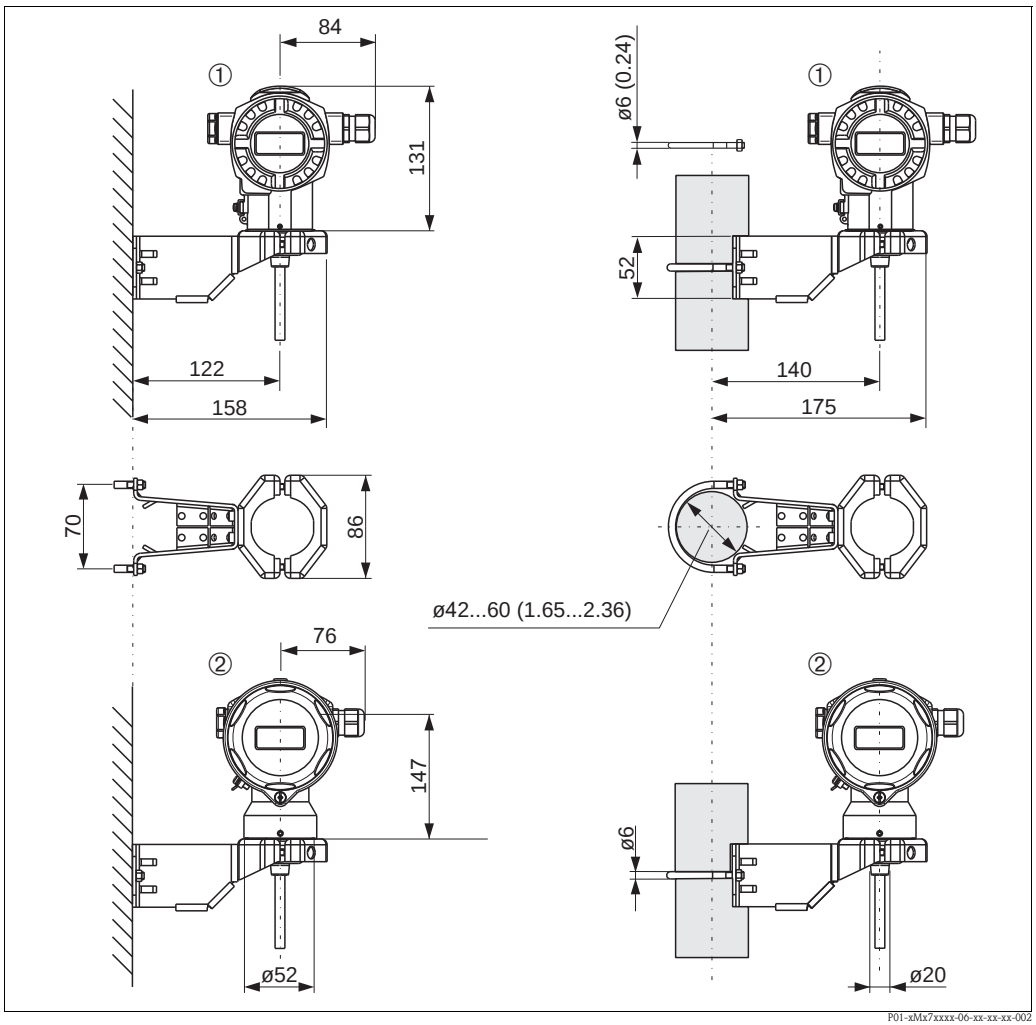

① *Dimensions of T14 housing, optional display on the side. For the weight, see the following section.*

② *Dimensions of T17 housing, optional display on the side. For the weight, see the following section.*

Weight

Housing

	T14		T15	T17	Separate housing
	Aluminum	AISI 316L	Aluminum	AISI 316L	
With electronic insert and display	1.2 kg (2.65 lbs)	2.1 kg (4.63 lbs)	1.8 kg (3.97 lbs)	1.2 kg (2.65 lbs)	Weight of housing + 0.5 kg (1.10 lbs). Weight of sensor + 0.5 kg (1.10 lbs).
With electronic insert without display	1.1 kg (2.43 lbs)	2.0 kg (4.41 lbs)	1.7 kg (3.75 lbs)	1.1 kg (2.43 lbs)	

Process connections

- Process connections PMD70 with ceramic process isolating diaphragms: → 🗎 37 ff
- Process connections PMD75 with metal process isolating diaphragms: → 🗎 39 ff
- Process connection FMD76 with ceramic process isolating diaphragms: → 🗎 42 ff
- Process connections FMD77 with diaphragm seal, low-pressure side: → 🗎 44
- Process connections FMD77 with diaphragm seal, high-pressure side: → 🗎 45 ff
- Process connections FMD78 with diaphragm seal: → 🗎 51 ff

Material (not wetted)

Housing

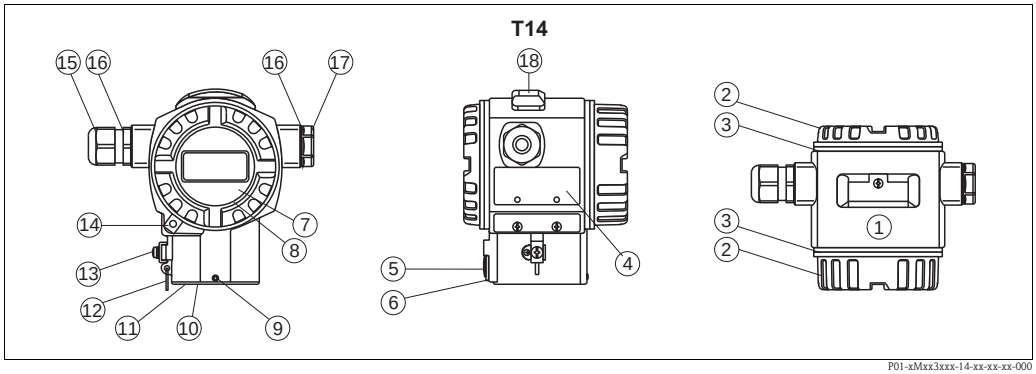

Front view, left-hand side view, top view

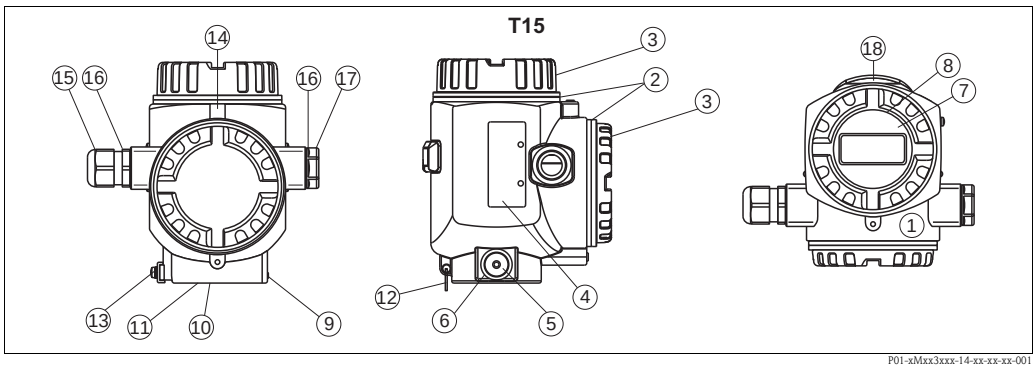

Front view, left-hand side view, top view

Item number	Component part	Material
1	T14 and T15 housing, RAL 5012 (blue)	■ Die-cast aluminum with protective powder-coating on polyester base ■ Thread coating: Heat-curing lubricant varnish
	T14 housing	■ Precision casting AISI 316L (1.4435) ■ Thread coating: Heat-curing lubricant varnish
2	Cover, RAL 7035 (gray)	Die-cast aluminum with protective powder-coating on polyester base
	Cover	Precision casting AISI 316L (1.4435)
3	Cover seal T14	EPDM or FVMQ
	Cover seal T15	EPDM
4	Nameplates	AISI 304 (1.4404)
5	Pressure compensation filter	AISI 316L (1.4404) and PBT-FR
6	Pressure compensation filter, O-ring	VMQ or EPDM
7	Sight glass	Mineral glass
8	Sight glass seal	Silicone (VMQ)
9	Screw	A4
10	Sealing ring	EPDM
11	Snap ring	PA66-GF25
12	Snap ring for nameplates	AISI 304 (1.4301)/ AISI 316 (1.4401
13	External ground terminal	AISI 304 (1.4301)
14	Cover clamp	Clamp AISI 316L (1.4435, screw A4
15	Cable gland	Polyamide (PA) or CuZn nickel-plated
16	Seal of cable gland and blind plug	Silicone (VMQ)
17	Blind plug	PBT-GF30 FR, for dust ignition-proof: AISI 316L (1.4435)
18	External operation (keys and key cover), RAL 7035 (gray)	Polycarbonate PC-FR, screw A4

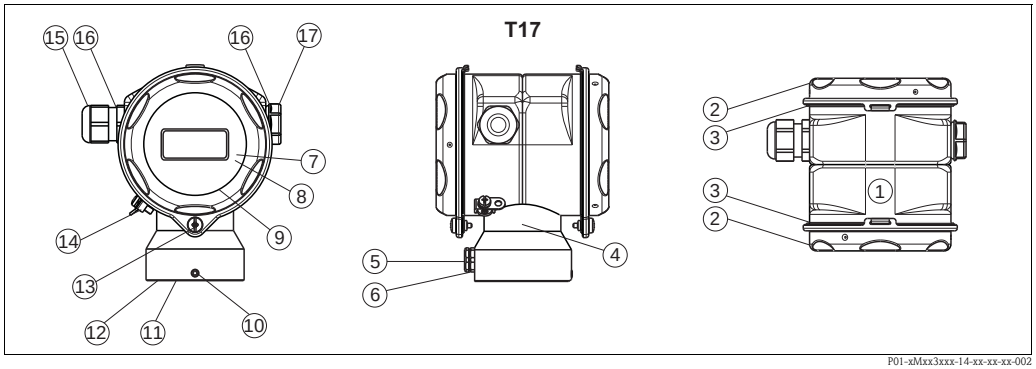

Front view, left-hand side view, top view

Item number	Component part	Material
1	T17 housing	AISI 316L (1.4404)
2	Cover	
3	Cover seal	EPDM
4	Nameplates	Lasered
5	Pressure compensation filter	AISI 316L (1.4404) and PBT-FR
6	Pressure compensation filter, O-ring	VMQ or EPDM
7	Sight glass for non-hazardous area, ATEX Ex ia, NEPSI Zone 0/1 Ex ia, IECEx Zone 0/1 Ex ia, FM NI, FM IS, CSA IS	Polycarbonate (PC)
8	Sight glass for ATEX 1/2 D, ATEX 1/3 D, ATEX 1 GD, ATEX 1/2 GD, ATEX 3 G, FM DIP, CSA dust ignition-proof	Mineral glass
9	Sight glass seal	EPDM
10	Screw	A2-70
11	Sealing ring	EPDM
12	Snap ring	PA6
13	Screw	A4-50
14	External ground terminal	AISI 304 (1.4301)
15	Cable gland	Polyamide PA, for dust ignition-proof: CuZn nickel-plated
16	Seal of cable gland and blind plug	Silicone (VMQ)
17	Blind plug	PBT-GF30 FR, for dust ignition-proof: AISI 316L (1.4435)

Connecting parts

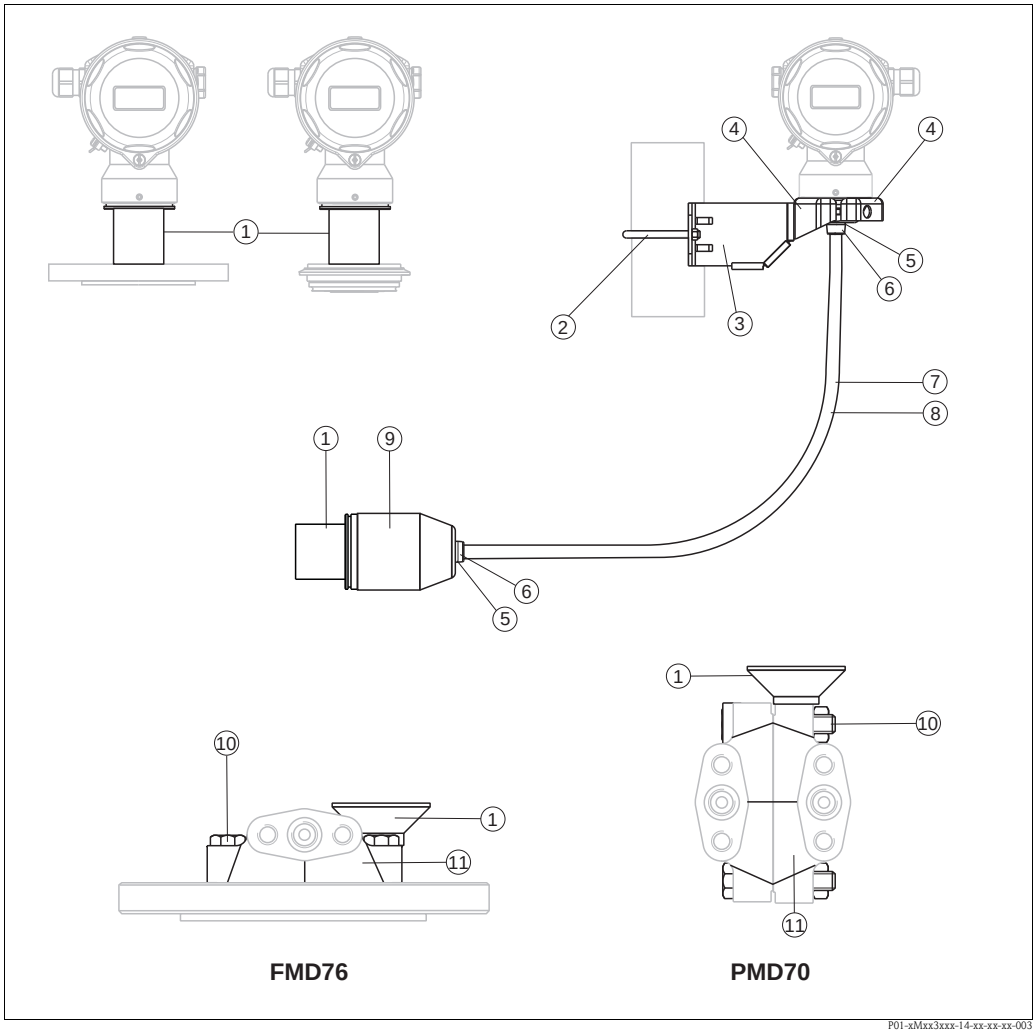

Front view, left-hand side view, top view

Item number	Component part	Material
1	Connection between the housing and process connection	AISI 316L (1.4404)
2	Mounting bracket	Bracket AISI 316L (1.4404)
3		Screw and nuts A4-70
4		Half-shells: AISI 316L (1.4404)
5	Seal for cable from separate housing	EPDM
6	Gland for cable from separate housing	AISI 316L (1.4404)
7	PE cable for separate housing	Abrasion-proof cable with strain-relief Dynema members; shielded using aluminum-coated film; insulated with polyethylene (PE-LD), black; copper wires, twisted, UV-resistant
8	FEP cable for separate housing	Abrasion-proof cable; shielded using galvanized steel wire netting; insulated with fluorinated ethylene propylene (FEP), black; copper wires, twisted, UV-resistant
9	Process connection adapter for separate housing	AISI 316L (1.4404)
10	Screw and nuts	PMD70: Hex.-headed bolt DIN 931-M10x50-A2-70 or A4/hex.-headed nut DIN 934-M10-A4-70
		FMD76: Screw, cyl. DIN 912-M10x 30-A4-70
11	Side flange	AISI 316L (1.4404)

Measuring cell body material: AISI 316L (1.4404)

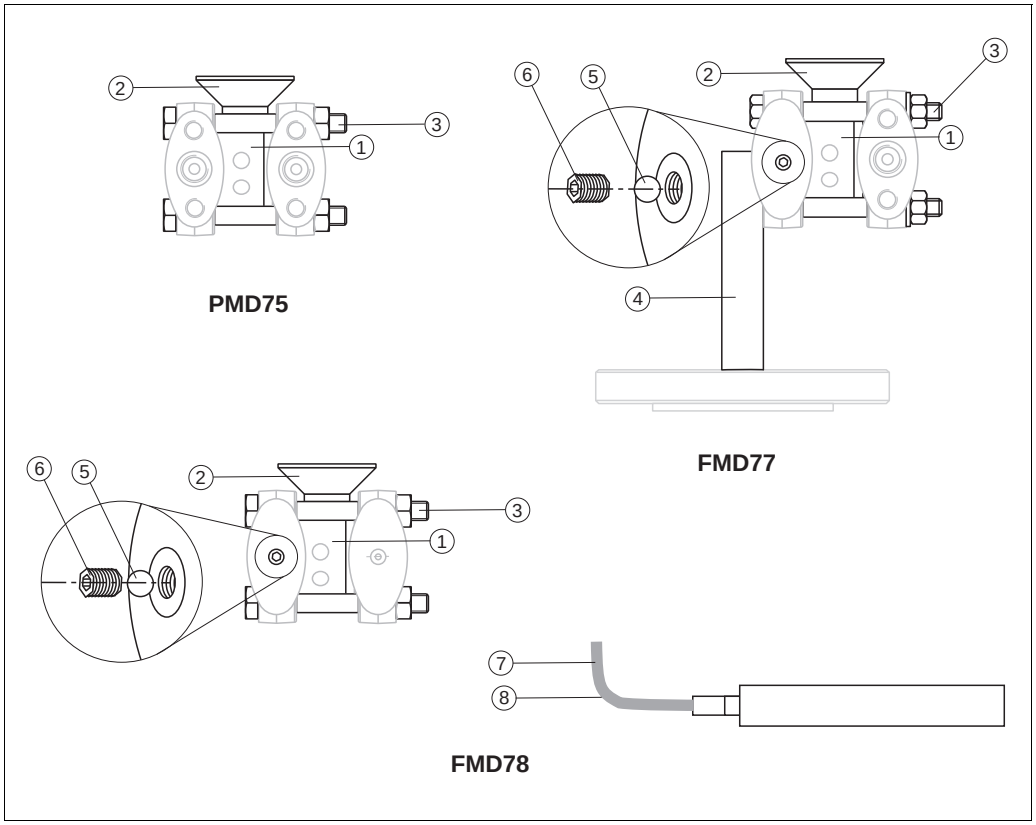

P01-xMxx3xxx-14-xx-xx-xx-004

Item number	Component part	Material
1	Measuring cell body	AISI 316L (1.4404)
2	Connection between the housing and process connection	AISI 316L (1.4404)
3	Screw and nuts	PMD75 PN 160: Hex.-headed bolt DIN 931-M12x90-A4-70/hex.-headed nut DIN 934-M12-A4-70 PMD75 PN 420: Hex.-headed bolt ISO 4014-M12x90-A4/hex.-headed nut ISO 4032-M12-A4-bs
		FMD77, FMD78: Hex.-headed bolt DIN 931-M12x 90-A4-70/hex.-headed nut DIN 934-M12 -A4-70
4	U-bracket	AISI 304 (1.4301)
5	Bearing	DIN 5401 (1.3505)
6	Setscrew	DIN 915 M 6x8 A2-70
7	Capillary	AISI 316 Ti (1.4571)
8	Protective hose for capillary	AISI 304 (1.4301)

Measuring cell body material: AISI 304 (1.4301)

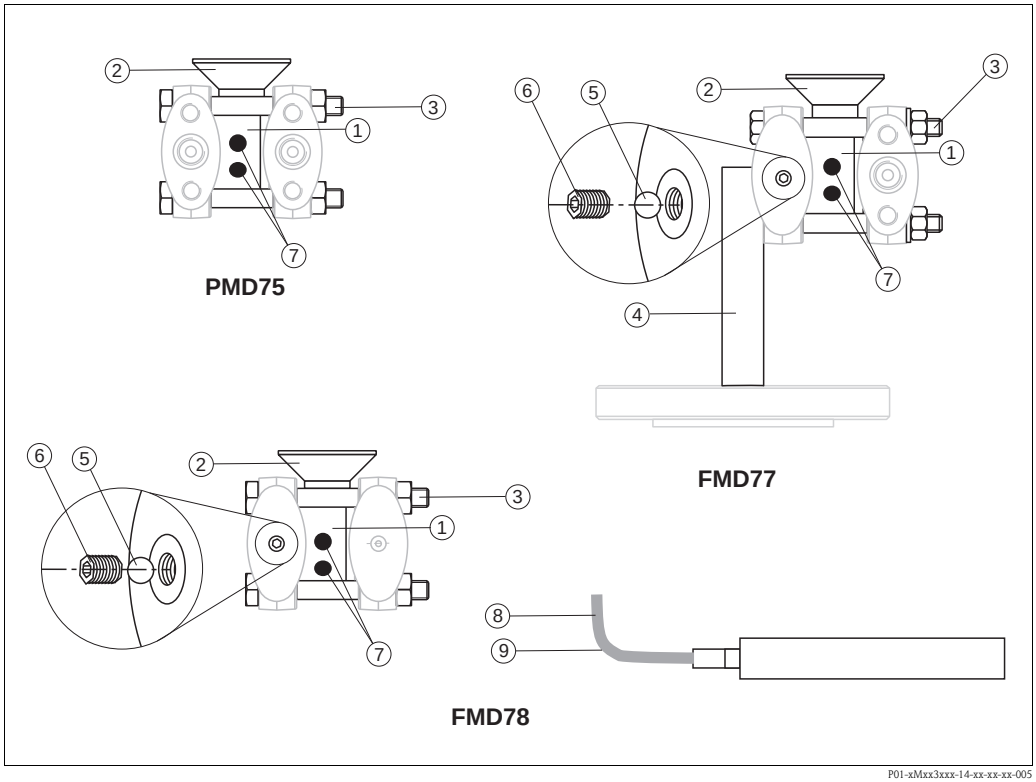

P01-xMxx3xxx-14-xx-xx-xx-005

Item number	Component part	Material
1	Measuring cell body	AISI 304 (1.4301)
2	Connection between the housing and process connection	AISI 304 (1.4301)
3	Screw and nuts	PMD75 PN 160: Hex.-headed bolt DIN 931-M12x90-A2-70 or A4/hex.-headed nut DIN 934-M12-A2-70 or A4 PMD75 PN 420: Hex.-headed bolt ISO 4014-M12x90-A4/hex.-headed nut ISO 4032-M12-A4-bs
		FMD77, FMD78: Hex.-headed bolt DIN 931-M12x 90-A2-70 or A4/hex.-headed nut DIN 934-M12 -A2-70 or A4
4	U-bracket	AISI 304 (1.4301)
5	Bearing	DIN 5401 (1.3505)
6	Setscrew	DIN 915 M 6x8 A2-70
7	Blind plug	PA 6.6
8	Capillary	AISI 316 Ti (1.4571)
9	Protective hose for capillary	AISI 304 (1.4301)

Material (wetted)

Note!
Process-wetted device components are listed in the "Mechanical construction" (→ 36) and "Ordering information" (→ 80) sections.

TSE Certificate of Suitability (Transmissible Spongiform Encephalopathy)

The following applies to all process wetted device components:
- They do not contain any materials derived from animals.
- No additives or operating materials derived from animals are used in production or processing.

Process connections

- "Clamp connections" and "Hygienic connections" (see also "Ordering information" section): AISI 316L (DIN/EN material number 1.4435)
- Endress+Hauser supplies DIN/ EN process connections with threaded connections made of stainless steel as per AISI 316L (DIN/EN material number 1.4404 (AISI 316) or 14435). With regard to their stability-temperature property, the materials 1.4404 and 1.4435 are grouped together under 13E0 in EN 1092-1: 2001 Tab.18. The chemical composition of the two materials can be identical.
- Endress+Hauser supplies DIN/EN stainless steel flanges as per AISI 316L (DIN/ EN material number 1.4404 or 14435). With regard to their stability-temperature property, the materials 1.4404 and 1.4435 are grouped together under 13E0 in EN 1092-1: 2001 Tab.18. The chemical composition of the two materials can be identical.
- Side flanges: 316L, C 22.8 cink-plated or Alloy C
  Side flanges made out of C22.8 are zinc-plated. Endress+Hauser recommends to use side flanges made out of 316L for applications with water.

Process isolating diaphragm

PMD70	PMD75	FMD76	FMD77	FMD78
Al2O3 (aluminum oxide ceramic)	AISI 316L	Al2O3 (aluminum oxide ceramic)	AISI 316L	AISI 316L
	Alloy C 276 (2.4819)		Alloy C 276	Alloy C 276
	Monel		Monel	Monel
	Tantalum		Tantalum	Tantalum
	Alloy C 276 with gold-rhodium coating		AISI 316L with gold-rhodium coating	AISI 316L with gold-rhodium coating
			AISI 316L with 0.09 mm PTFE foil (not for vacuum applications)	AISI 316L with 0.09 mm PTFE foil (not for vacuum applications)

Seals

See Ordering information → 80 ff

Filling oil

PMD70	PMD75	FMD76	FMD77	FMD78
■ 25 mbar (0.375 psi) and 100 mbar (1.5 psi) measuring cell: silicone oil ■ 500 mbar (7.5 psi) and 3000 mbar (45 psi) measuring cell: mineral oil ■ For oxygen gas applications: inert oil (Voltalef 1A)	■ Silicone oil. ■ For oxygen gas applications: inert oil (halocarbon 6.3)	■ 25 mbar (0.375 psi) and 100 mbar (1.5 psi) measuring cell: silicone oil ■ 500 mbar (7.5 psi) and 3000 mbar (45 psi) measuring cell: mineral oil ■ For oxygen gas applications: inert oil (Voltalef 1A)	■ Silicone oil ■ Vegetable oil ■ Low-temperature oil ■ High-temperature oil ■ Inert oil	Silicone oil. For oxygen gas applications: inert oil (halocarbon 6.3)

Human interface

Operating elements

Onsite display (optional)

A 4-line liquid crystal display (LCD) is used for display and operation. The onsite display shows measured values, dialog text as well as fault and notice messages in plain text, thereby supporting the user in every stage of operation. The display of the device can be turned in 90° steps.
Depending on the installation position of the device, this makes it easy to operate the device and read the measured value.

Functions:
- 8-digit measured value display including sign and decimal point, bar graph for
  - 4 to 20 mA HART as current display
  - PROFIBUS PA as graphic display of the standardized value of the AI Block
  - FOUNDATION Fieldbus as graphic display of the transducer output.
- Simple and complete menu guidance thanks to separation of the parameters into several levels and groups.
- Menu guidance up to 8 languages
- Each parameter is given a 3-digit ID number for easy navigation.
- Option for configuring the display according to individual requirements and preferences, such as language, alternating display, display of other measured values such as sensor temperature, contrast setting.
- Comprehensive diagnostic functions (fault and warning message, peak-hold indicators, etc.).
- Rapid and safe commissioning with the Quick Setup menus.

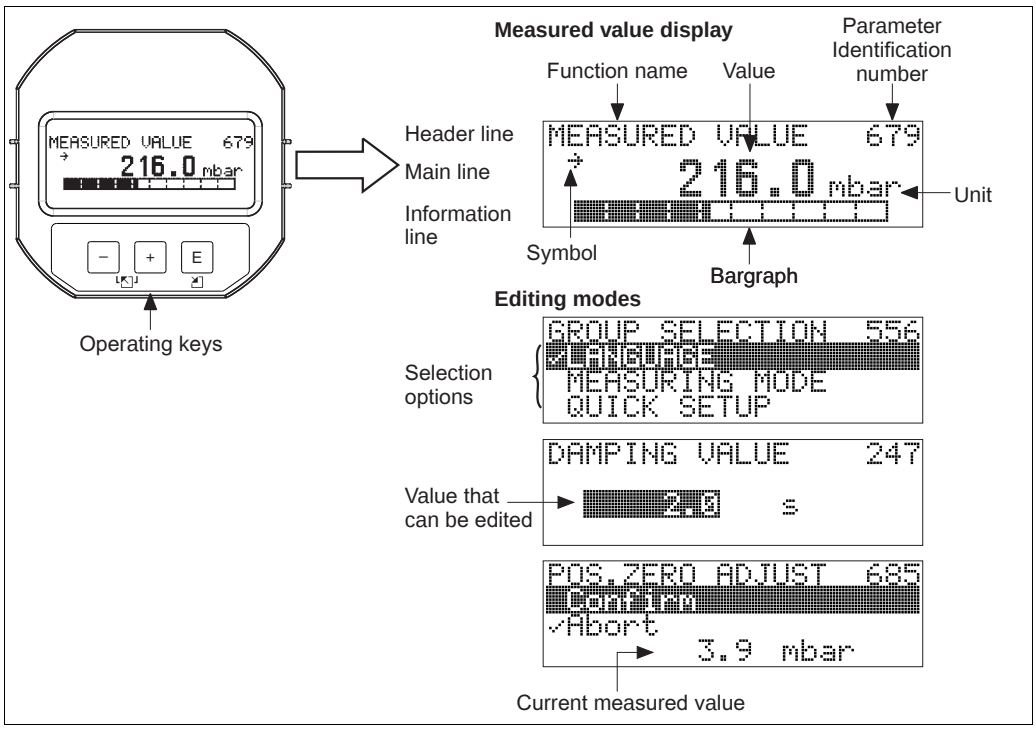

P01-xxxxxxxx-07-xx-xx-en-011

Operating elements

Operating keys on the exterior of the device

With the T14 housing (aluminum or stainless steel), the operating keys are located either outside of the housing, under the protection cap or inside on the electronic insert. With the T17 housing (stainless steel), the operating keys are located inside the housing on the electronic insert.
In addition, devices with an onsite display and a 4 to 20 mA HART or PROFIBUS PA electronic insert have operating keys on the onsite display.

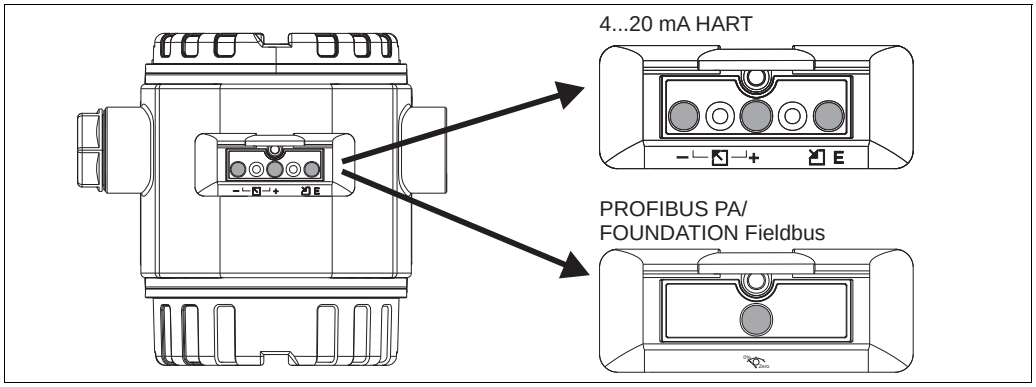

P01-PMx7xxxx-19-xx-xx-xx-038

The operating keys located externally on the device work on the Hall sensor principle. As a result, no additional openings are required in the device. This guarantees:
- Complete protection against environmental influences such as moisture and contamination.
- Simple operation without any tools.
- No wear.

Operating keys and elements located internally on the electronic insert

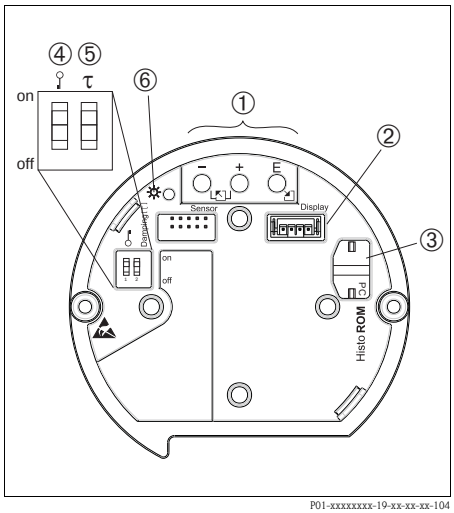

P01-xxxxxxxx-19-xx-xx-xx-104

Electronic insert HART

1 *Operating keys*
2 *Slot for optional display*
3 *Slot for optional HistoROM®/M-DAT*
4 *DIP-switch for locking/unlocking parameters relevant to the measured values*
5 *DIP-switch for damping on/off*
6 *Green LED to indicate value being accepted*

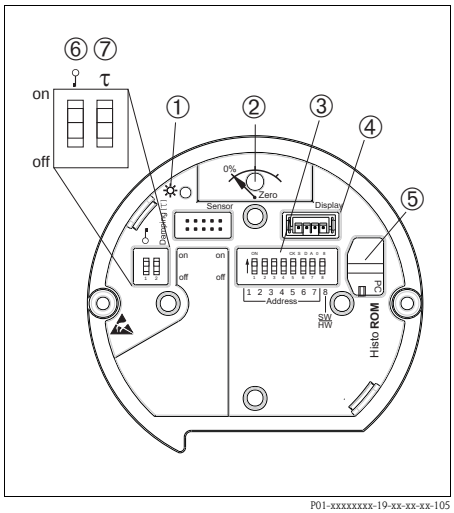

P01-xxxxxxxx-19-xx-xx-xx-105

Electronic insert PROFIBUS PA

1 *Green LED to indicate value being accepted*
2 *Key for position adjustment and device reset*
3 *DIP-switch for bus address*
4 *Slot for optional display*
5 *Slot for optional HistoROM®/M-DAT*
6 *DIP-switch for locking/unlocking parameters relevant to the measured values*
7 *DIP-switch for damping on/off*

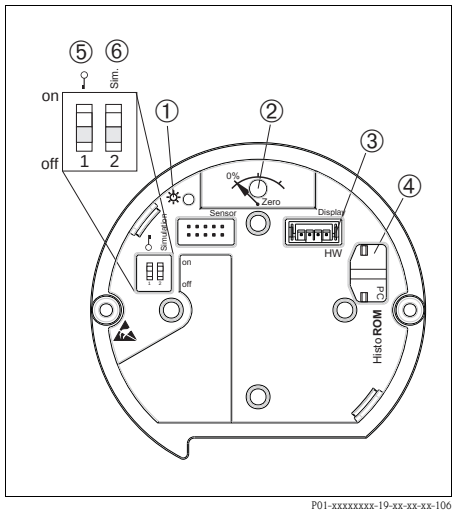

P01-xxxxxxxx-19-xx-xx-xx-106

Electronic insert FOUNDATION Fieldbus

1 *Green LED to indicate value being accepted*
2 *Key for position adjustment and device reset*
3 *Slot for optional display*
4 *Slot for optional HistoROM®/M-DAT*
5 *DIP-switch for locking/unlocking parameters relevant to the measured values*
6 *DIP-switch for simulation mode on/off*

Local operation

Function	External operation (operating keys, optional, not T17 housing)	Internal operation (electronic insert)	Display (optional)
Position adjustment (zero point correction)	X	X	X
Setting lower-range value and upper-range value – reference pressure present at the device	X (HART only)	X (HART only)	X
Device reset	X	X	X
Locking and unlocking parameters relevant to the measured value	---	X	X
Value acceptance indicated by green LED	X	X	X
Switching damping on and off	---	X (HART and PA only)	X
Setting bus address (PA)	---	X	X
Switching simulation mode on and off (FOUNDATION Fieldbus)	---	X	X

Remote operation

Depending on the position of the write protection switch on the device, all software parameters are accessible.

HART

Remote operation via:
- FieldCare (see "Hardware and software for onsite and remote operation" section → 🗎 69 ff) with ommubox FXA195 (see "Hardware and software for onsite and remote operation" section → 🗎 69)
- Field Xpert SFX100 (see "Hardware and software for onsite and remote operation" section → 🗎 69)

PROFIBUS PA

Remote operation via:
- FieldCare (see "Hardware and software for onsite and remote operation" section → 🗎 69 ff)
  - Profiboard: For connecting a PC to PROFIBUS
  - Proficard: For connecting a laptop to PROFIBUS

FOUNDATION Fieldbus

Remote operation via:
- Use an FF-configuration program for example NI-FBUS Configurator, to
  - connect devices with "FOUNDATION Fieldbus signal" into an FF-network
  - set FF-specific parameters

  Operation with NI-FBUS Configurator:
  The NI-FBUS Configurator is an easy-to-use graphical environment for creating linkages, loops and a schedule based on the fieldbus concept.
  You can use the NI-FBUS Configurator to configure a fieldbus network as follows:
  - Set block and device tags
  - Set device addresses
  - Create and edit function block control strategies (function block applications)
  - Configure vendor-defined function and transducer blocks
  - Create and edit schedules
  - Read and write to function block control strategies (function block applications)
  - Invoke Device Description (DD) methods
  - Display DD menus
  - Download a configuration
  - Verify a configuration and compare it to a saved configuration
  - Monitor a downloaded configuration
  - Replace a virtual device by a real device
  - Save and print a configuration
- Field Xpert SFX100 (see "Hardware and software for onsite and remote operation" section → 🗎 69)

Note!

For further information please contact your local Endress+Hauser Sales Center.

Hardware and software for onsite and remote operation

Commubox FXA195

For intrinsically safe HART communication with FieldCare via the USB interface. For details refer to TI404F/00/EN.

Commubox FXA291

The Commubox FXA291 connects Endress+Hauser field devices with a CDI interface (=Endress+Hauser Common Data Interface) to the USB interface of a personal computer or a notebook. For details refer to TI405C/07/EN.

Note!
For the following Endress+Hauser devices you need the "ToF adapter FXA291" as an additional accessory:

- Cerabar S PMC71, PMP7x
- Deltabar S PMD7x, FMD7x
- Deltapilot S FMB70

ToF adapter FXA291

The ToF adapter FXA291 connects the Commubox FXA291 with devices of the ToF platform, pressure equipment and Gammapilot via the USB interface of a personal computer or a notebook. For details refer to KA271F.

Field Xpert SFX100

Field Xpert is an industrial PDA with integrated 3.5" touchscreen from Endress+Hauser based on Windows Mobile. It communicates via wireless with the optional VIATOR Bluetooth modem or wireless via WiFi and Endress+Hauser's Fieldgate FXA520. Field Xpert also works as a stand-alone device for asset management applications. For details, refer to BA00060S/04/EN.

HistoROM®/M-DAT (optional)

HistoROM®/M-DAT is a memory module which can be attached to every electronic insert. The HistoROM®/M-DAT can be retrofitted at any stage (order number: 52027785).

Your benefits

- Quick and safe commissioning of the same measuring points by copying the configuration data of one transmitter to another transmitter.
- Reliable process monitoring thanks to cyclical recording of pressure and sensor temperature measured values.
- Simple diagnosis by recording diverse events such as alarms, configuration changes, counters for measuring range undershoot and overshoot for pressure and temperature as well as user limit overshoot and undershoot for pressure and temperature etc.
- Analysis and graphic evaluation of the events and process parameters via software (contained in scope of supply).

HistoROM®/M-DAT can be ordered via feature 100 "Additional option 1" or feature 110 "Additional option 2" or as a spare part. → 🗎 80 ff. A CD with an Endress+Hauser operating program is also included in the scope of delivery.
You can copy data from one transmitter to another transmitter when operating a FOUNDATION Fieldbus device via an FF configuration program. You need the Endress+Hauser FieldCare operating program and the Commubox FXA291 service interface and the ToF adapter FXA291 to be able to access the data and events saved in the HistoROM®/M-DAT.

FieldCare

FieldCare is an Endress+Hauser asset management tool based on FDT technology. With FieldCare, you can configure all Endress+Hauser devices as well as devices from other manufacturers that support the FDT standard.

FieldCare supports the following functions:
- Configuration of transmitters in offline and online mode
- Loading and saving device data (upload/download)
- HistoROM®/M-DAT analysis
- Documentation of the measuring point

Connection options:
- HART via Commubox FXA195 and the USB port on a computer
- PROFIBUS PA via segment coupler and PROFIBUS interface card
- Service interface with Commubox FXA291 and ToF adapter FXA291 (USB).

For further information see → www.endress.com

Planning instructions, diaphragm seal systems

Note!
The performance and the permitted range of application of a diaphragm seal system depend on the process isolating diaphragm used, the filling oil, the coupling, the unit design and on the process and ambient conditions present in the individual application.
To help you select the right diaphragm seal system for your applications, Endress+Hauser provides its customers with the free "Applicator Sizing Diaphragm Seal" tool, which is available on DVD or at "www.endress.com/applicator".

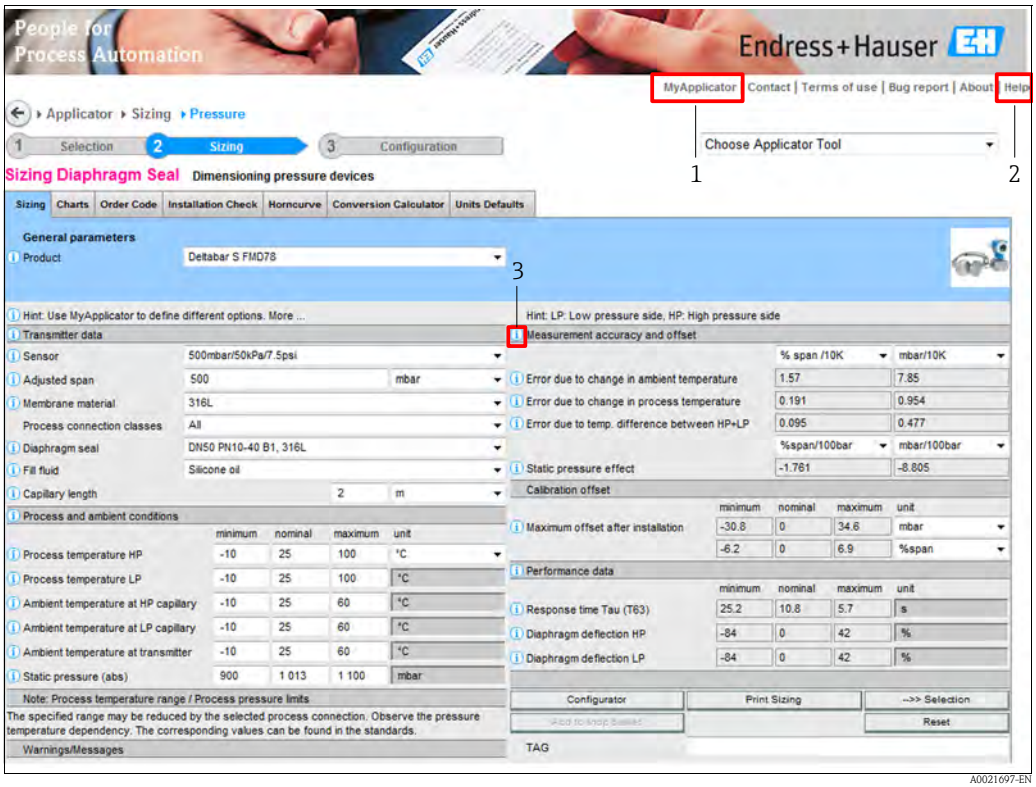

1 *My Applicator – Configuration of the Applicator settings*

2 *Applicator help*

3 *Mouse-Over help – slide with the mouse pointer over these fields and get short informations*

For more detailed information or the layout of the optimum diaphragm seal solution for your application, please contact your local Endress+Hauser Sales Center.

Applications

Diaphragm seal systems should be used if the process and the device should be separated. Diaphragm seal systems offer clear advantages in the following instances:
- In the case of extreme process temperatures
- For aggressive media
- In the case of process media that crystallize
- In the case of corrosive or highly various process media or process media with solids content
- In the case of heterogeneous and fibrous process media
- If extreme measuring point cleaning is necessary, or for very humid mounting locations
- If the measuring point is exposed to severe vibrations
- For mounting locations that are difficult to access

Design and operation mode

Diaphragm seals are separating equipment between the measuring system and the process media.

A diaphragm seal system consists of:
- A diaphragm seal in a one-sided system, e.g. FMD77 or two diaphragm seals in a two-sided system, e.g. FMD78
- One capillary tube or two capillary tubes
- Fill fluid
- A differential pressure transmitter

The process pressure acts via the process isolating diaphragm of the diaphragm seal on the liquid-filled system, which transfers the process pressure via the capillary tube onto the sensor of the differential pressure transmitter.
Endress+Hauser delivers all diaphragm seal systems as welded versions. The system is hermetically sealed, which ensures the highest reliability.

The diaphragm seal determines the application range of the system by:
- The process isolating diaphragm diameter
- The process isolating diaphragm stiffness and material
- The design (oil volume)

Diameter of the process isolating diaphragm

The greater the diameter of the process isolating diaphragm (less stiff), the smaller the temperature effect on the measurement result.

Process isolating diaphragm stiffness

The stiffness depends on the diameter of the process isolating diaphragm, the material, any existing coating and the thickness and shape of the process isolating diaphragm. The process isolating diaphragm thickness and the shape are determined by the design. The stiffness of a process isolating diaphragm of a diaphragm seal influences the temperature operating range and the measuring error caused by temperature effects.

Capillary

Diaphragm seals are used with the following capillary internal diameters as standard:

- ≤ DN 50: 1 mm (0.04 in)
- > DN 50: 2 mm (0.08 in)

The capillary tube influences the thermal change, the ambient temperature operating range and the response time of a diaphragm seal system as a result of its length and internal diameter.

Filling oil

When selecting the filling oil, the process and ambient temperature as well as the operating pressure are of crucial importance. Observe the temperatures and pressures during commissioning and cleaning. A further selection criterion is the compatibility of the filling oil with the requirements of the process media. For this reason, only filling oils that are harmless to health are used in the food industry, such as vegetable oil or silicone oil.
→ See also the following section "Diaphragm seal filling oils".
The filling oil used influences the thermal change, the temperature operating range of a diaphragm seal system and the response time. A temperature change results in a volume change of the filling oil. The volume change is dependent on the expansion coefficient and the volume of the filling oil at calibration temperature (constant in the range: +21 to +33°C (+70 to 91°F)).
For example, the filling oil expands in the event of a temperature increase. The additional volume presses against the process isolating diaphragm of a diaphragm seal. The stiffer a diaphragm is, the greater its return force, which counteracts a volume change and acts on the measuring cell together with the operating pressure, thus shifting the zero point.

Differential pressure transmitter

The differential pressure transmitter influences the temperature operating range, the T_K zero point and the response time as a result of the volume of its side flange and as a result of its volume change. The volume change is the volume that has to be shifted to pass through the complete measuring range.
Differential pressure transmitters from Endress+Hauser are optimized with regard to the minimum volume change and side flange.

Diaphragm seal filling oils

Version [1]	Filling oil	Permissible temperature range [2] at 0.05 bar (0.725 psi) ≤ p_{abs} ≤ 1 bar (14.5 psi)	Permissible temperature [2] range at p_{abs} ≥ 1 bar (14.5 psi)	Density [g/cm³] / [SGU]	Viscosity [mm²/s] / [cSt] at 25 °C (77 °F)]	Coefficient of thermal expansion [1/K]	Notes
FMD77: A FMD78: A, 1	Silicone oil	–40 to +180°C (-40 to +356 °F)	–40 to +250°C (-40 to +482 °F)	0.96	100	0.00096	Suitable for foods FDA 21 CFR 175.105
FMD77: V FMD78: C, 3	High-temperature oil	–10 to +200°C (+14 to +392 °F)	–10 to +400°C (+14 to 752 °F)	1.07	37	0.0007	High temperatures
FMD77: F FMD78: D, 4	Inert oil	–40 to +80°C (-40 to +176 °F)	–40 to +175°C (-40 to +347 °F)	1.87	27	0.000876	Oil for ultrapure gas and oxygen applications
FMD77: D FMD78: B, 2	Vegetable oil	–10 to +120°C (+14 to +248 °F)	(+14 to +392 °F)	0.94	9.5	0.00101	Suitable for foods FDA 21 CFR 172.856
FMD77: L FMD78: E, 5	Low-temperature oil	–70 to +80°C (-94 to +176 °F)	–70 to +180°C (-94 to +356 °F)	0.92	4.4	0.00108	Low temperatures

1) Version for feature 90 in the order code

2) Observe temperature limits of the device (→ 34) and the system (→ 71).

Operating temperature range

The operating temperature range of a diaphragm seal system depends on the fill fluid, capillary length and internal diameter, process temperature and oil volume of the diaphragm seal.
The range of application can be extended by using a fill fluid with a smaller expansion coefficient and a shorter capillary.

Response time

The viscosity of the filling oil, the capillary length and the capillary internal diameter influence the frictional resistance. The greater the frictional resistance, the longer the response time.
Furthermore, the volume change of the measuring cell influences the response time. The lower the volume change of the measuring cell, the less filling oil has to be shifted in the diaphragm seal system.

The following diagram shows typical response times (T90) for the various filling oils dependent on the measuring cell and the capillary internal diameter. The values given are in seconds per meter of capillary length and must be multiplied by the actual length of the capillary. The response time of the transmitter must also be taken into consideration.

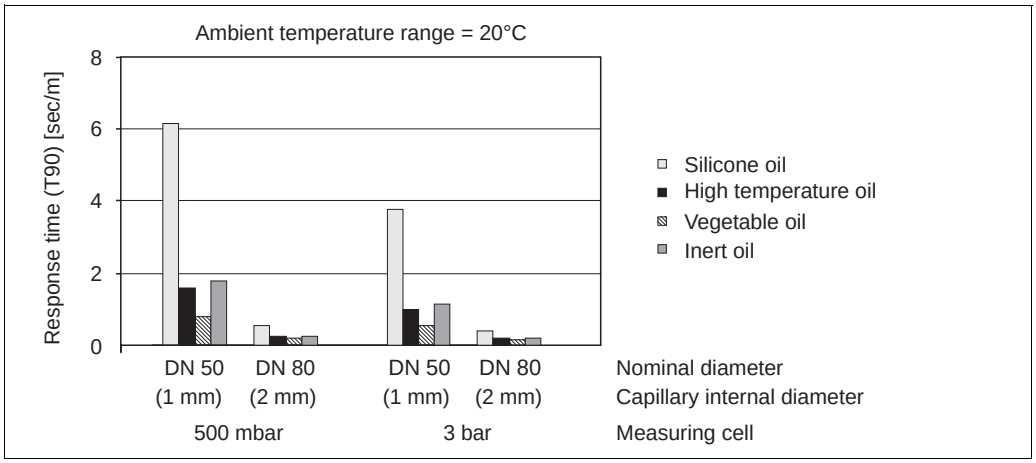

P01-FMD78xxx-05-xx-xx-en-000

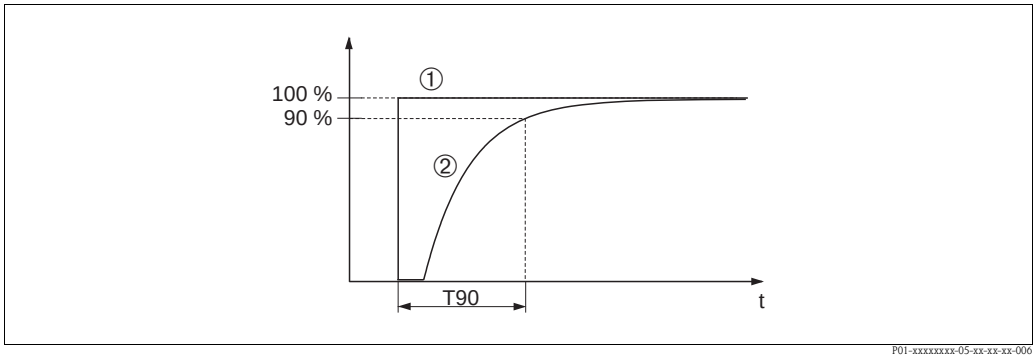

Presentation of the response time (T90%)

1 Pressure increase
2 Output signal

Minimize response time by	Comments
Larger capillary internal diameter	The temperature effect increases with increasing diameter.
Shorter capillaries	–
Filling oil with lower viscosity	– Observe compatibility of the filling oil with the process media. – Observe the filling oil operating limits.

Cleaning instructions

- Endress+Hauser offer flushing rings as accessories to clean process isolating diaphragms without taking the transmitters out of the process.
  For further information please contact your local Endress+Hauser Sales Center.
- We recommend you perform CIP (cleaning in place (hot water)) before SIP (sterilization in place (steam)) for pipe diaphragm seals.
  A frequent use of sterilization in place (SIP) will increase the stress on the process isolating diaphragm. Under unfavorable circumstances in the long term view we cannot exclude that a frequent temperature change could lead to a material fatigue of the process isolating diaphragm and possibly to a leakage.

Installation instructions

Diaphragm seal systems

- The diaphragm seal together with the transmitter form a closed, calibrated system, which is filled through ports in the diaphragm seal and in the measuring system of the transmitter. These ports are sealed and must not be opened.
- In the case of devices with diaphragm seals and capillaries, the zero point shift caused by the hydrostatic pressure of the filling liquid column in the capillaries must be taken into account when selecting the measuring cell. If a measuring cell with a small measuring range is selected, the sensor nominal range can be overdriven as a result of position adjustment. → See the following diagram and the following example.
- For devices with a capillary a suitable fastening device (mounting bracket) is recommended.
- When using a mounting bracket, sufficient strain relief must be allowed for in order to prevent the capillary bending down (capillary bending radius ≥ 100 mm (3.94 in)).
- The temperature and length of both capillaries should be the same when using two-sided diaphragm seal systems.

Selecting the measuring cell (observe the hydrostatic pressure of the filling liquid column in the capillaries!)

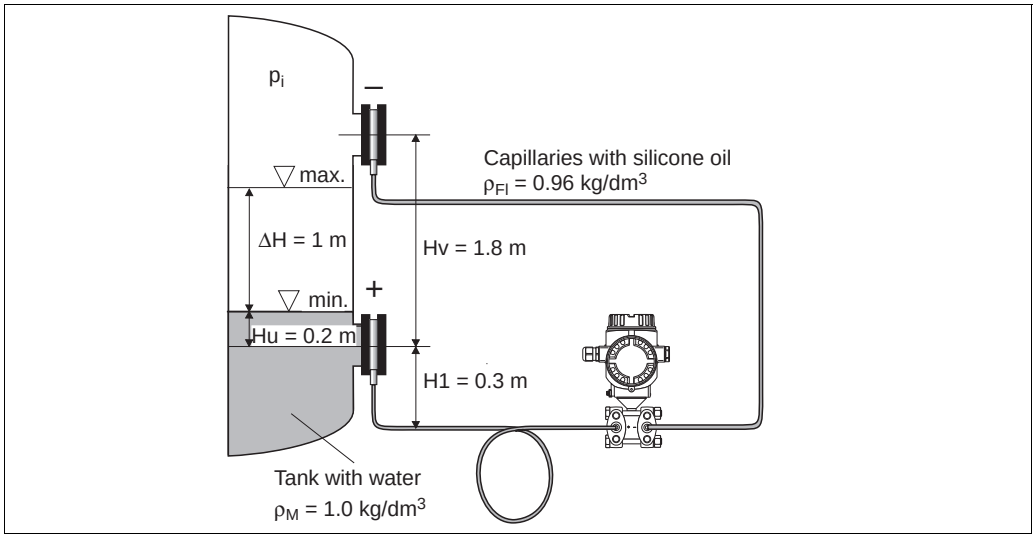

P01-FMD78xxx-11-xx-xx-en-004

Pressure on the negative side of the differential pressure transmitter (p_-) when the tank is empty (min. level)

$$p_- = p_{Hv} + p_{H1} = Hv \bullet \rho_{Fl} \bullet g + H1 \bullet \rho_{Fl} \bullet g + p_i$$

$$= 1.8\ m \bullet 0.96 \frac{kg}{dm^3} \bullet 9.81 \frac{m}{s^2} + 0.3\ m \bullet 0.96 \frac{kg}{dm^3} \bullet 9.81 \frac{m}{s^2} + p_i$$

$$= 197.77\ mbar + p_i$$

Pressure on the positive side of the differential pressure transmitter (p_+) when the tank is empty (min. level)

$$p_+ = p_{Hu} + p_{H1} = Hu \bullet \rho_M \bullet g + H1 \bullet \rho_{Fl} \bullet g + p_i$$

$$= 0.2\ m \bullet 1 \frac{kg}{dm^3} \bullet 9.81 \frac{m}{s^2} + 0.3\ m \bullet 0.96 \frac{kg}{dm^3} \bullet 9.81 \frac{m}{s^2} + p_i$$

$$= 47.87\ mbar + p_i$$

Differential pressure at the transmitter ($\Delta p_{Transmitter}$) when the tank is empty

$$\Delta p_{Transmitter} = p_+ - p_-$$

$$= 47.87\ mbar - 197.77\ mbar$$

$$= -149.90\ mbar$$

Result:
If the tank were full, a differential pressure of –51.80 mbar (-0.762 psi) would be present at the differential pressure transmitter. When the tank is empty, a differential pressure of –149.90 mbar (2.2485 psi) is present. Therefore, a 500 mbar (7.5 psi) measuring cell is required for this application.

Capillary

In order to obtain more precise measurement results and to avoid a defect in the device, mount the capillaries as follows:
- vibration-free (in order to avoid additional pressure fluctuations)
- not in the vicinity of heating or cooling lines
- insulate if the ambient temperature is below or above the reference temperature
- with a bending radius of ≥ 100 mm (3.94 in).

Vacuum applications

For applications under vacuum, Endress+Hauser recommends mounting the pressure transmitter below the lower diaphragm seal. This prevents a vacuum load of the diaphragm seal caused by the presence of filling oil in the capillaries.

When the pressure transmitter is mounted above the lower diaphragm seal, the maximum height difference H1 in accordance with the following illustration must not be exceeded. The maximum height difference is dependent on the density of the filling oil and the smallest ever pressure that is permitted to occur at the diaphragm seal on the positive side (empty tank), see the following illustration, on the right.

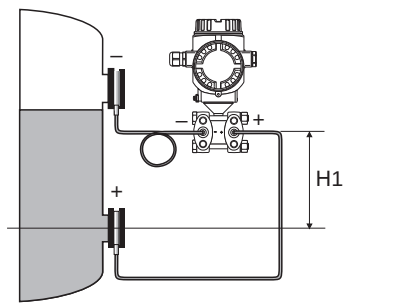

P01-FMD7xxxx-11-xx-xx-xx-001

Installation above the lower diaphragm seal

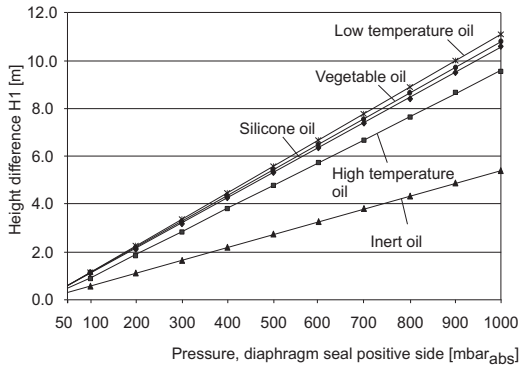

P01-FMD7xxxx-05-xx-xx-en-002

Diagram of maximum installation height above the lower diaphragm seal for vacuum applications dependent on the pressure at the diaphragm seal on the positive side

Heat insulation – FMD77

The FMD77 must only be insulated up to a certain height. The maximum permitted insulation height is indicated on the devices and applies to an insulation material with a heat conductivity ≤ 0.04 W/(m x K) and to the maximum permitted ambient and process temperature (→ see table below). The data were determined under the most critical application "quiescent air".

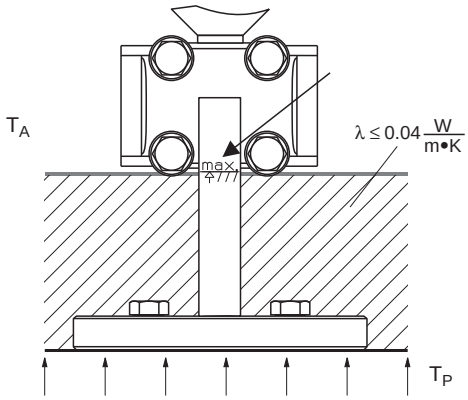

P01-FMD77xxxx-11-xx-xx-xx-000

Maximum permitted insulation height

Certificates and approvals

CE mark

The device meets the legal requirements of the relevant EC directives.
Endress+Hauser confirms that the device has been successfully tested by applying the CE mark.

Ex approvals

- ATEX
- FM
- CSA
- NEPSI
- IECEx
- GOST on request
- Also combinations of different approvals

All explosion protection data are given in separate documentation which is available upon request. The Ex documentation is supplied as standard with all devices approved for use in explosion hazardous areas.
→ 🗎 97, "Safety Instructions" and "Installation/Control Drawings" sections.

Suitability for hygienic processes

- Materials in contact with food are in conformity to framework regulation EG No. 1935/2004.
- The Deltabar S is suitable for use in hygienic processes.
  Overview of suitable process connections from → 🗎 93 ff.
  Many versions meet the requirements of 3A-Sanitary Standard No. 74 and are certified by the EHEDG.
  Suitable fittings and seals must be used to ensure hygiene-compliant design according to the specifications of 3A and EHEDG.
  Note!
  The gap-free connections can be cleaned without residue using the usual cleaning methods.

Marine certificate

- GL: FMD76, FMD78, PMD70, PMD75
- ABS: FMD76, FMD78, PMD70, PMD75

Functional Safety SIL / IEC 61508 Declaration of Conformity (optional)

The Deltabar S with 4 to 20 mA output signal has been developed to IEC 61508 standard. The device can be used for flow, level and differential pressure monitoring up to SIL 3.
For a detailed description of the safety functions with Deltabar S, settings and characteristic quantities for functional safety, please refer to the "Functional Safety Manual - Deltabar S" SD00189P.
For devices with SIL / IEC 61508 Declaration of Conformity see → 🗎 80 ff, feature 100 "Additional option 1" and feature 110 "Additional option 2" version E "SIL / IEC 61508, Declaration of Conformity".

Overfill prevention

WHG. See "Ordering information" → 🗎 80 (see also ZE00259P/00/DE).

CRN approvals

Some device versions have CRN approval. For a CRN-approved device, a CRN-approved process connection (→ 🗎 80 ff, feature 70 "Process connection") has to be ordered with a CSA approval (→ 🗎 80 ff, feature 10 "Approval"). These devices are fitted with a separate plate bearing the registration number 0F10524.5C.

Pressure Equipment Directive (PED)

The devices PMD70, PMD75, FMD76, FMD77 and FMD78 correspond to Article 3 (3) of the EC directive 97/23/EC (Pressure Equipment Directive) and have been designed and manufactured according to good engineering practice.

The following also applies:
– FMD78 with pipe diaphragm seal ≥ 1.5"/PN40:
  Suitable for stable gases in group 1, category II
– PMD75, PN 420
  Suitable for stable gases in group 1, category I

Standards and guidelines

DIN EN 60770 (IEC 60770):
Transmitters for use in industrial-process control systems
Part 1: Methods for performance evaluation

DIN 16086:
Electrical pressure measuring instruments, pressure sensors, pressure transmitters, pressure measuring instruments, concepts, specifications on data sheets

EN 61326-X:
EMC product family standard for electrical equipment for measurement, control and laboratory use.

Classification of process sealing between electrical systems and (flammable or combustible) process fluids in accordance with ANSI/ISA 12.27.01

Endress+Hauser devices are designed in accordance with ANSI/ISA 12.27.01. allowing the user to waive the use and save the cost of installing external secondary process seals in the conduit as required by the process sealing sections of ANSI/NFPA 70 (NEC) and CSA 22.1 (CEC). These instruments comply with the North American installation practice and provide a very safe and cost-saving installation for pressurized applications with hazardous fluids. Please refer to the following table for the seal class assigned (single seal or dual seal):

Device	Approval	Single seal MWP
PMD70, FMD76	CSA C/ US IS	100 bar (1500 psi)
PMD75	CSA C/ US IS, XP	420 bar (6300 psi)
FMD77	CSA C/ US IS, XP	160 bar (2400 psi)
FMD78	CSA C/ US IS, XP	160 bar (2400 psi)

Further information can be found in the control drawings of the relevant devices.

Ordering information

PMD70

This overview does not mark options which are mutually exclusive.

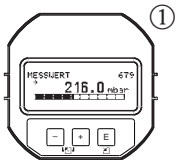

10	Approval:
A	For non-hazardous areas
1	ATEX II 1/2 G Ex ia IIC T6
6	ATEX II 1/2 G Ex ia IIC T6, Overfill prevention WHG
2	ATEX II 1/2 D
4	ATEX II 1/3 D
8	ATEX II 1 GD Ex ia IIC T6
3	ATEX II 1/2 GD Ex ia IIC T6
7	ATEX II 3 G Ex nA II T6
S	FM IS, Class I, II, III Division 1, Groups A – G; NI Class I Division 2, Groups A – D; AEx ia
Q	FM DIP, Class II, III Division 1, Groups E – G
R	FM NI, Class I, Division 2, Groups A – D
U	CSA IS, Class I, II, III Division 1, Groups A – G; Class I Division 2, Groups A – D, Ex ia
W	CSA Class II, III Division 1, Groups E – G (Dust-Ex)
E	Combined certificates ATEX II Ex ia + FM IS + CSA IS ATEX II 1/2G Ex ia IIC T6 + FM/CSA IS Class I, II, III Division 1 Group A - G
H	NEPSI Ex ia IIC T6
I	IECEx Zone 0/1 Ex ia IIC T6

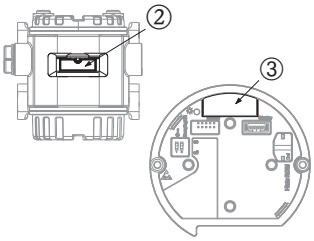

20		Output; Operation:
	A	4 to 20 mA HART, SIL operation outside, LCD (→ see Fig. ①, ②)
	B	4 to 20 mA HART, SIL operation inside, LCD (→ see Fig. ①, ③)
	C	4 to 20 mA HART, SIL operation inside (→ see Fig. ③)
	D	4 to 20 mA HART, SIL operation outside, Li=0, LCD (→ see Fig. ①, ②)
	E	4 to 20 mA HART, SIL operation inside, Li=0, LCD (→ see Fig. ①, ③)
	F	4 to 20 mA HART, SIL operation inside Li=0, (→ see Fig. ③)
	M	PROFIBUS PA, operation outside, LCD (→ see Fig. ①, ②)
	N	PROFIBUS PA, operation inside, LCD (→ see Fig. ①, ③)
	O	PROFIBUS PA, operation inside (→ see Fig. ③)
	P	FOUNDATION Fieldbus, operation outside, LCD (→ see Fig. ①, ②)
	Q	FOUNDATION Fieldbus, operation inside, LCD (→ see Fig. ①, ③)
	R	FOUNDATION Fieldbus, operation inside (→ see Fig. ③)

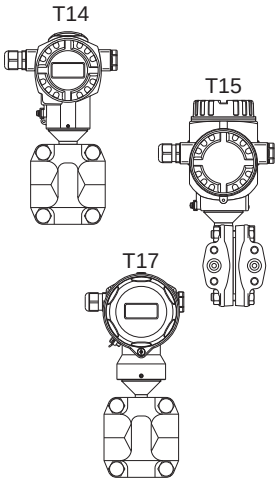

30		Housing; Cable entry; Protection:
	A	Aluminum T14 housing, optional display on the side, IP 66/67/NEMA 4X/ 6P, Gland M 20x1.5
	B	Aluminum T14 housing, optional display on the side, IP 66/67/NEMA 4X/ 6P, Thread G 1/2
	C	Aluminum T14 housing, optional display on the side, IP 66/67/NEMA 4X/ 6P, Thread 1/2 NPT
	D	Aluminum T14 housing, optional display on the side, IP 66/67/NEMA 4X/ 6P, M12x1 PA plug
	E	Aluminum T14 housing, optional display on the side, IP 66/67/NEMA 4X/ 6P, 7/8" FF plug
	F	Aluminum T14 housing, optional display on the side, IP 65/NEMA 4X, Han7D plug, 90°
	J	Aluminum T15 housing, optional display on the top, IP 66/67/NEMA 4X/ 6P, Gland M 20x1.5
	K	Aluminum T15 housing, optional display on the top, IP 66/67/NEMA 4X/ 6P, Thread G 1/2
	L	Aluminum T15 housing, optional display on the top, IP 66/67/NEMA 4X/ 6P, Thread 1/2 NPT
	M	Aluminum T15 housing, optional display on the top, IP 66/67/NEMA 4X/ 6P, M12x1 PA plug
	N	Aluminum T15 housing, optional display on the top, IP 66/67/NEMA 4X/ 6P, 7/8" FF plug
	P	Aluminum T15 housing, optional display on the top, IP 65/NEMA 4X, Han7D plug, 90°
	1	AISI 316L T14 housing, optional display on the side, IP 66/67/NEMA 4X/ 6P, Gland M 20x1.5
	2	AISI 316L T14 housing, optional display on the side, IP 66/67/NEMA 4X/ 6P, Thread G 1/2
	3	AISI 316L T14 housing, optional display on the side, IP 66/67/NEMA 4X/ 6P, Thread 1/2 NPT
	4	AISI 316L T14 housing, optional display on the side, IP 66/67/NEMA 4X/ 6P, M 12x1 PA plug
	5	AISI 316L T14 housing, optional display on the side, IP 66/67/NEMA 4X/ 6P, 7/8" FF plug
	6	AISI 316L T14 housing, optional display on the side, IP 65/NEMA 4X, Han7D plug, 90°
	7	AISI 316L T14 housing, optional display on the side, IP66/67 NEMA6P; FVMQ; M20
	8	AISI 316L T14 housing, optional display on the side, IP66/67 NEMA6P; FVMQ; NPT1/2
	R	T17 316L Hygiene IP66/68 NEMA6P; M20 gland, T17 = side cover
	S	T17 316L Hygiene IP66/68 NEMA6P; G1/2 thread, T17 = side cover
	T	T17 316L Hygiene IP66/68 NEMA6P; NPT1/2 thread, T17 = side cover
	U	T17 316L Hygiene IP66/67 NEMA6P; M12 plug, T17 = side cover
	V	T17 316L Hygiene IP66/68 NEMA6P; 7/8" plug, T17 = side cover
	Z	Housing: see additional specifications

40	Nominal range; PN:	
	Nominal value	**PN**
7B	25 mbar/2500 Pa/0.375 psi	10 bar/1 MPa/150 psi

40	Nominal range; PN:	
7D	100 mbar/10 kPa/1.5 psi	16 bar/1.6 MPa/240 psi
7F	500 mbar/50 kPa/7.5 psi	100 bar/10 MPa/1500 psi
7H	3 bar/300 kPa/45 psi	100 bar/10 MPa/1500 psi

PMD70 (continued)

50	Calibration; Unit:
1	Nominal range; mbar/bar
2	Nominal range; kPa/MPa
3	Nominal range; mmH_2O/mH_2O
4	Nominal range; inH_2O/ftH_2O
6	Nominal range; psi
8	Configured for Deltatop; see additional specification
B	Customer-specific; see additional specification
C	Factory calibration certificate, 5-point; see additional specification
D	DKD/DAkkS certificate; see additional specification
E	Customised pressure; see additional specification
F	Customised level; see additional specification
G	Customised flow; see additional specification
H	Customised pressure + 5-point works calibration certificate; see additional specification
I	Customised level + 5-point works calibration certificate; see additional specification
J	Customised flow + 5-point works calibration certificate; see additional specification
K	Platinum; see additional specification
L	Platinum and factory calibration certificate, 5-point; see additional specification
M	Platinum and DKD/DAkkS certificate; see additional specification

70	Process connection; Material:
B	1/4 – 18 NPT IEC 61518, mounting: 7/16 – 20 UNF, C22.8 (CRN)
D	1/4 – 18 NPT IEC 61518, mounting: 7/16 – 20 UNF, AISI 316L (CRN)
G	1/4 – 18 NPT IEC 61518, mounting: 7/16 – 20 UNF, PVDF
U	RC 1/4 mounting: 7/16 – 20 UNF, AISI 316L (CRN)
1	1/4 – 18 NPT, mounting: PN 160: M10, C22.8 (CRN)
2	1/4 – 18 NPT, mounting: PN 160: M10, AISI 316L (CRN)

80	Seal:
A	FKM Viton
B	EPDM
D	Kalrez
E	Chemraz
1	FKM Viton, cleaned from oil and grease
2	FKM Viton, cleaned for oxygen service Note application limits pressure/temp.

100	Additional option 1:
A	Not selected
E	SIL/IEC 61508 Declaration of Conformity
B	Material test certificate for wetted components, inspection certificate as per EN 10204 3.1 acc. to specification 52005759
M	Overvoltage protection
J	Software setting, see additional spec. Min alarm current HART burst mode PV Min alarm current + HART burst mode PV
N	HistoROM/M-DAT
S	GL/ABS marine certificate
U	Mounting bracket, wall/pipe, 316L
V	Mounting on shut-off valve from above
W	Mounting on shut-off valve from below
3	Routine test with certificate, inspection certificate as per EN 10204 3.1
4	Overpressure test with certificate, inspection certificate as per EN 10204 3.1

PMD70 (continued)

110	Additional option 2:
A	Not selected
E	SIL/IEC 61508 Declaration of Conformity
B	Material test certificate for wetted components, inspection certificate as per EN 10204 3.1 acc. to specification 52005759
G	Separate housing, cable length see additional spec. + mounting bracket, wall/pipe, 316L (FM/CSA IS: for Div. 1 installation only)
K	Vent valves (2 pieces), Alloy C
M	Overvoltage protection
J	Software setting, see additional spec. Min alarm current HART burst mode PV Min alarm current + HART burst mode PV
N	HistoROM/M-DAT
R	Screws 7/16 UNF, length 1 1/2" (4 pieces) for oval flange adapter PZO
S	GL/ABS marine certificate
U	Mounting bracket for wall/pipe, AISI 316L
3	Routine test with certificate, inspection certificate as per EN 10204 3.1
4	Overpressure test with certificate, inspection certificate as per EN 10204 3.1
5	Helium leak test EN 1518 with test certificate inspection certificate as per EN 10204 3.1

850	Firmware Version:
73	02.11.zz, HART, DevRev21
74	04.00.zz, FF, DevRev07
75	04.01.zz, PROFIBUS PA, DevRev03
76	02.10.zz, HART, DevRev21
77	03.00.zz, FF, DevRev06
78	04.00.zz, PROFIBUS PA

895	Identification:
Z1	Measuring point (TAG)
Z2	Bus address

PMD70	complete order code

PMD75

This overview does not mark options which are mutually exclusive.

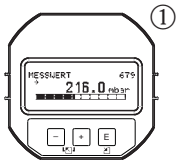

10	Approval:
A	For non-hazardous areas
1	ATEX II 1/2 G Ex ia IIC T6
6	ATEX II 1/2 G Ex ia IIC T6, Overfill prevention WHG
2	ATEX II 1/2 D
4	ATEX II 1/3 D
8	ATEX II 1 GD Ex ia IIC T6
3	ATEX II 1/2 GD Ex ia IIC T6
5	ATEX II 2 G Ex d IIC T6 Gb
7	ATEX II 3 G Ex nA II T6
S	FM IS, Class I, II, III Division 1, Groups A – G; NI Class I Division 2, Groups A – D; AEx ia
T	FM XP, Class I Division 1, Groups A – D; AEx d
Q	FM DIP, Class II, III Division 1, Groups E – G
R	FM NI, Class I, Division 2, Groups A – D
U	CSA IS, Class I, II, III Division 1, Groups A – G; Class I Division 2, Groups A – D, Ex ia
V	CSA XP, Class I Division 1, Groups B – D; Ex d
W	CSA Class II, III Division 1, Groups E – G (Dust-Ex)
G	NEPSI Exd IIC T6
H	NEPSI Ex ia IIC T6
I	IECEx Zone 0/1 Ex ia IIC T6
M	IEC Ex d IIC T6 Gb
L	TIIS Ex do IIC T6
B	Combined certificates: ATEX II 1/2 G Ex ia IIC T6 + II G Ex d IIC T6
C	Combined certificates: FM IS and XP Class I Division 1, Groups A – D
D	Combined certificates: CSA IS and XP Class I Division 1, Groups A – D
E	Combined certificates: FM/CSA IS and XP Class I Division 1, Groups A – D
F	Combined certificates: ATEX II Ex ia / Ex d + FM/CSA IS + XP; ATEX II 1/2G Ex ia IIC T6+; ATEX II 2G Ex d IIC T6+; FM/CSA IS + XP Cl.I Div.1 Gr.A-D

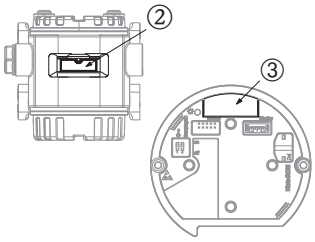

20	Output; Operation:
A	4 to 20 mA HART, SIL operation outside, LCD (→ see Fig. ①, ②)
B	4 to 20 mA HART, SIL operation inside, LCD (→ see Fig. ①, ③)
C	4 to 20 mA HART, SIL operation inside (→ see Fig. ③)
D	4 to 20 mA HART, SIL operation outside, Li=0, LCD (→ see Fig. ①, ②)
E	4 to 20 mA HART, SIL operation inside, Li=0, LCD (→ see Fig. ①, ③)
F	4 to 20 mA HART, SIL operation inside Li=0, (→ see Fig. ③)
M	PROFIBUS PA, operation outside, LCD (→ see Fig. ①, ②)
N	PROFIBUS PA, operation inside, LCD (→ see Fig. ①, ③)
O	PROFIBUS PA, operation inside (→ see Fig. ③)
P	FOUNDATION Fieldbus, operation outside, LCD (→ see Fig. ①, ②)
Q	FOUNDATION Fieldbus, operation inside, LCD (→ see Fig. ①, ③)
R	FOUNDATION Fieldbus, operation inside (→ see Fig. ③)

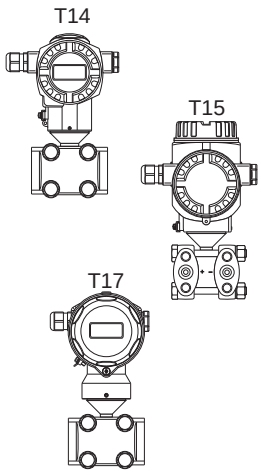

30	Housing; Cable entry; Protection:
A	Aluminum T14 housing, optional display on the side, IP 66/67/NEMA 4X/ 6P, Gland M 20x1.5
B	Aluminum T14 housing, optional display on the side, IP 66/67/NEMA 4X/ 6P, Thread G 1/2
C	Aluminum T14 housing, optional display on the side, IP 66/67/NEMA 4X/ 6P, Thread 1/2 NPT
D	Aluminum T14 housing, optional display on the side, IP 66/67/NEMA 4X/ 6P, M12x1 PA plug
E	Aluminum T14 housing, optional display on the side, IP 66/67/NEMA 4X/ 6P, 7/8" FF plug
F	Aluminum T14 housing, optional display on the side, IP 65/NEMA 4X, Han7D plug, 90°
J	Aluminum T15 housing, optional display on the top, IP 66/67/NEMA 4X/ 6P, Gland M 20x1.5
K	Aluminum T15 housing, optional display on the top, IP 66/67/NEMA 4X/ 6P, Thread G 1/2
L	Aluminum T15 housing, optional display on the top, IP 66/67/NEMA 4X/ 6P, Thread 1/2 NPT
M	Aluminum T15 housing, optional display on the top, IP 66/67/NEMA 4X/ 6P, M 12x1 PA plug
N	Aluminum T15 housing, optional display on the top, IP 66/67/NEMA 4X/ 6P, 7/8" FF plug
P	Aluminum T15 housing, optional display on the top, IP 65/NEMA 4X, Han7D plug, 90°
1	AISI 316L T14 housing, optional display on the side, IP 66/67/NEMA 4X/ 6P, Gland M 20x1.5
2	AISI 316L T14 housing, optional display on the side, IP 66/67/NEMA 4X/ 6P, Thread G 1/2
3	AISI 316L T14 housing, optional display on the side, IP 66/67/NEMA 4X/ 6P, Thread 1/2 NPT
4	AISI 316L T14 housing, optional display on the side, IP 66/67/NEMA 4X/ 6P, M 12x1 PA plug
5	AISI 316L T14 housing, optional display on the side, IP 66/67/NEMA 4X/ 6P, 7/8" FF plug
6	AISI 316L T14 housing, optional display on the side, IP 65/NEMA 4X, Han7D plug, 90°
7	AISI 316L T14 housing, optional display on the side, IP66/67 NEMA6P; FVMQ; M20
8	AISI 316L T14 housing, optional display on the side, IP66/67 NEMA6P; FVMQ; NPT1/2
R	T17 316L Hygiene IP66/68 NEMA6P; M20 gland, T17 = side cover
S	T17 316L Hygiene IP66/68 NEMA6P; G1/2 thread, T17 = side cover
T	T17 316L Hygiene IP66/68 NEMA6P; NPT1/2 thread, T17 = side cover

U	T17 316L Hygiene IP66/67 NEMA6P; M12 plug, T17 = side cover
V	T17 316L Hygiene IP66/68 NEMA6P; 7/8" plug, T17 = side cover
Z	Housing: see additional specifications

PMD75 (continued)

40 — Nominal range; Cell body material; PN:

	Nominal value	Cell body material	PN
2B	10 mbar/1 kPa/0.15 psi	AISI 316L (1.4404)	160 bar/16 MPa/2400 psi
2C	30 mbar/3 kPa/0.45 psi	AISI 316L (1.4404)	160 bar/16 MPa/2400 psi
3D	100 mbar/10 kPa/1.5 psi	AISI 316L (1.4404)	420 bar/42 MPa/6300 psi
3F	500 mbar/50 kPa/7.5 psi	AISI 316L (1.4404)	420 bar/42 MPa/6300 psi
3H	3 bar/300 kPa/45 psi	AISI 316L (1.4404)	420 bar/42 MPa/6300 psi
3L	16 bar/1,6 MPa/240 psi	AISI 316L (1.4404)	420 bar/42 MPa/6300 psi
3M	40 bar/4 MPa/600 psi	AISI 316L (1.4404)	420 bar/42 MPa/6300 psi
7B	10 mbar/1 kPa/0.15 psi	AISI 304 (1.4301)	160 bar/16 MPa/2400 psi
7C	30 mbar/3 kPa/0.45 psi	AISI 304 (1.4301)	160 bar/16 MPa/2400 psi
7D	100 mbar/10 kPa/1.5 psi	AISI 304 (1.4301)	160 bar/16 MPa/2400 psi
7F	500 mbar/50 kPa/7.5 psi	AISI 304 (1.4301)	160 bar/16 MPa/2400 psi
7H	3 bar/300 kPa/45 psi	AISI 304 (1.4301)	160 bar/16 MPa/2400 psi
7L	16 bar/1.6 MPa/240 psi	AISI 304 (1.4301)	160 bar/16 MPa/2400 psi
7M	40 bar/4 MPa/600 psi	AISI 304 (1.4301)	160 bar/16 MPa/2400 psi
8D	100 mbar/10 kPa/1.5 psi	AISI 304 (1.4301)	420 bar/42 MPa/6300 psi
8F	500 mbar/50 kPa/7.5 psi	AISI 304 (1.4301)	420 bar/42 MPa/6300 psi
8H	3 bar/300 kPa/45 psi	AISI 304 (1.4301)	420 bar/42 MPa/6300 psi
8L	16 bar/1.6 MPa/240 psi	AISI 304 (1.4301)	420 bar/42 MPa/6300 psi
8M	40 bar/4 MPa/600 psi	AISI 304 (1.4301)	420 bar/42 MPa/6300 psi

50 — Calibration; Unit:

1	Nominal range; mbar/bar
2	Nominal range; kPa/MPa
3	Nominal range; mmH_2O/mH_2O
4	Nominal range; inH_2O/ftH_2O
6	Nominal range; psi
8	Configured for Deltatop; see additional specification
B	Customer-specific; see additional specification
C	Factory calibration certificate, 5-point; see additional specification
D	DKD/DAkkS certificate; see additional specification
E	Customised pressure; see additional specification
F	Customised level; see additional specification
G	Customised flow; see additional specification
H	Customised pressure + 5-point works calibration certificate; see additional specification
I	Customised level + 5-point works calibration certificate; see additional specification
J	Customised flow + 5-point works calibration certificate; see additional specification
K	Platinum; see additional specification
L	Platinum and factory calibration certificate, 5-point; see additional specification
M	DKD/DAkkS calibration: see additional specifications. Platinum and DKD/DAkkS certificate

60 — Process isolating diaphragm material:

1	AISI 316L
2	Alloy C 276
3	Monel
5	Tantalum
6	Alloy C 276 with gold-rhodium coating

PMD75 (continued)

70	Process connection; Material:
B	1/4 – 18 NPT IEC 61518, mounting: 7/16 – 20 UNF, C22.8 (CRN), including 2 vent valves (AISI 316L)
C	1/4 – 18 NPT IEC 61518, mounting: 7/16 – 20 UNF, C22.8, side vent, including 4 locking screws and 2 vent valves (AISI 316L)
D	1/4 – 18 NPT IEC 61518, mounting: 7/16 – 20 UNF, AISI 316L (CRN), including 2 vent valves (AISI 316L)
E	1/4 – 18 NPT IEC 61518, mounting: 7/16 – 20 UNF, AISI 316L, side vent, including 4 locking screws and 2 vent valves (AISI 316L)
F	1/4 – 18 NPT IEC 61518, mounting: 7/16 – 20 UNF, Alloy C (CRN), without screws/vents
H	1/4 – 18 NPT IEC 61518, mounting: 7/16 – 20 UNF, Alloy C, side vent, without screws/vents
U	RC 1/4 mounting: 7/16 – 20 UNF, AISI 316L (CRN), including 2 vent valves (AISI 316L)
V	RC 1/4 mounting: 7/16 – 20 UNF, AISI 316L, side vent, including 4 locking screws and 2 vent valves (AISI 316L)
W	Prepared for diaphragm seal mount
1	1/4 – 18 NPT, mounting: PN 160: M10, PN 420: M12, C22.8 (CRN), including 2 vent valves (AISI 316L)
2	1/4 – 18 NPT, mounting: PN 160: M10, PN 420: M12, AISI 316L (CRN), including 2 vent valves (AISI 316L)
3	1/4 – 18 NPT, mounting: PN 160: M10, PN 420: M12, Alloy C (CRN)

80	Seal:
A	FKM Viton
B	PTFE (PN63bar/6.3MPa/1000psi)
C	PTFE (PN160bar/16MPa/2400psi)
D	PTFE (PN250bar/25MPa/3625psi)
F	NBR
K	Copper seal ring, cleaned for oxygen service
1	FKM Viton, cleaned from oil and grease
2	FKM Viton, cleaned for oxygen service Note application limits pressure/temp.
3	PTFE, cleaned for oxygen service
H	Copper seal ring

100	Additional option 1:
A	Not selected
E	SIL/IEC 61508 Declaration of Conformity
B	Material test certificate for wetted components, inspection certificate as per EN 10204 3.1 acc. to specification 52005759
C	NACE MR0175 (wetted parts)
D	Material test certificate for wetted components as per EN 10204 3.1 and NACE MR0175 material, inspection certificate as per EN 10204 acc. to specification 520108806
M	Overvoltage protection
J	Software setting, see additional spec. Min alarm current HART burst mode PV Min alarm current + HART burst mode PV
N	HistoROM/M-DAT
S	GL/ABS marine certificate
U	Mounting bracket, wall/pipe, 316L
V	Mounting on shut-off valve from above (→ see Fig. ④)
W	Mounting on shut-off valve from below (→ see Fig. ⑤)
3	Routine test with certificate, inspection certificate as per EN 10204 3.1
4	Overpressure test with certificate, inspection certificate as per EN 10204 3.1

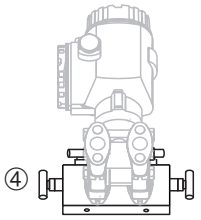

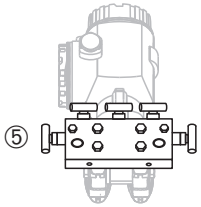

PMD75 (continued)

110	Additional option 2:
A	Not selected
E	SIL/IEC 61508 Declaration of Conformity
B	Material test certificate for wetted components, inspection certificate as per EN 10204 3.1 acc. to specification 52005759
G	Separate housing, cable length see additional spec. + mounting bracket, wall/pipe, 316L (FM/CSA IS: for Div. 1 installation only)
K	Vent valves (2 pieces), Alloy C
L	Vent valves (4 pieces), Alloy C
M	Overvoltage protection
J	Software setting, see additional spec. Min alarm current HART burst mode PV Min alarm current + HART burst mode PV
N	HistoROM/M-DAT
R	Screws 7/16 UNF, length 1 1/2" (4 pieces) for oval flange adapter PZO
S	GL/ABS marine certificate
U	Mounting bracket for wall/pipe, AISI 316L
3	Routine test with certificate, inspection certificate as per EN 10204 3.1
4	Overpressure test with certificate, inspection certificate as per EN 10204 3.1
5	Helium leak test EN 1518 with test certificate inspection certificate as per EN 10204 3.1

850	Firmware Version:
73	02.11.zz, HART, DevRev21
74	04.00.zz, FF, DevRev07
75	04.01.zz, PROFIBUS PA, DevRev03
76	02.10.zz, HART, DevRev21
77	03.00.zz, FF, DevRev06
78	04.00.zz, PROFIBUS PA

895	Identification:
Z1	Measuring point (TAG)
Z2	Bus address

PMD75	▮ ▮	complete order code

FMD76

This overview does not mark options which are mutually exclusive.

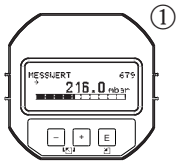

10	Approval:
A	For non-hazardous areas
1	ATEX II 1/2 G Ex ia IIC T6
6	ATEX II 1/2 G Ex ia IIC T6, Overfill prevention WHG
2	ATEX II 1/2 D Ex ia IIC T6
8	ATEX II 1 GD Ex ia IIC T6
3	ATEX II 1/2 GD Ex ia IIC T6
7	ATEX II 3 G Ex nA II T6
S	FM IS, Class I, II, III Division 1, Groups A – G; NI Class I Division 2, Groups A – D; AEx ia
R	FM NI, Class I, Division 2, Groups A – D
U	CSA IS, Class I, II, III Division 1, Groups A – G; Class I Division 2, Groups A – D, Ex ia
E	Combined certificates ATEX II Ex ia + FM IS + CSA IS ATEX II 1/2G Ex ia IIC T6 + FM/CSA IS Class I, II, III Division 1 Group A - G
H	NEPSI Ex ia IIC T6
I	IECEx Zone 0/1 Ex ia IIC T6

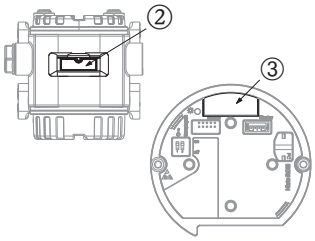

20	Output; Operation:
A	4 to 20 mA HART, SIL operation outside, LCD (→ see Fig. ①, ②)
B	4 to 20 mA HART, SIL operation inside, LCD (→ see Fig. ①, ③)
C	4 to 20 mA HART, SIL operation inside (→ see Fig. ③)
D	4 to 20 mA HART, SIL operation outside, Li=0, LCD (→ see Fig. ①, ②)
E	4 to 20 mA HART, SIL operation inside, Li=0, LCD (→ see Fig. ①, ③)
F	4 to 20 mA HART, SIL operation inside Li=0, (→ see Fig. ③)
M	PROFIBUS PA, operation outside, LCD (→ see Fig. ①, ②)
N	PROFIBUS PA, operation inside, LCD (→ see Fig. ①, ③)
O	PROFIBUS PA, operation inside (→ see Fig. ③)
P	FOUNDATION Fieldbus, operation outside, LCD (→ see Fig. ①, ②)
Q	FOUNDATION Fieldbus, operation inside, LCD (→ see Fig. ①, ③)
R	FOUNDATION Fieldbus, operation inside (→ see Fig. ③)

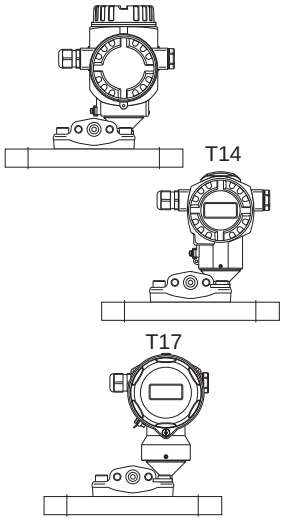

30	Housing; Cable entry; Protection:
A	Aluminum T14 housing, optional display on the side, IP 66/67/NEMA 4X/ 6P, Gland M 20x1.5
B	Aluminum T14 housing, optional display on the side, IP 66/67/NEMA 4X/ 6P, Thread G 1/2
C	Aluminum T14 housing, optional display on the side, IP 66/67/NEMA 4X/ 6P, Thread 1/2 NPT
D	Aluminum T14 housing, optional display on the side, IP 66/67/NEMA 4X/ 6P, M12x1 PA plug
E	Aluminum T14 housing, optional display on the side, IP 66/67/NEMA 4X/ 6P, 7/8" FF plug
F	Aluminum T14 housing, optional display on the side, IP 65/NEMA 4X, Han7D plug, 90°
J	Aluminum T15 housing, optional display on the top, IP 66/67/NEMA 4X/ 6P, Gland M 20x1.5
K	Aluminum T15 housing, optional display on the top, IP 66/67/NEMA 4X/ 6P, Thread G 1/2
L	Aluminum T15 housing, optional display on the top, IP 66/67/NEMA 4X/ 6P, Thread 1/2 NPT
M	Aluminum T15 housing, optional display on the top, IP 66/67/NEMA 4X/ 6P, M 12x1 PA plug
N	Aluminum T15 housing, optional display on the top, IP 66/67/NEMA 4X/ 6P, 7/8" FF plug
P	Aluminum T15 housing, optional display on the top, IP 65/NEMA 4X, Han7D plug, 90°
1	AISI 316L T14 housing, optional display on the side, IP 66/67/NEMA 4X/ 6P, Gland M 20x1.5
2	AISI 316L T14 housing, optional display on the side, IP 66/67/NEMA 4X/ 6P, Thread G 1/2
3	AISI 316L T14 housing, optional display on the side, IP 66/67/NEMA 4X/ 6P, Thread 1/2 NPT
4	AISI 316L T14 housing, optional display on the side, IP 66/67/NEMA 4X/ 6P, M 12x1 PA plug
5	AISI 316L T14 housing, optional display on the side, IP 66/67/NEMA 4X/ 6P, 7/8" FF plug
6	AISI 316L T14 housing, optional display on the side, IP 65/NEMA 4X, Han7D plug, 90°
7	AISI 316L T14 housing, optional display on the side, IP66/67 NEMA6P; FVMQ; M20
8	AISI 316L T14 housing, optional display on the side, IP66/67 NEMA6P; FVMQ; NPT1/2
R	T17 316L Hygiene IP66/68 NEMA6P; M20 gland, T17 = side cover
S	T17 316L Hygiene IP66/68 NEMA6P; G1/2 thread, T17 = side cover
T	T17 316L Hygiene IP66/68 NEMA6P; NPT1/2 thread, T17 = side cover
U	T17 316L Hygiene IP66/67 NEMA6P; M12 plug, T17 = side cover
V	T17 316L Hygiene IP66/68 NEMA6P; 7/8" plug, T17 = side cover
Z	Housing: see additional specifications

40	Nominal range; PN:	
	Nominal value	**PN**
7D	100 mbar/10 kPa/1.5 psi	16 bar/1.6 MPa/240 psi
7F	500 mbar/50 kPa/7.5 psi	100 bar/10 MPa/1500 psi
7H	3 bar/300 kPa/45 psi	100 bar/10 MPa/1500 psi

FMD76 (continued)

50	Calibration; Unit:
1	Nominal range; mbar/bar
2	Nominal range; kPa/MPa
3	Nominal range; mmH_2O/mH_2O
4	Nominal range; inH_2O/ftH_2O
6	Nominal range; psi
B	Customer-specific; see additional specification
C	Factory calibration certificate, 5-point; see additional specification
D	DKD/DAkkS certificate; see additional specification
E	Customised pressure; see additional specification
F	Customised level; see additional specification
H	Customised pressure + 5-point works calibration certificate; see additional specification
I	Customised level + 5-point works calibration certificate; see additional specification
K	Platinum; see additional specification
L	Platinum and factory calibration certificate, 5-point; see additional specification
M	DKD/DAkkS calibration: see additional specifications. Platinum and DKD/DAkkS certificate

70	Process connection low-pressure side; Material; Seal:
	Mounting: 7/16 – 20 UNF
B	1/4 – 18 NPT IEC 61518, C22.8, FKM Viton (CRN)
D	1/4 – 18 NPT IEC 61518, AISI 316L, FKM Viton (CRN)
G	1/4 – 18 NPT IEC 61518, PVDF, FKM Viton, Safety instructions, observe electrostatic charge.
K	1/4 – 18 NPT IEC 61518, AISI 316L, EPDM (CRN)
M	1/4 – 18 NPT IEC 61518, AISI 316L, Kalrez (CRN)
P	1/4 – 18 NPT IEC 61518, AISI 316L, Chemraz (CRN)
S	1/4 – 18 NPT IEC 61518, AISI 316L, FKM Viton, cleaned from oil and grease (CRN)
T	1/4 – 18 NPT IEC 61518, AISI 316L, FKM Viton, cleaned for oxygen service (CRN)
U	RC 1/4, AISI 316L, FKM Viton (CRN)

80	Process connection high-pressure side, material:
	EN/DIN flanges
B	DN 80 PN 10-40 B1, AISI 316L
D	DN 80 PN 10-40, AISI 316L with ECTFE coating Safety instructions, observe electrostatic charge!
E	DN 80 PN 10-40 B1, Alloy C276
F	DN 100 PN 10-16 B1, AISI 316L
G	DN 100 PN 25-40 B1, AISI 316L
H	DN 100 PN 25-40, AISI 316L with ECTFE coating Safety instructions, observe electrostatic charge!
J	DN 100 PN 25-40 B1, Alloy C276
L	DN 100 PN 10-16, AISI 316L with ECTFE coating Safety instructions, observe electrostatic charge!
M	DN 100 PN 10-16 B1, Alloy C276
	ANSI flanges
P	3" 150 lbs RF, AISI 316/316L (CRN)
R	3" 150 lbs, AISI 316/316L with ECTFE coating Safety instructions, observe electrostatic charge!
S	3" 150 lbs RF, Alloy C276 (CRN)
T	4" 150 lbs RF, AISI 316/316L (CRN)
U	4" 150 lbs, AISI 316/316L with ECTFE coating Safety instructions, observe electrostatic charge!
V	4" 150 lbs RF, Alloy C276 (CRN)
W	4" 300 lbs RF, AISI 316/316L (CRN)
	JIS flanges
1	10K 80A RF, AISI 316L
3	10K 80A RF, Alloy C276
4	10K 100A RF, AISI 316L

FMD76 (continued)

100	Additional option 1:
A	Not selected
E	SIL/IEC 61508 Declaration of Conformity
B	Material test certificate for wetted components, inspection certificate as per EN 10204 3.1 acc. to specification 52005759
M	Overvoltage protection
J	Software setting, see additional spec. Min alarm current HART burst mode PV Min alarm current + HART burst mode PV
N	HistoROM/M-DAT
S	GL/ABS marine certificate
3	Routine test with certificate, inspection certificate as per EN 10204 3.1

110	Additional option 2:
A	Not selected
E	SIL/IEC 61508 Declaration of Conformity
G	Separate housing, cable length see additional spec. + mounting bracket, wall/pipe, 316L (FM/CSA IS: for Div. 1 installation only)
K	Vent valves (2 pieces), Alloy C
M	Overvoltage protection
J	Software setting, see additional spec. Min alarm current HART burst mode PV Min alarm current + HART burst mode PV
N	HistoROM/M-DAT
R	Screws 7/16 UNF, length 1 1/2" (4 pieces) for oval flange adapter PZO
S	GL/ABS marine certificate
3	Routine test with certificate, inspection certificate as per EN 10204 3.1
5	Helium leak test EN 1518 with test certificate inspection certificate as per EN 10204 3.1

850	Firmware Version:
73	02.11.zz, HART, DevRev21
74	04.00.zz, FF, DevRev07
75	04.01.zz, PROFIBUS PA, DevRev03
76	02.10.zz, HART, DevRev21
77	03.00.zz, FF, DevRev06
78	04.00.zz, PROFIBUS PA

895	Identification:
Z1	Measuring point (TAG)
Z2	Bus address

FMD76	complete order code

FMD77

This overview does not mark options which are mutually exclusive.

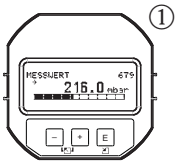

10	Approval:
A	For non-hazardous areas
1	ATEX II 1/2 G Ex ia IIC T6
6	ATEX II 1/2 G Ex ia IIC T6, Overfill prevention WHG
2	ATEX II 1/2 D
4	ATEX II 1/3 D
8	ATEX II 1 GD Ex ia IIC T6
3	ATEX II 1/2 GD Ex ia IIC T6
5	ATEX II 2 G Ex d IIC T6 Gb
7	ATEX II 3 G Ex nA II T6
S	FM IS, Class I, II, III Division 1, Groups A – G; NI Class I Division 2, Groups A – D; AEx ia
T	FM XP, Class I Division 1, Groups A – D; AEx d
Q	FM DIP, Class II, III Division 1, Groups E – G
R	FM NI, Class I, Division 2, Groups A – D
U	CSA IS, Class I, II, III Division 1, Groups A – G; Class I Division 2, Groups A – D, Ex ia
V	CSA XP, Class I Division 1, Groups B – D; Ex d
W	CSA Class II, III Division 1, Groups E – G (Dust-Ex)
G	NEPSI Ex d IIC T6
H	NEPSI Ex ia IIC T6
I	IECEx Zone 0/1 Ex ia IIC T6
M	IEC Ex d IIC T6 Gb
L	TIIS Ex do IIC T6
B	Combined certificates: ATEX II 1/2 G Ex ia IIC T6 + II G Ex d IIC T6
C	Combined certificates: FM IS and XP Class I Division 1, Groups A – D
D	Combined certificates: CSA IS and XP Class I Division 1, Groups A – D
E	Combined certificates: FM/CSA IS and XP Class I Division 1, Groups A – D
F	Combined certificates: ATEX II Ex ia / Ex d + FM/CSA IS + XP; ATEX II 1/2G Ex ia IIC T6+; ATEX II 2G Ex d IIC T6+; FM/CSA IS + XP Cl.I Div.1 Gr.A-D

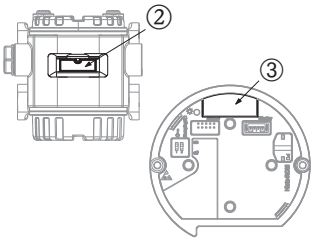

20		Output; Operation:
	A	4 to 20 mA HART, SIL operation outside, LCD (→ see Fig. ①, ②)
	B	4 to 20 mA HART, SIL operation inside, LCD (→ see Fig. ①, ③)
	C	4 to 20 mA HART, SIL operation inside (→ see Fig. ③)
	D	4 to 20 mA HART, SIL operation outside, Li=0, LCD (→ see Fig. ①, ②)
	E	4 to 20 mA HART, SIL operation inside, Li=0, LCD (→ see Fig. ①, ③)
	F	4 to 20 mA HART, SIL operation inside Li=0, (→ see Fig. ③)
	M	PROFIBUS PA, operation outside, LCD (→ see Fig. ①, ②)
	N	PROFIBUS PA, operation inside, LCD (→ see Fig. ①, ③)
	O	PROFIBUS PA, operation inside (→ see Fig. ③)
	P	FOUNDATION Fieldbus, operation outside, LCD (→ see Fig. ①, ②)
	Q	FOUNDATION Fieldbus, operation inside, LCD (→ see Fig. ①, ③)
	R	FOUNDATION Fieldbus, operation inside (→ see Fig. ③)

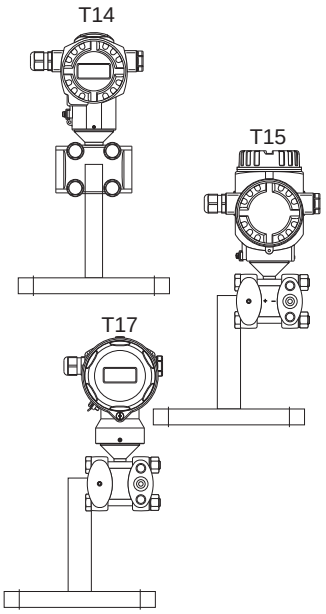

30			Housing; Cable entry; Protection:
		A	Aluminum T14 housing, optional display on the side, IP 66/67/NEMA 4X/ 6P, Gland M 20x1.5
		B	Aluminum T14 housing, optional display on the side, IP 66/67/NEMA 4X/ 6P, Thread G 1/2
		C	Aluminum T14 housing, optional display on the side, IP 66/67/NEMA 4X/ 6P, Thread 1/2 NPT
		D	Aluminum T14 housing, optional display on the side, IP 66/67/NEMA 4X/ 6P, M12x1 PA plug
		E	Aluminum T14 housing, optional display on the side, IP 66/67/NEMA 4X/ 6P, 7/8" FF plug
		F	Aluminum T14 housing, optional display on the side, IP 65/NEMA 4X, Han7D plug, 90°
		J	Aluminum T15 housing, optional display on the top, IP 66/67/NEMA 4X/ 6P, Gland M 20x1.5
		K	Aluminum T15 housing, optional display on the top, IP 66/67/NEMA 4X/ 6P, Thread G 1/2
		L	Aluminum T15 housing, optional display on the top, IP 66/67/NEMA 4X/ 6P, Thread 1/2 NPT
		M	Aluminum T15 housing, optional display on the top, IP 66/67/NEMA 4X/ 6P, M 12x1 PA plug
		N	Aluminum T15 housing, optional display on the top, IP 66/67/NEMA 4X/ 6P, 7/8" FF plug
		P	Aluminum T15 housing, optional display on the top, IP 65/NEMA 4X, Han7D plug, 90°
		1	AISI 316L T14 housing, optional display on the side, IP 66/67/NEMA 4X/ 6P, Gland M 20x1.5
		2	AISI 316L T14 housing, optional display on the side, IP 66/67/NEMA 4X/ 6P, Thread G 1/2
		3	AISI 316L T14 housing, optional display on the side, IP 66/67/NEMA 4X/ 6P, Thread 1/2 NPT
		4	AISI 316L T14 housing, optional display on the side, IP 66/67/NEMA 4X/ 6P, M 12x1 PA plug
		5	AISI 316L T14 housing, optional display on the side, IP 66/67/NEMA 4X/ 6P, 7/8" FF plug
		6	AISI 316L T14 housing, optional display on the side, IP 65/NEMA 4X, Han7D plug, 90°
		7	AISI 316L T14 housing, optional display on the side, IP66/67 NEMA6P; FVMQ; M20
		8	AISI 316L T14 housing, optional display on the side, IP66/67 NEMA6P; FVMQ; NPT1/2
		R	T17 316L Hygiene IP66/68 NEMA6P; M20 gland, T17 = side cover
		S	T17 316L Hygiene IP66/68 NEMA6P; G1/2 thread, T17 = side cover
		T	T17 316L Hygiene IP66/68 NEMA6P; NPT1/2 thread, T17 = side cover

U	T17 316L Hygiene IP66/68 NEMA6P; M12 plug, T17 = side cover
V	T17 316L Hygiene IP66/68 NEMA6P; 7/8" plug, T17 = side cover
Z	Housing: see additional specifications

FMD77 (continued)

40 — Nominal range; Cell body material and process isolating diaphragm material; PN:

	Nominal value	Material Cell body	Process isolating diaphragm	PN
2D	100 mbar/10 kPa/1.5 psi	AISI 316L (1.4404)	AISI 316L (1.4404)	160 bar/16 MPa/2400 psi
2F	500 mbar/50 kPa/7.5 psi	AISI 316L (1.4404)	AISI 316L (1.4404)	160 bar/16 MPa/2400 psi
2H	3 bar/300 kPa/45 psi	AISI 316L (1.4404)	AISI 316L (1.4404)	160 bar/16 MPa/2400 psi
2L	16 bar/1.6 MPa/240 psi	AISI 316L (1.4404)	AISI 316L (1.4404)	160 bar/16 MPa/2400 psi
7D	100 mbar/10 kPa/1.5 psi	AISI 304 (1.4301)	AISI 316L (1.4404)	160 bar/16 MPa/2400 psi
7F	500 mbar/50 kPa/7.5 psi	AISI 304 (1.4301)	AISI 316L (1.4404)	160 bar/16 MPa/2400 psi
7H	3 bar/300 kPa/45 psi	AISI 304 (1.4301)	AISI 316L (1.4404)	160 bar/16 MPa/2400 psi
7L	16 bar/1.6 MPa/240 psi	AISI 304 (1.4301)	AISI 316L (1.4404)	160 bar/16 MPa/2400 psi

50 — Calibration; Unit:

1	Nominal range; mbar/bar
2	Nominal range; kPa/MPa
3	Nominal range; mmH_2O/mH_2O
4	Nominal range; inH_2O/ftH_2O
6	Nominal range; psi
B	Customer-specific; see additional specification
C	Factory calibration certificate, 5-point; see additional specification
D	DKD/DAkkS certificate; see additional specification
E	Customised pressure; see additional specification
F	Customised level; see additional specification
H	Customised pressure + 5-point works calibration certificate; see additional specification
I	Customised level + 5-point works calibration certificate; see additional specification

60 — Process isolating diaphragm material (high-pressure side):

1	AISI 316L
2	Alloy C
3	Monel
5	Tantalum
6	AISI 316L with gold-rhodium coating
7	AISI 316L with 0.09 mm PTFE foil (not for vacuum applications)

70 — Process connection low-pressure side; Material; Seal:

	Mounting: 7/16 – 20 UNF, Process isolating diaphragm low-pressure side AISI 316L
B	1/4 – 18 NPT IEC 61518, C22.8, FKM Viton (CRN)
D	1/4 – 18 NPT IEC 61518, AISI 316L, FKM Viton (CRN)
F	1/4 – 18 NPT IEC 61518, Alloy C276, FKM Viton (CRN)
H	1/4 – 18 NPT IEC 61518, AISI 316L, PTFE+C4-ring (CRN)
J	1/4 – 18 NPT IEC 61518, Alloy C, PTFE+C4-ring (CRN)
K	1/4 – 18 NPT IEC 61518, AISI 316L, EPDM (CRN)
L	1/4 – 18 NPT IEC 61518, Alloy C, EPDM (CRN)
M	1/4 – 18 NPT IEC 61518, AISI 316L, Kalrez (CRN)
N	1/4 – 18 NPT IEC 61518, Alloy C, Kalrez (CRN)
P	1/4 – 18 NPT IEC 61518, AISI 316L, Chemraz (CRN)
Q	1/4 – 18 NPT IEC 61518, Alloy C, Chemraz (CRN)
S	1/4 – 18 NPT IEC 61518, AISI 316L, FKM Viton, cleaned from oil and grease (CRN)
T	1/4 – 18 NPT IEC 61518, AISI 316L, FKM Viton, cleaned for oxygen service (CRN)
U	RC 1/4, AISI 316L, FKM Viton (CRN)

80 — Process connection high-pressure side, material:

	EN/DIN flanges
A	DN 50 PN 10-40 B1, AISI 316L
B	DN 80 PN 10-40 B1, AISI 316L
C	DN 80 PN 10-40 B1, extended diaphragm seal: 50 mm/100 mm/200 mm
F	DN 100 PN 10-16 B1, AISI 316L
G	DN 100 PN 25-40 B1, AISI 316L
	ANSI flanges
N	2" 150 lbs, RF, AISI 316/316L (CRN)
P	3" 150 lbs, RF, AISI316/ 316L (CRN)
Q	3" 150 lbs, RF, AISI 316/316L, extended diaphragm seal: 2"/4"/6"/8"
T	4" 150 lbs, RF, AISI 316L (CRN)
5	3" 150 lbs, RF, compact, 316/316L, flange ANSI B16.5

80	Process connection high-pressure side, material:
7	3" 150 lbs, RF, compact, 316/316L, extended diaphragm seal: 2"/4"/6"/8", flange ANSI B16.5 see additional specification
6	3" 300 lbs, RF, compact, 316/316L, flange ANSI B16.5
8	4" 150 lbs, RF, compact, 316/316L, flange ANSI B16.5
W	4" 300 lbs, RF, AISI 316L (CRN)
	JIS flanges
X	10K 50A RF, AISI 316L
1	10K 80A RF, AISI 316L
4	10K 100 A RF, AISI 316L

FMD77 (continued)

90	Fill fluid:
A	Silicone oil
D	Vegetable oil
L	Low-temperature oil
V	High-temperature oil
F	Inert oil

100	Additional option 1:
A	Not selected
E	SIL/IEC 61508 Declaration of Conformity
B	Material test certificate for wetted components, inspection certificate as per EN 10204 3.1 acc. to specification 52005759
C	NACE MR0175 (wetted parts)
D	Material test certificate for wetted components as per EN 10204 3.1 and NACE MR0175 material, inspection certificate as per EN 10204 acc. to specification 52010806
M	Overvoltage protection
J	Software setting, see additional spec. Min alarm current HART burst mode PV Min alarm current + HART burst mode PV
N	HistoROM/M-DAT
3	Routine test with certificate, inspection certificate as per EN 10204 3.1
4	Overpressure test with certificate, inspection certificate as per EN 10204 3.1

110	Additional option 2:
A	Not selected
E	SIL/IEC 61508 Declaration of Conformity
G	Separate housing, cable length see additional spec. + mounting bracket, wall/pipe, 316L (FM/CSA IS: for Div. 1 installation only)
M	Overvoltage protection
J	Software setting, see additional spec. Min alarm current HART burst mode PV Min alarm current + HART burst mode PV
N	HistoROM/M-DAT
R	Screws 7/16 UNF, length 1 1/2" (4 pieces) for oval flange adapter PZO
3	Routine test with certificate, inspection certificate as per EN 10204 3.1
4	Overpressure test with certificate, inspection certificate as per EN 10204 3.1

850	Firmware Version:
73	02.11.zz, HART, DevRev21
74	04.00.zz, FF, DevRev07
75	04.01.zz, PROFIBUS PA, DevRev03
76	02.10.zz, HART, DevRev21
77	03.00.zz, FF, DevRev06
78	04.00.zz, PROFIBUS PA

895	Identification:
Z1	Measuring point (TAG)
Z2	Bus address

FMD77	complete order code

FMD78

This overview does not mark options which are mutually exclusive.

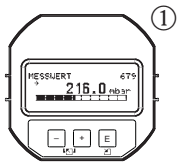

10	Approval:
A	For non-hazardous areas
1	ATEX II 1/2 G Ex ia IIC T6
6	ATEX II 1/2 G Ex ia IIC T6, Overfill prevention WHG
2	ATEX II 1/2 D
4	ATEX II 1/3 D
8	ATEX II 1 GD Ex ia IIC T6
3	ATEX II 1/2 GD Ex ia IIC T6
5	ATEX II 2 G Ex d IIC T6 Gb
7	ATEX II 3 G Ex nA II T6
S	FM IS, Class I, II, III Division 1, Groups A – G; NI Class I Division 2, Groups A – D; AEx ia
T	FM XP, Class I Division 1, Groups A – D; AEx d
Q	FM DIP, Class II, III Division 1, Groups E – G
R	FM NI, Class I, Division 2, Groups A – D
U	CSA IS, Class I, II, III Division 1, Groups A – G; Class I Division 2, Groups A – D, Ex ia
V	CSA XP, Class I Division 1, Groups B – D; Ex d
W	CSA Class II, III Division 1, Groups E – G (Dust-Ex)
G	NEPSI Ex d IIC T6
H	NEPSI Ex ia IIC T6
I	IECEx Zone 0/1 Ex ia IIC T6
M	IEC Ex d IIC T6 Gb
L	TIIS Ex do IIC T6
B	Combined certificates: Combined certificates: ATEX II 1/2 G Ex ia IIC T6 + II G Ex d IIC T6
C	Combined certificates: FM IS and XP Class I Division 1, Groups A – D
D	Combined certificates: CSA IS and XP Class I Division 1, Groups A – D
E	Combined certificates: FM/CSA IS and XP Class I Division 1, Groups A – D
F	Combined certificates: ATEX II Ex ia / Ex d + FM/CSA IS + XP; ATEX II 1/2G Ex ia IIC T6+; ATEX II 2G Ex d IIC T6+; FM/CSA IS + XP Cl.I Div.1 Gr.A-D

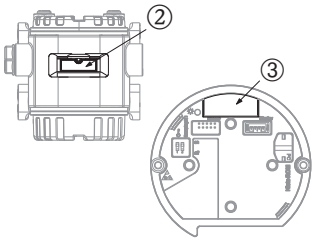

20	Output; Operation:
A	4 to 20 mA HART, SIL operation outside, LCD (→ see Fig. ①, ②)
B	4 to 20 mA HART, SIL operation inside, LCD (→ see Fig. ①, ③)
C	4 to 20 mA HART, SIL operation inside (→ see Fig. ③)
D	4 to 20 mA HART, SIL operation outside, Li=0, LCD (→ see Fig. ①, ②)
E	4 to 20 mA HART, SIL operation inside, Li=0, LCD (→ see Fig. ①, ③)
F	4 to 20 mA HART, SIL operation inside Li=0, (→ see Fig. ③)
M	PROFIBUS PA, operation outside, LCD (→ see Fig. ①, ②)
N	PROFIBUS PA, operation inside, LCD (→ see Fig. ①, ③)
O	PROFIBUS PA, operation inside (→ see Fig. ③)
P	FOUNDATION Fieldbus, operation outside, LCD (→ see Fig. ①, ②)
Q	FOUNDATION Fieldbus, operation inside, LCD (→ see Fig. ①, ③)
R	FOUNDATION Fieldbus, operation inside (→ see Fig. ③)

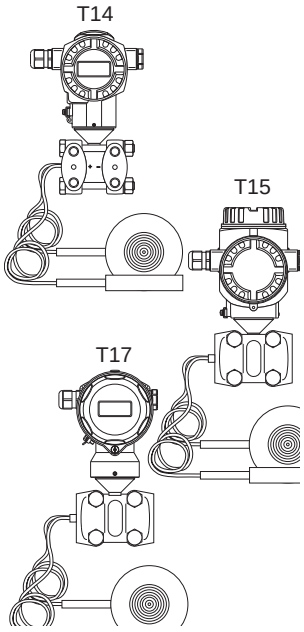

30	Housing; Cable entry; Protection:
A	Aluminum T14 housing, optional display on the side, IP 66/67/NEMA 4X/ 6P, Gland M 20x1.5
B	Aluminum T14 housing, optional display on the side, IP 66/67/NEMA 4X/ 6P, Thread G 1/2
C	Aluminum T14 housing, optional display on the side, IP 66/67/NEMA 4X/ 6P, Thread 1/2 NPT
D	Aluminum T14 housing, optional display on the side, IP 66/67/NEMA 4X/ 6P, M12x1 PA plug
E	Aluminum T14 housing, optional display on the side, IP 66/67/NEMA 4X/ 6P, 7/8" FF plug
F	Aluminum T14 housing, optional display on the side, IP 65/NEMA 4X, Han7D plug, 90°
J	Aluminum T15 housing, optional display on the top, IP 66/67/NEMA 4X/ 6P, Gland M 20x1.5
K	Aluminum T15 housing, optional display on the top, IP 66/67/NEMA 4X/ 6P, Thread G 1/2
L	Aluminum T15 housing, optional display on the top, IP 66/67/NEMA 4X/ 6P, Thread 1/2 NPT
M	Aluminum T15 housing, optional display on the top, IP 66/67/NEMA 4X/ 6P, M 12x1 PA plug
N	Aluminum T15 housing, optional display on the top, IP 66/67/NEMA 4X/ 6P, 7/8" FF plug
P	Aluminum T15 housing, optional display on the top, IP 65/NEMA 4X, Han7D plug, 90°
1	AISI 316L T14 housing, optional display on the side, IP 66/67/NEMA 4X/ 6P, Gland M 20x1.5
2	AISI 316L T14 housing, optional display on the side, IP 66/67/NEMA 4X/ 6P, Thread G 1/2
3	AISI 316L T14 housing, optional display on the side, IP 66/67/NEMA 4X/ 6P, Thread 1/2 NPT
4	AISI 316L T14 housing, optional display on the side, IP 66/67/NEMA 4X/ 6P, M 12x1 PA plug
5	AISI 316L T14 housing, optional display on the side, IP 66/67/NEMA 4X/ 6P, 7/8" FF plug
6	AISI 316L T14 housing, optional display on the side, IP 65/NEMA 4X, Han7D plug, 90°
7	AISI 316L T14 housing, optional display on the side, IP66/67 NEMA6P; FVMQ; M20
8	AISI 316L T14 housing, optional display on the side, IP66/67 NEMA6P; FVMQ; NPT1/2
R	T17 316L Hygiene IP66/68 NEMA6P; M20 gland, T17 = side cover
S	T17 316L Hygiene IP66/68 NEMA6P; G1/2 thread, T17 = side cover
T	T17 316L Hygiene IP66/68 NEMA6P; NPT1/2 thread, T17 = side cover

U	T17 316L Hygiene IP66/67 NEMA6P; M12 plug, T17 = side cover
V	T17 316L Hygiene IP66/68 NEMA6P; 7/8" plug, T17 = side cover
Z	Housing: see additional specifications

FMD78 (continued)

40 — Nominal range; Cell body material; PN:

	Nominal value	Cell body material	PN
2D	100 mbar/10 kPa/1.5 psi	AISI 316L (1.4404)	160 bar/16 MPa/2400 psi
2F	500 mbar/50 kPa/7.5 psi	AISI 316L (1.4404)	160 bar/16 MPa/2400 psi
2H	3 bar/300 kPa/45 psi	AISI 316L (1.4404)	160 bar/16 MPa/2400 psi
2L	16 bar/1.6 MPa/240 psi	AISI 316L (1.4404)	160 bar/16 MPa/2400 psi
2M	40 bar/4 MPa/600 psi	AISI 316L (1.4404)	160 bar/16 MPa/2400 psi
7D	100 mbar/10 kPa/1.5 psi	AISI 304 (1.4301)	160 bar/16 MPa/2400 psi
7F	500 mbar/50 kPa/7.5 psi	AISI 304 (1.4301)	160 bar/16 MPa/2400 psi
7H	3 bar/300 kPa/45 psi	AISI 304 (1.4301)	160 bar/16 MPa/2400 psi
7L	16 bar/1.6 MPa/240 psi	AISI 304 (1.4301)	160 bar/16 MPa/2400 psi
7M	40 bar/4 MPa/600 psi	AISI 304 (1.4301)	160 bar/16 MPa/2400 psi

50 — Calibration; Unit:

1	Nominal range; mbar/bar
2	Nominal range; kPa/MPa
3	Nominal range; mmH_2O/mH_2O
4	Nominal range; inH_2O/ftH_2O
6	Nominal range; psi
B	Customer-specific; see additional specification
C	Factory calibration certificate, 5-point; see additional specification
D	DKD/DAkkS certificate; see additional specification
E	Customised pressure; see additional specification
F	Customised level; see additional specification
H	Customised pressure + 5-point works calibration certificate; see additional specification
I	Customised level + 5-point works calibration certificate; see additional specification

60 — Process isolating diaphragm material:

1	AISI 316L
2	Alloy C
3	Monel
5	Tantalum
6	AISI 316L with gold-rhodium coating
7	AISI 316L with 0.09 mm PTFE foil (not for vacuum applications)

80 — Process connection; Material:

	Diaphragm seal cell structure
UF	Cell DN 50 PN 16-400, AISI 316L
UH	Cell DN 80 PN 16-400, AISI 316L
UJ	Cell DN 100 PN 16-400, AISI 316L
VF	Cell 2" 150-2500 lbs, AISI 316L (CRN)
VH	Cell 3" 150-2500 lbs, AISI 316L (CRN)
VJ	Cell 4" 150-2500 lbs, AISI 316L (CRN)
	Threaded connections
GA	Thread ISO 228 G 1/2 B, PN 40, AISI 316L, separator, PTFE seal
RL	Thread ANSI 1/2 MNPT, PN 40, AISI 316L, separator, PTFE seal
	Clamp connections
TB	Tri-Clamp, ISO 2852 DN 25 (1"), DIN 32676 DN 25, EHEDG, 3A, AISI 316L
TC	Tri-Clamp, ISO 2852 DN 38 (1 – 1 1/2"), DIN 32676 DN 40, EHEDG, 3A, AISI 316L
TD	Tri-Clamp, ISO 2852 DN 51 (2"), DIN 32676 DN 50, EHEDG, 3A, AISI 316L
TF	Tri-Clamp, ISO 2852 DN 76.1 (3"), EHEDG, 3A, AISI 316L
	Hygienic connections
TR	Varivent model N for pipes DN 40 – DN 162, PN 40, EHEDG, 3A, AISI 316L
TK	DRD DN50 (65 mm), PN 25, AISI 316L
WH	Sanitary tank spud, 3A, AISI 316L, extended diaphragm seal 2"
MR	DIN 11851 DN 50 PN 25 slotted nut, EHEDG, 3A, AISI 316L
MS	DIN 11851 DN 65 PN 25 slotted nut, EHEDG, 3A, AISI 316L
MT	DIN 11851 DN 80 PN 25 slotted nut, EHEDG, 3A, AISI 316L
	EN/DIN flanges
B3	DN 50 PN 10-40 B1, AISI 316L
B5	DN 80 PN 10-40 B1, AISI 316L
BT	DN 100 PN 10-16 B1, AISI 316L
B6	DN 100 PN 25-40 B1, AISI 316L

FMD78 (continued)

80	Process connection; Material (continued):
	ANSI flanges
AF	2" 150 lbs RF, AISI 316/316L (CRN)
AR	2" 300 lbs RF, AISI 316/316L (CRN)
AG	3" 150 lbs RF, AISI 316/316L (CRN)
AS	3" 300 lbs RF, AISI 316/316L (CRN)
J4	3" 150 lbs RF, AISI 316/316L, extended diaphragm seal: 2"/4"/6"/8" (CRN), see additional specification
AH	4" 150 lbs RF, AISI 316/316L (CRN)
AT	4" 300 lbs RF, AISI 316/316L (CRN)
J5	4" 150 lbs RF, AISI 316/316L, extended diaphragm seal: 2"/4"/6"/8" (CRN), see additional specification
	JIS flanges
KF	10K 50A RF, AISI 316L
KL	10K 80A RF, AISI 316L
KH	10K 100A RF, AISI 316L

90	Capillary length; Fill fluid:
1	... m capillary; silicone oil
2	... m capillary; vegetable oil
3	... m capillary; high-temperature oil
4	... m capillary; inert oil for oxygen service
5	... m capillary; low-temperature oil
A	... ft capillary; silicone oil
B	... ft capillary; vegetable oil
C	... ft capillary; high-temperature oil
D	... ft capillary; inert oil for oxygen service
E	... ft capillary; low-temperature oil

100	Additional option 1:
A	Not selected
E	SIL/IEC 61508 Declaration of Conformity
B	Material test certificate for wetted components, inspection certificate as per EN 10204 acc. to specification 52005759
C	NACE MR0175 (wetted parts)
D	Material test certificate for wetted components as per EN 10204 3.1 and NACE MR0175 material, inspection certificate as per EN 10204 acc. to specification 52010806
M	Overvoltage protection
J	Software setting, see additional spec. Min alarm current HART burst mode PV Min alarm current + HART burst mode PV
N	HistoROM/M-DAT
S	GL/ABS marine certificate
U	Mounting bracket, wall/pipe, 316L
3	Routine test with certificate, inspection certificate as per EN 10204 3.1
4	Overpressure test with certificate, inspection certificate as per EN 10204 3.1
6	EN10204-3.1 material wetted parts +Ra, Ra= surface roughness, dimensinoal check, inspection certificate
8	EN10204-3.1 Delta-Ferrit content test, inspection certificate

FMD78 (continued)

110	Additional option 2:
A	Not selected
E	SIL/IEC 61508 Declaration of Conformity
G	Separate housing, cable length see additional spec. + mounting bracket, wall/pipe, 316L (FM/CSA IS: for Div. 1 installation only)
M	Overvoltage protection
J	Software setting, see additional spec. Min alarm current HART burst mode PV Min alarm current + HART burst mode PV
N	HistoROM/M-DAT
R	4x screw UNF7/16, length 1-1/2"
S	GL/ABS marine certificate
U	Mounting bracket for wall/pipe, AISI 316L
3	Routine test with certificate, inspection certificate as per EN 10204 3.1
4	Overpressure test with certificate, inspection certificate as per EN 10204 3.1
6	EN10204-3.1 material wetted parts +Ra, Ra= surface roughness, dimensinoal check, inspection certificate
8	EN10204-3.1 Delta-Ferrit content test, inspection certificate

850	Firmware Version:
73	02.11.zz, HART, DevRev21
74	04.00.zz, FF, DevRev07
75	04.01.zz, PROFIBUS PA, DevRev03
76	02.10.zz, HART, DevRev21
77	03.00.zz, FF, DevRev06
78	04.00.zz, PROFIBUS PA

895	Identification:
Z1	Measuring point (TAG)
Z2	Bus address

FMD78	complete order code

Additional documentation

Field of Activities

- Pressure measurement, powerful instruments for process pressure, differential pressure, level and flow: FA00004P/00/EN

Technical Information

- Deltapilot S: TI00416P/00/EN
- Cerabar S: TI00383P/00/EN
- Deltatop:
  - Orifice plate (TI00422P/00/EN)
  - Pitot tube (TI00425P/00/EN)
- EMC test procedures: TI00241F/00/EN

Operating Instructions

4 to 20 mA HART:
- Deltabar S: BA00270P/00/EN
- Description of device functions Cerabar S/Deltabar S/Deltapilot S: BA00274P/00/EN

PROFIBUS PA:
- Deltabar S: BA00294P/00/EN
- Description of device functions Cerabar S/Deltabar S/Deltapilot S: BA00296P/00/EN

FOUNDATION Fieldbus:
- Deltabar S: BA00301P/00/EN
- Description of device functions Cerabar S/Deltabar S/Deltapilot S: BA00303P/00/EN

Brief Operating Instructions

- 4 to 20 mA HART, Deltabar S: KA01018P/00/EN
- PROFIBUS PA, Deltabar S: KA01021P/00/EN
- FOUNDATION Fieldbus, Deltabar S: KA01024P/00/EN

Functional safety manual (SIL)

- Deltabar S (4 to 20 mA): SD00189P/00/EN

Safety Instructions

Certificate/type of protection	Device	Electronic insert	Documentation	Version in the order code
ATEX II 1/2 G Ex ia IIC T6 (WHG)	PMD70, PMD75, FMD76, FMD77, FMD78	– 4 to 20 mA HART, PROFIBUS PA, FOUNDATION Fieldbus	– XA00235P	1 (6)
ATEX II 1/2 D	PMD70, PMD75, FMD77, FMD78	– 4 to 20 mA HART – PROFIBUS PA, FOUNDATION Fieldbus	– XA00237P – XA00280P	2
ATEX II 1/2 D Ex ia IIC T6	FMD76	– 4 to 20 mA HART – PROFIBUS PA, FOUNDATION Fieldbus	– XA00238P – XA00281P	2
ATEX II 1/3 D	PMD70, PMD75, FMD77, FMD78	– 4 to 20 mA HART – PROFIBUS PA, FOUNDATION Fieldbus	– XA00239P – XA00282P	4
ATEX II 2 G Ex d IIC T6 Gb	PMD75, FMD77, FMD78	– 4 to 20 mA HART, PROFIBUS PA, FOUNDATION Fieldbus	– XA00240P	5
ATEX II 3 G Ex nA II T6	PMD70, PMD75, FMD76, FMD77, FMD78	– 4 to 20 mA HART, PROFIBUS PA, FOUNDATION Fieldbus	– XA00241P	7
ATEX II 1/2 GD Ex ia IIC T6	PMD70, PMD75, FMD76, FMD77, FMD78	– 4 to 20 mA HART, PROFIBUS PA, FOUNDATION Fieldbus	– XA00243P	3
ATEX II 1 GD Ex ia IIC T6	PMD70, PMD75, FMD76, FMD77, FMD78	– 4 to 20 mA HART, PROFIBUS PA, FOUNDATION Fieldbus	– XA00275P	8
ATEX II 1/2 G Ex ia IIC T6 + ATEX II 2 G Ex d IIC T6	PMD75, FMD77, FMD78	– 4 to 20 mA HART, PROFIBUS PA, FOUNDATION Fieldbus	– XA00242P	B
ATEX II Ex ia + FM IS + CSA IS ATEX II 1/2 G Ex ia IIC T6 + FM/CSA IS Cl.I,II,III Div.1 Gr.A-G FM: Zone 0,1,2/CSA: Zone 0,1,2	PMD70, FMD76	– 4 to 20 mA HART – PROFIBUS PA, FOUNDATION Fieldbus	– XA00235P, XA01058P, ZD00142P – XA00235P, XA01060P, ZD00189P	E

Certificate/type of protection	Device	Electronic insert	Documentation	Version in the order code
ATEX II Ex ia / Ex d + FM/CSA IS + XP ATEX II 1/2G Ex ia IIC T6+ ATEX II 2G Ex d IIC T6+ FM/CSA IS + XP Cl.I Div.1 Gr.A-D	PMD75, FMD77, FMD78	– 4 to 20 mA HART – PROFIBUS PA, FOUNDATION Fieldbus	– XA00242P, ZD00153P, XA01196P – XA00242P, XA01198P, ZD00191P	F
IECEx Zone 0/1 Ex ia IIC T6	PMD70, PMD75, FMD76, FMD77, FMD78	– 4 to 20 mA HART, PROFIBUS PA, FOUNDATION Fieldbus	– XB00004P	I
IEC Ex d IIC T6 Gb	PMD75, FMD77, FMD78	– 4...20 mA HART, PROFIBUS PA, FOUNDATION Fieldbus	– XA00512P	M
NEPSI Ex ia IIC T6	PMD70, PMD75, FMD76, FMD77, FMD78	– 4 to 20 mA HART, PROFIBUS PA, FOUNDATION Fieldbus	– XA00550P	H
NEPSI Ex d IIC T6	PMD75, FMD77, FMD78	– 4 to 20 mA HART, PROFIBUS PA, FOUNDATION Fieldbus	– XA00552P	G

Installation/Control Drawings

Certificate/type of protection	Device	Electronic insert	Documentation	Version in the order code
FM IS Class I, II, III, Division 1, Groups A – G; NI, Class I Division 2, Groups A – D; AEx ia	PMD70, PMD75, FMD76, FMD77, FMD78	– 4 to 20 mA HART – PROFIBUS PA, FOUNDATION Fieldbus	– XA01058P – XA01060P	S
CSA IS Class I, II, III, Division 1, Groups A – G; Class I Division 2, Groups A – G	PMD70, PMD75, FMD76, FMD77, FMD78	– 4 to 20 mA HART – PROFIBUS PA, FOUNDATION Fieldbus	– ZD00142P – ZD00189P	U
FM IS + XP Class I, Division 1, Groups A – D	PMD75, FMD77, FMD78	– 4 to 20 mA HART – PROFIBUS PA, FOUNDATION Fieldbus	– XA01196P – XA01198P	C
FM NI Cl.I Div.2 Groups A - D, Zone 2	PMD70, PMD75, FMD76, FMD77, FMD78	– 4...20 mA HART, PROFIBUS PA, FOUNDATION Fieldbus	– XA01064P	R
FM XP Cl.I Div.1 Groups A - D, AEx d, Zone 1,2	PMD75, FMD77, FMD78	– 4...20 mA HART, PROFIBUS PA, FOUNDATION Fieldbus	– XA01071P	T
CSA IS + XP Class I, Division 1, Groups A – D	PMD75, FMD77, FMD78	– 4 to 20 mA HART – PROFIBUS PA, FOUNDATION Fieldbus	– ZD00153P – ZD00191P	D
ATEX II Ex ia + FM IS + CSA IS ATEX II 1/2 G Ex ia IIC T6 + FM/CSA IS Cl.I,II,III Div.1 Gr.A-G FM: Zone 0,1,2/CSA: Zone 0,1,2	PMD70, FMD76	– 4 to 20 mA HART – PROFIBUS PA, FOUNDATION Fieldbus	– XA00235P, XA01058P, ZD00142P – XA00235P, XA01060P, ZD00189P	E
ATEX II Ex ia / Ex d + FM/CSA IS + XP ATEX II 1/2G Ex ia IIC T6+ ATEX II 2G Ex d IIC T6+ FM/CSA IS + XP Cl.I Div.1 Gr.A-D	PMD75, FMD77, FMD78	– 4 to 20 mA HART – PROFIBUS PA, FOUNDATION Fieldbus	– XA00242P, ZD00153P, XA01196P – XA00242P, XA01198P, ZD00191P	F
CSA XP Cl.I Div.1 Gr.B-D, Ex d, Zone 1,2	PMD75, FMD77, FMD78	– 4 to 20 mA HART, PROFIBUS PA, FOUNDATION Fieldbus	– ZD00229P	V

Overfill prevention

- WHG: ZE00259P/00/DE

Configuration data sheet

Pressure

The following configuration data sheet has to be filled in and to be included in the order when the option "E – Customised pressure" or the option "H – Customised pressure + 5-point works calibration certificate" has been selected in feature 50 "Calibration; Unit" of the product structure.

Pressure Engineerung Unit

❑ mbar	❑ mmH_2O	❑ mmHg	❑ Pascal	❑ torr
❑ bar	❑ mH_2O	❑ inHg	❑ hPa	
	❑ ftH_2O		❑ kPa	❑ g/cm^2
❑ psi	❑ inH_2O	❑ gf/cm^2	❑ MPa	❑ kg/cm^2
		❑ kgf/cm^2		
				❑ lb/ft^2
				❑ atm

Calibration Range / Output

Low range value (LRV): _____ [pressure engineering unit)]
Upper range value (URV): _____ [pressure engineering unit)]

Display Information

Display the contents of the main line [1)]
❑ Main Value [PV] (Default)
❑ Main Value [%]
❑ Pressure
❑ Current [mA] (HART only)
❑ Temperature
❑ Error number
❑ Alternating display

[1)] Depending on sensor and comunication variant

Damping

Damping: _____ sec (Default 2 sec)

Note!
Smallest span (factory calibration) → 🗎 8.

Level

The following configuration data sheet has to be filled in and to be included in the order when the option "F – Customised level" or the option "I – Customised level + 5-point works calibration certificate" has been selected in feature 50 "Calibration; Unit" of the product structure.

Pressure Engineering Unit

❏ mbar
❏ bar
❏ psi
❏ mmH_2O
❏ mH_2O
❏ ftH_2O
❏ inH_2O
❏ mmHg
❏ inHg
❏ gf/cm^2
❏ kgf/cm^2
❏ Pascal
❏ hPa
❏ kPa
❏ MPa
❏ torr
❏ g/cm^2
❏ kg/cm^2
❏ lb/ft^2
❏ atm

Output Unit (Scaled unit)

Mass	Length	Volume	Volume	Percent
❏ kg	❏ m	❏ l	❏ USgal	❏ %
❏ t	❏ dm	❏ hl	❏ impgal	
❏ lb	❏ cm		❏ USbblPETR	
	❏ mm	❏ m^3		
		❏ ft^3		
	❏ ft			
	❏ inch			

Empty pressure [a]:
Low pressure value (empty) _____ [pres. eng. unit]

Full pressure [b]:
High pressure value (full) _____ [pres. eng. unit]

Empty calibration [a]:
Low level value (empty) _____ [Scaled Unit]

Full calibration [b]:
High level value (full) _____ [Scaled Unit]

Example

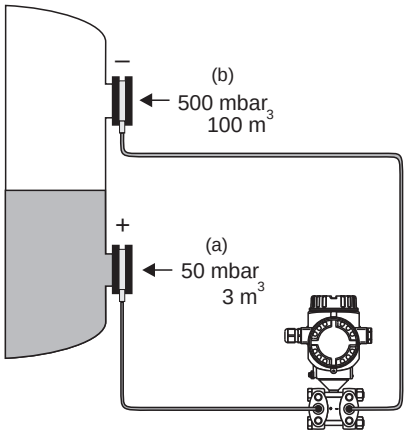

Display Information

Display the contents of the main line [1)]
❏ Main Value [PV] (Default)
❏ Main Value [%]
❏ Pressure
❏ Current [mA] (HART only)
❏ Temperature
❏ Level before lin.
❏ Tank content
❏ Error number
❏ Alternating display

[1)] Depending on sensor and comunication variant

Damping

Damping: _____ sec (Default 2 sec)

Flow

The following configuration data sheet has to be filled in and to be included in the order when the option "G – Customised flow" or the option "J – Customised flow + 5-point works calibration certificate" has been selected in feature 50 "Calibration; Unit" of the product structure.

Pressure Engineering Unit

❑ mbar
❑ bar
❑ psi
❑ mmH_2O
❑ mH_2O
❑ ftH_2O
❑ inH_2O
❑ mmHg
❑ inHg
❑ gf/cm^2
❑ kgf/cm^2
❑ Pascal
❑ hPa
❑ kPa
❑ MPa
❑ torr
❑ g/cm^2
❑ kg/cm^2
❑ lb/ft^2
❑ atm

Flow Unit / Measured Value (PV)

❑ Mass	❑ Volume Operation Condition	❑ Volume Norm Condition	❑ Volume Standard Condition
❑ kg/s	❑ m^3/s	❑ Nm^3/s	❑ Sm^3/s
❑ kg/min	❑ m^3/min	❑ Nm^3/min	❑ Sm^3/min
❑ kg/h	❑ m^3/h	❑ Nm^3/h	❑ Sm^3/h
❑ t/s	❑ l/s	❑ Nm^3/d	❑ Sm^3/d
❑ t/min	❑ l/min		❑ Scf/s
❑ t/h	❑ l/h		❑ Scf/min
❑ oz/s	❑ US Gal/s		❑ Scf/h
❑ oz/min	❑ US Gal/min		❑ Scf/d
❑ lb/s	❑ US Gal/h		
❑ lb/min	❑ ACFS		
❑ lb/h	❑ ACFM		
	❑ ACFH		

Output Characteristic

❑ linear (HART only)

Operation Point
Max Pressure _____ [pressure eng. unit]
Max Flow _____ [flow unit]
LRV _____ [pressure eng. unit]
(Lower Range Value (HART only))

❑ square root (HART only)

Operation Point
Max Pressure _____ [pressure eng. unit]
Max Flow _____ [flow unit]
LRV _____ [flow unit]
(Lower Range Value (HART only))

Low flow cut off

Value: _____ [%] (default = 5%)

Display Information

Display the contents of the main line [1)]
❑ Main Value [PV] (Default)
❑ Main Value [%]
❑ Pressure
❑ Current [mA] (HART only)
❑ Temperature
❑ Flow
❑ Totalizer 1
❑ Totalizer 2
❑ Error number
❑ Alternating display

[1)] Depending on sensor and comunication variant

Damping

Damping: _____ sec (Default 2 sec)

Registered trademarks

HART®	Registered trademark of the HART Communication Foundation, Austin, USA
PROFIBUS®	Registered trademark of the PROFIBUS User Organization, Karlsruhe, Germany
FOUNDATION™ Fieldbus	Registered trademark of the Fieldbus Foundation, Austin, Texas, USA

Patents

This product may be protected by at least one of the following patents.
Further patents are pending.

US Patents	EP Patents	DE Patents
		DE 203 11 320 U1
US 6,631,644 A1	EP 1 299 701 B1	
US 5,670,063 A1	EP 0 516 579 B1	
US 5,539,611 A1		
US 5,050,034 A1	EP 0 445 382 B1	
US 5,097,712 A1	EP 0 420 105 B1	
US 5,050,035 A1	EP 0 414 871 B1	
US 5,005,421 A1	EP 0 351 701 B1	
	EP 0 414 871 B1	
US 5,334,344 A1	EP 0 490 807 B1	
US 6,703,943 A1		
US 5,499,539 A1	EP 0 613 552 B1	

Instruments International

Endress+Hauser
Instruments International AG
Kaegenstrasse 2
4153 Reinach
Switzerland

Tel.+41 61 715 81 00
Fax+41 61 715 25 00
www.endress.com
info@ii.endress.com

Endress+Hauser
People for Process Automation

TI00382P/00/EN/18.14
No 71244890
CSS/FM+SGML 9

71244890